İZMİR KÂTİP ÇELEBİ ÜNİVERSİTESİ
2010
GRADUATE SCHOOL OF NATURAL AND APPLIED SCIENCES

# Development of Body Position and Muscle State Analyzing Personal Trainer Device with Mobile App Support

Submitted to the Graduate School of Natural and Applied Sciences in partial fulfillment of the requirements for the degree of

Master of Science

in Biomedical Engineering

by

Onuralp ARSLAN

ORCID 0000-0001-7512-0224

Advisor: Assoc. Prof. Dr. Yalçın İşler

December, 2023

This is to certify that we have read the thesis **Development of Body Position and Muscle State Analyzing Personal Trainer Device with Mobile App Support** submitted by **Onuralp Arslan**, and it has been judged to be successful, in scope and in quality, at the defense exam and accepted by our jury as a MASTER'S THESIS.

**APPROVED BY:**

**Advisor:** **Assoc. Prof. Dr. Yalçın İşler**
İzmir Kâtip Çelebi University

**Co-advisor:** **Asst. Prof. Dr. Ebru Sayılgan**
İzmir Economy University

**Committee Members:**

**Asst. Prof. Dr. İbrahim Kaya**
İzmir Kâtip Çelebi University

**Asst. Prof. Dr. Özlem Karabiber Cura**
İzmir Kâtip Çelebi University

**Asst. Prof. Dr. Yılmaz Kemal Yüce**
Alanya Alaaddin Keykubat University

**Date of Defense: December 05, 2023**

# Declaration of Authorship

I, **Onuralp Arslan**, declare that this thesis titled **Development of Body Position and Muscle State Analyzing Personal Trainer Device with Mobile App Support** and the work presented in it are my own. I confirm that:

- This work was done wholly or mainly while in candidature for the Master's / Doctoral degree at this university.
- Where any part of this thesis has previously been submitted for a degree or any other qualification at this university or any other institution, this has been clearly stated.
- Where I have consulted the published work of others, this is always clearly attributed.
- Where I have quoted from the work of others, the source is always given. This thesis is entirely my own work, with the exception of such quotations.
- I have acknowledged all major sources of assistance.
- Where the thesis is based on work done by myself jointly with others, I have made clear exactly what was done by others and what I have contributed myself.

Date: 05.12.2023

Development of Body Position and Muscle State Analyzing Personal Trainer Device with Mobile App Support

# Abstract

The aim of this thesis was to develop a wearable personal trainer device supported with an application that works on mobile devices to analyze arm position and muscle state during a weight exercise. The wide popularity of an active lifestyle combined with people's demands for well-informed workouts, a need for personalized training devices is detected. Main objective was to design a wearable tracking system that could detect and track arm position and collect real time data from desired muscles (biceps brachii, brachialis, coracobrachialis, and triceps brachii) to track exercise effectiveness and reduce the risk of injuries.

The development processes can be divided into three main stages listed as: development of a mechanical framework, electronics development including sensors and software development. Using a single sensor on the elbow joint is shown to be an efficient method to detect movement during isolated weight exercises that aim upper arm muscles. Using an electromyography (EMG) sensor on targeted muscles allowed the system to track muscle contraction in real time.

Using an embedded processor and connection to mobile devices allowed suitable processing capacity to use captured data in real time and warn users if needed. Mobile apps also create a platform to keep track of data and present an easy to use user interface for system control.

In this thesis the development process of an arm position and muscle motor unit firing rate analyzing personal trainer devices with an application interface is presented. The device is capable of real-time data collection/processing, editable training programs, and exercise efficiency tracking to empower people to optimize workout sessions while reducing their risk of suffering from injuries. Future work involves further refinement of the device and app, as well as exploring opportunities for commercialization and integration with existing fitness platforms.

**Keywords:** Wearable technology, exercise training, biomechanics, rehabilitation

# Vücut Pozisyonu ve Kas Durumu Analiz Eden Mobil Uygulama Destekli Kişisel Antrenör Cihazı Geliştirilmesi

## Öz

Bu tezin amacı, bir ağırlık egzersizi sırasında kol pozisyonunu ve kas durumunu analiz etmek için mobil cihazlarda çalışan bir uygulama ile desteklenen giyilebilir bir kişisel antrenör cihazı geliştirmektir. Aktif yaşam tarzının geniş popülaritesi, insanların bilinçli egzersiz yapma isteği ile birleştiğinde, kişiselleştirilmiş antrenor cihazlarına ihtiyaç olduğu tespit edildi. Ana hedef, egzersiz aktivitesini takip etmek ve kas zedelenmesi riskini azaltmak için kol pozisyonunu algılayıp takip edebilen ve istenen kaslardan (biceps brachii, brachialis, coracobrachialis ve triceps brachii) gerçek zamanlı veri toplayabilen giyilebilir bir izleme sistemi tasarlamaktır.

Geliştirme süreçleri şu şekilde sıralanan üç ana aşamaya ayrılabilir: mekanik bir iskeletin geliştirilmesi, sensörler dahil elektronik donanım geliştirme ve yazılım geliştirme. Dirsek ekleminde tek bir sensör kullanılmasının, üst kol kaslarını hedef alan izole ağırlık egzersizleri sırasında hareketi algılamada etkili bir yöntem olduğu gösterilmiştir. Hedeflenen kaslarda bir elektromiyografi (EMG) sensörü kullanmak, sistemin kas kasılmasını gerçek zamanlı olarak izlemesini sağladı.

Gömülü bir işlemci ve mobil cihaz ile bağlantı kullanmak, yakalanan verileri gerçek zamanlı olarak kullanmak ve gerekirse kullanıcıları uyarmak için uygun işleme kapasitesine izin verdi. Mobil uygulamalar ayrıca verileri takip etmek için bir platform oluşturdu ve sistem kontrolü için kullanımı kolay bir kullanıcı arayüzü sundu.

Bu tezde, bir uygulama arayüzü ile kişisel antrenör cihazının kol pozisyonu ve kas motor ünitesi ateşleme hızını analiz eden geliştirme süreci sunulmaktadır. Cihaz, gerçek zamanlı veri toplama/işleme, düzenlenebilir egzersiz programları ve insanların egzersiz seanslarını optimize ederken yaralanma risklerini azaltmalarını sağlamak için egzersiz verimliliği izleme yeteneğine sahiptir. Gelecekteki çalışmalar, cihazın ve uygulamanın daha da iyileştirilmesinin yanı sıra ticarileştirme ve mevcut fitness platformları ile entegrasyon fırsatlarını keşfetmeyi içeriyor.

**Anahtar Kelimeler:** Giyilebilir teknoloji, egzersiz takibi, biyomekanik, rehabilitasyon

*This thesis work is dedicated to my family who encouraged me to work on my master's degree.*

# Acknowledgment

I thank Yalçın İşler for guiding me through this thesis and Arda Sarpay for helping with electronics.

# Table of Contents

Declaration of Authorship ..... **ii**

Abstract ..... **iii**

Öz ..... **v**

Acknowledgment ..... **viii**

List of Figures ..... **xii**

List of Tables ..... **xiv**

List of Abbreviations ..... **xv**

List of Symbols ..... **xvi**

**1 Introduction ..... 1**

1.1 Exercise Tracking and Personal Training ..... 2

1.2 Exercise Efficiency and Muscle Hypertrophy ..... 3

1.3 Exercise Technique and Injury Prevention ..... 5

1.4 Relations of Changes in Surface EMG and Muscle Changes ..... 7

1.5 Wearable Exercise Tracking Devices ..... 8

1.6 Popular Wearable Exercise Tracking Devices ..... 10

1.6.1 Garmin Watches ..... 10

1.6.2 Fitbit Watches ..... 10

1.6.3 Apple Watch ..... 10

**2 Methodology ..... 12**

2.1 Device Design and Planning ..... 12

2.2 Mechanical Design and Parts ..... 15

2.2.1 ROM Orthosis ..... 15

2.2.2 Motor Housing ..... 16

2.2.3 Moving Arm ..... 17

2.2.4 Moving End of Rotary Encoder Holder ..... 18

2.2.5 Moving End of Rotary Encoder Holder ..... 19

2.2.6 Cable Connector End Piece ..... 20

2.3 Electronics, Sensors, and Embedded System ..... 21

2.3.1 ESP32 ..... 21

2.3.2 EMG Sensor ..... 22

2.3.3 Rotary Encoder ..... 22

2.4 Software Development ..... 22

2.4.1 Dart Language ..... 22

2.4.2 Flutter Framework ..... 22

2.4.3 Mobile Application ..... 23

**3 Design Verification ..... 24**

3.1 Biomechanics of Dumbbell Curl ..... 24

3.2 Force of Motor and Moving Arm ..... 26

3.3 Static Analysis of Parts ..... 32

3.3.1 Analysis of Moving Arm ..... 32

3.3.2 Analysis of Cable Connector End Piece ..... 33

3.3.3 Analysis of Motor Housing ..... 34

**4 Results & Discussion ..... 36**

**5 Conclusion & Future Work ..... 39**

**References ..... 42**

**Appendices ..... 49**

Appendix A Technical Drawings of Parts ..... 50

Appendix B Curve Fitting ..... 53

Appendix C Publications from the Thesis ..... 55

**Curriculum Vitae ..... 56**

# List of Figures

Figure 2.1: Picture of the device during the development stage ..... 15

Figure 2.2 : Picture of the motor housing. (a)Top View (b) Isometric View ..... 16

Figure 2.3: Picture of the early design of the arm (brown) placed over the motor .... 17

Figure 2.4: Updated design of the arm ..... 18

Figure 2.5: Moving rotary encoder holder. (a) Side view, (b) Back view ..... 19

Figure 2.6: Rotary encoder body holder ..... 20

Figure 2.7: End piece ..... 20

Figure 2.8: Schematics of electronics ..... 21

Figure 2.9: Mobile App Screens, (a) Login, (b) Menu, (c) Free Control..... 23

Figure 3.1: Simplified representation of a biceps curl ..... 25

Figure 3.2: Side view of moving arm..... 26

Figure 3.3: Simplified representation of moving arm ..... 27

Figure 3.4: Representation of device on use ..... 27

Figure 3.5: Geometric model of device..... 28

Figure 3.6: Graph of elbow and arm-cable angle relation ..... 30

Figure 3.7: Forces on Connector piece applied by cable ..... 31

Figure 3.8: Results of static analysis..... 33

Figure 3.9: End Piece analysis, (a) side view, (b) front view, (c) focused on stress.. 34

Figure 3.10: Motor Housing Stress Analysis ..... 35

Figure 4.1: Reading from EMG with serial connection to microcontroller..... 36

# List of Tables

Table 3.1: Data Points ..... 29

# List of Abbreviations

| | |
|---|---|
| ABS | Acrylonitrile butadiene styrene |
| BMI | Body mass index |
| EMG | Electromyography |
| IGF-1 | Insulin-like growth factor 1 |
| MPa | Megapascal |
| OTA | Over-The-Air |
| ROM | Range of Motion |

# List of Symbols

| | |
|---|---|
| F | Force [N] |
| m | Mass [kg] |
| M | Moment [Nm] |
| d | Distance [meter] |
| T | Torque |
| r | Diameter |

# Chapter 1

# Introduction

An active lifestyle combined with well performed physical exercise plays a vital role in maintaining a healthier life for individuals. In this scope during physical exercises there is a risk of injuries including but not limited to strains, sprains, muscle cramps, muscle Spasms and muscle tendonitis. Such injuries can either prevent people from exercising for limited time or can cause permanent damage that both prevent them from further exercise and also cause problems in daily life. This result contradicts the initial aim of a healthier lifestyle. Thus, performing physical exercise with correct form and method is an elementary part of being healthier during a physical exercise.

With increased interest in an active lifestyle and as an after effect of the coronavirus pandemic of 2020, people get accustomed to performing isolated exercises or looking for personal trainers. Developing a device that helps personal trainers to reach clients far away and track their posture with high precision or a device that is capable of performing the role of personal trainer to an extent can become a viable answer to this demand. A device that can reduce risk of physical injury caused by exercise while increasing the workout process by tracking details can make better workouts accessible to a wider range of people.

Developed prototype of personal trainer device for arms discovers this area to how modern sensor technologies can improve the well-established methods of physical exercise sessions.

## 1.1 Exercise Tracking and Personal Training

Different methods of tracking efficacy of exercise methods have been developed, each aiming to better understand how individuals react to certain exercises in order to optimize their workouts to yield as much result as possible.

One method developed includes tracking biological markers such as nutrition and metabolic status, hydration levels, muscle condition, performance of endurance, injuries, and inflammations. Although relying on a single biomarker is not suitable for determining data about health and exercise efficacy of individual combinations of them showed meaningful correlation with persons state. With these methods important detections like detection of over training can be performed by single or few biomarkers yet to accurately and precisely detecting performance of a training session and assessing health of an individual needs a comprehensive analysis of biomarkers with dynamic approaches (Lee et al., 2017).

Reporting personal experience is known as “self-reporting” and it is commonly used for tracking exercise. With usage of diaries, self-kept logs or questionnaires individuals record their exercise and / or physical activity easily. Although this method is commonly executed it relies heavily on subjective bias of individuals. Thus this method is prone to biases such as social desirability and recall (Telama, 2009).

To create easy to access and objective methods using calibrated tools or sensors for measurements such as pedometers and accelerometers are preferred. These methods can reliably measure distance traveled by a runner or the average speed. They can also be found in wearable forms like Garmin watches or in the form of small chips that can be placed on shoes like Nike+ sensor kit. Those methods provide objective methods of measurement, but they can be expensive and could require calibrations (Telama, 2009).

Using applications that can be installed on mobile devices is becoming a popular method of exercise tracking. Due to ease of access and requirement of relatively lower recourse mobile apps are seen as a reliable solution since they both offer a log feature that acts as a personal tracking journal, and they benefit from sensors and technologies that are already in mobile devices. With integration of social interaction those apps

also increase physical activity levels either from friends added over applications or virtual exercise challenges. With gamification of exercise mobile apps also motivate users. For exercise like running that also benefits from socialization and mobile device technologies like GPS (Global Positioning System), mobile applications are a suitable solution (Room et al., 2017). Those advantages do not reveal themselves in exercise like weightlifting.

Personal trainers are professionals that provide services for individual guidance and personalized introductions to people. Their services include custom designed exercise programs that take into account goals, needs and physical abilities of their client. To prepare, track and adjust the program of individual personal trainers use information about fitness level, diet, and medical history of targeted individuals. This approach aims to maximize the efficacy of exercise (Motl & Sandroff, 2015).

Personal trainers can benefit from accessing their clients' exercise trackers. Ability to examine their performance values can help trainers to assess the level of physical activity that suits the client. In this regard personal trainers can take advantage of better tracking systems to create or design customized programs to efficiently target desired muscles and optimize exercise results. Addition to objective data, personal trainers can use tracking to motivate and hold accountable the trainee thus increasing their possibility to be loyal to their program (Sullivan & Lachman, 2017).

Exercise tracking systems in the form of wearable devices or mobile applications can give wider information than simple exercise tracking such as exercise intensity by measuring a runner's pace, heart rate, duration of exercise and amount of steps taken. This data can be visualized by applications and can be beneficial to easily track overall change in physical activity habits (Phan et al., 2018).

## 1.2 Exercise Efficiency and Muscle Hypertrophy

Mode of training is known to affect muscle hypertrophy besides the factors like muscle groups involved in exercise and initial training status of the person. A method of high intensity resistance training known as YoYo technology consists of isoinertial contractions against a rotating flywheel shown to be successful at early gains both in muscle strength and mass. Applying a high amount of torque to manipulate rotation of

circular mass results as a high intensity training that efficiently causes hypertrophy (Seynnes et al., 2007).

Different methods of exercise that target the same muscle can vary in results. Eccentric training that is also known as negative training where the load on muscle is released in controlled manner and coupled concentric-eccentric where muscles loaded and released with controlled manner is shown to be more effective than focusing on concentric training alone where muscle goes under load slowly. eccentric muscle activation shown to be necessary stimuli for hypertrophy of targeted muscle (Higbie et al., 1996).

When effects of eccentric and concentric training are compared in exercise sets with different velocities on hypertrophy of targeted muscle groups, eccentric training is shown to yield more successful results compared to concentric training where the criteria of efficiency are determined by muscle hypertrophy (Farthing & Chilibeck, 2003).

For an exercise that aims the eccentric overload of a muscle group using different exercise equipment can also alter the results. Comparing training with flywheel device where resistance generated by spinning mass and weight machine where resistance generated by usage of gravity and weight blocks, flywheel device yields greater hypertrophy. This result is attributed to flywheel machines' capability of providing eccentric overload besides variable resistance (Norrbrand et al., 2007).

Besides high intensity training, slow moving low intensity resistance training is also explored as a method to induce muscle hypertrophy. Low intensity training with slower movements can improve hypoxic environments in the intramuscular region thus resulting in muscular hypertrophy (Tanimoto & Ishii, 2006).

Resistance exercise is shown to be the most successful form of training for mammalians. Initiation of muscle hypertrophy and stimuli is closely related. Mechanical stimuli and metabolic stress are known hypertrophy stimuli besides the mechanism of micro damage associated triggers (Wackerhage et al., 2019).

Loading a muscle to its maximum potential is shown to be successful for improving muscle mass. With exercises loads from 70% to 100% of one repetition maximum

weight of given exercise can recruit maximum number of motor units during exercise. While muscle fibers fatigue, different motor units will be recruited to continue to exercise allowing maximum muscle hypertrophy. This suggests that the success of resistance training might be allowing people to exercise for their maximum loads until failure which causes more motor units firing in muscles. Motor unit activation and muscular fatigue can be seen on surface electromyography. Detecting fatigue and exercising until contractile failure can maximize motor unit recruitment therefore resulting in efficient muscle hypertrophy (Morton et al., 2015).

Muscle hypertrophy relation with changes in body after exercise ends is also researched. Such changes in testosterone levels, Growth hormone, insulin-like growth factor 1, interleukin 6, skeletal muscle androgen receptor protein content, and p70S6K phosphorylation status are investigated and it shown to be those temporary level changes induced by exercise that are not related to hypertrophy happens after training. Although some correlation between interleukin 6 and hypertrophy is detected, the actual mechanism is not known (Mitchell et al., 2013).

The insulin-like growth factor 1 (IGF-1) pathway is known to be an important pathway to muscle hypertrophy. Synthesis of IGF-1, localized in muscle groups can cause hypertrophy and prevent atrophy that is caused by aging. Synthesis of IGF-1 causes a pathway resulting in activation of GATA-2 and NF-ATc1 which are transcription factors that promote muscle hypertrophy (Musarò et al., 1999).

## 1.3 Exercise Technique and Injury Prevention

Correct technique of exercise is an indispensable basic requirement for prevention of injuries caused by physical activities. Proper technique, while reducing injury risks, also helps to improve dynamic balance. An example study made among women's team handball players showed that focusing knee control and balance exercises reduces risk of injury at anterior cruciate ligament (ACL) during cutting movements (Olsen et al., 2005).

Studies performed on older adults, exercises that aim to improve strength and balance have proven to be an effective method on reducing falls and fall related injuries. While frequent weight bearing low-impact exercises supported with calcium supplement

taken for a 2-year period did not reduce falls, individually designed training that aims to improve balance and strength reduced both falls and fall related injuries. For people who kept exercising, benefits were evident through the 2-year period (O. S. P. O. F. Society et al., 2001).

Physical activity shown to positively impact injuries on overweight and obese adults whose BMI values range between 25 to 40. In a study where obese or overweight adults were prescribed with physical exercise in the form of walking in addition to their weight gain prevention or weight loss programs those who exercise did not report higher injuries than those who did not exercise. While only 7% of injuries reported being caused by exercise while 59% of reported injuries were not related to exercising. Study shows BMI is highly related to the number of injuries reported and physical activity is effective in lowering BMI value. Also, the relationship of dose-response between BMI and injuries can be lowered with exercise (Janney & Jakicic, 2010).

Addition to injury reducing benefits of physical exercise, correct form and different methods of performing such exercise can reduce risk of injury during the physical activity. Adjusting the parameters of exercise such as intensity, frequency and duration risks can be lowered. The risk of injury reduces as the fitness of trainees increases. Individually tailoring those parameters by assessing fitness level of a person is shown to be reducing the injuries (Sawyer et al., 2021).

Teaching safe training techniques and guidance on proper form can play a significant role in reducing injuries related to exercise. Using methods to promote correct form and educating about methods shown to be effective. One method that can be promoted is to rehabilitation measures like stability and flexibility training. After 6 weeks of flexibility training surface EMG signals on target muscle groups are improved during arm lifting. This improvement is a marker of improved flexibility on joints and lower injury risk during the exercise (Liu & Ma, 2023).

## 1.4 Relations of Changes in Surface EMG and Muscle Changes

Surface electromyography (EMG) is a method of measuring muscle function while muscle performs various activities with a non-invasive approach. Electric signals from muscle are collected via electrodes that are placed onto the skin surface and can be processed to assess information. With this method information about muscle activation, muscle fatigue and motor unit recruitment of muscle can be detected (Malek et al., 2009).

There are indicators of surface EMG signals related to muscle hypertrophy. When early stages of hypertrophy and form changes are examined on skeletal muscle groups for high-intensity resistance training, an increase in surface EMG signals are observed starting from initial weeks of training. Trials performed on different muscle groups and exercise programs showed that as muscle mass and strengths gained EMG activity in muscle increases (Seynnes et al., 2007).

Although no clear-cut definitions for muscle fatigue can be done due to different mechanisms of fatigue often overlap, it can be defined as the decline of force output of a muscle during extended physical activity. Neuromuscular mechanisms could also affect fatigue where nerve systems fatigue, but it can be distinguished from muscle fatigue due to changes in motor unit firing. When muscle fatigues, increase in recruitments of motor unit action potential is observed which is a change that can be measured by change on surface EMG signals. As muscle fatigues, amplitude and frequency change on surface EMG signals are observed. It should be noted that those parameters can also be affected by electrode placement, thus keeping electrodes in the same position is crucial for observing changes reliably (Al-Mulla et al., 2011).

In a study by Halim et al., effects of prolonged standing effects on workers are investigated. For the methodology to assess fatigue two methods used questionnaire surveys and surface EMG readings. When results were compared, surface EMG signals amplitudes were observed to be increased as the frequency of the power spectrum shifted to the lower end as workers self-reported higher levels of fatigue.

These findings propose a relation between fatigue of a muscle and EMG signal readings (Halim et al., 2012).

## 1.5 Wearable Exercise Tracking Devices

Studies made on people who use it are about %30 of adults in the US shown to be using wearable healthcare devices. Those devices include smartwatches that mainly focus on different features but also offer health care services and fitness trackers like FitBit. Among them, the majority of 82.38% of users expressed their willingness to share their data to health care professionals. The ones who prefer such devices are weighted in younger and more educated individuals with higher household income. Users of such devices self-reported “feeling healthier” (Chandrasekaran et al., 2020).

Older adults evaluate such tracker devices as motivators for more exercise by either keeping them responsible for their decision to exercise (or not) and also creating a social connection with other people performing exercise (Kononova et al., 2019; Sullivan & Lachman, 2017). On the other hand, young adults' attitude toward such devices is affected by the “cool” factor of such devices, in addition to perceived health benefits (Chandrasekaran et al., 2020). When use of medical health tracking wearables for emergency medical residents, tracking devices are not observed to induce an increase in reported physical activity (Schrager et al., 2017). Systematic review on consumer targeted wearable activity trackers proposes that such devices can increase users' tendency to perform physical activities. Study found that getting real time feedback on metrics like sleep time, daily step count, calorie intake and burned calories can promote users to be careful on making healthier decisions and increase on physical activities (Brickwood et al., 2019). It should be noted that some of the users who purchase such devices are already motivated to make healthier devices and/ or increase their physical activity. Therefore, it can be concluded that changes in users' physical activity habits reacting to use such healthcare or exercise tracking devices can vary according to outside factors like user’s background, education level, current health stats, age group and income level.

To assess and detect the positive impact of wearable physical activity tracker devices among adults who are older than fifty years old and have chronic illnesses, a study by

Mercer et al. has been conducted in 2016. Study focused on different aspects of user experience on adapting on relatively new tracker devices in categories listed as adaptation with comfort, self-awareness on reaching and setting goals, the purpose of using such devices and the future viability of using activity trackers. After the study, while most of participants reported on not planning to purchase a pedometer due to poor accuracy, 73% of participants stated they planned to purchase a wearable physical activity tracker. 50% of them stated FitBit as a possible purchase and 42% of participants expressed, they would prefer Misfit, Jawbone, or Withings. Although some required support on setting up devices, observed results showed that a reliable and accurate tracker is both preferred by users and promotes increase in physical activity (Mercer et al., 2016). Wearable activity trackers among adolescents are observed to induce increased physical activity compared to control groups. As the use time gets longer greater success on positive impacts is observed. Self established goals and tracking them with devices have behavioral change effects on users. Physical activity trackers have shown to be feasible to improve physical activity levels amongst users (Ridgers et al., 2016).

Age is detected as an important factor in predicting sustainable use of wearable activity trackers, with higher age being shown to be related with longer use of such devices to track one's activity habits. Tracker device precise and perceived efficacy are also stated as important factors due to poor user experience being detected as highly repellent to users. Although sustained use on physical activity trackers are not easy to predict, rather than rapid decline users tend to abandon use at a slow but exponential pace. For FitBit use, 50% of users shown to be using their devices for nearly 6 months. Highest reasons to abandon the use of trackers were technological problems or technological shortcomings of used devices (Hermsen et al., 2017). Preferences on features of devices also seem to be different when short time user groups compared with long time user groups (Kononova et al., 2019).

Studies made to assess user adoption, acceptance and retention for wearable activity trackers extends to many different focus groups. Device structure, branding and aesthetics have a differing effect on user groups depending on user age groups. Popular products like Apple Watch are preferred by younger age groups (Chandrasekaran et al., 2020).

While in older age groups the Mi band showed higher acceptance compared to Microsoft Band. In this decision form factor, comfort and price for technology are stated as important criteria (Puri et al., 2017).

## 1.6 Popular Wearable Exercise Tracking Devices

### 1.6.1 Garmin Watches

Garmin watches are wrist worn exercise tracking devices in the form of wristwatches and equipped with different sensors to collect information about users status. Accurate heart rate measurements provided method photoplethysmography performed by green light-emitting diode optical sensors (Stove et al., 2019). Tests performed to compare Garmin watches accuracy with chest strap monitors accuracy during rest, cycling, treadmill running, and rapid arm movement proved that methods of Garmin watches provide more accurate measurements (Sirisunhirun et al., 2022).

### 1.6.2 Fitbit Watches

In performance on monitoring heart rate and energy expenditure of users during various physical activities, Fitbit showed close to accurate results. During high intensity activities or with activities that lack repetitive wrist motion, the Fitbit devices performed with negative bias and showed high error rates. Contrary to their diminishing accuracy while performing high intensity exercises, these devices are still useful to psychological stress measurement (Gagnon et al., 2022).

### 1.6.3 Apple Watch

Although the primary goal of this device is not being a fitness tracker, with its sensors built-in Apple Watch is a formidable tool to track one’s physical activities. Usage of photoplethysmographic methods to assess heart rate, skin color's effect on measurement result is a commonly raised question due to methods dependency on light transmittance on skin tissue. When compared with chest strap heart rate monitors, measurements made with Apple Watch on a test group that consist of people with different skin types and melatonin levels are observed to be accurate and similar to

chest strap method. Although skin types created some difference in result, those differences were consistent in skin types and were not significant (Sañudo et al., 2019).

# Chapter 2

# Methodology

## 2.1 Device Design and Planning

Device that is planned to be developed can be basically considered as a wearable health and activity monitor device. In the scope of wearable fitness monitoring devices that were examined in preparation for the development, it is observed that most devices on the civilian market are aimed at determining speed or position of the user relative to earth. Unlike running where observing variables such as speed and location relative to earth can yield useful information, using this method on weightlifting can not always result in useful information. For example, in an exercise called “dumbbell curl” where a person uses weight that can be holded in a single hand and lifts upwards targeting muscle on the arm called biceps brachii, while position of weight relative to earth is expected to be an arch due to flexion movement of elbow joint. Yet this does not give us any information about movement on the ulna and radius compared to humerus. This information is valued because a person can “cheat on exercise” by moving their upper arm to aid the lift. This aid can reduce the stress on muscle causing reduction in muscle mass gain.

Detecting movement of ulna and radius relative to humerus allows devices to detect incorrect forms known as “cheating on exercise” and warn users. This is not just important to improve muscle mass gain but also important since incorrect form might cause injuries that include temporary or permanent damage to muscle tissue and/or joints.

For detecting movement on a joint at least two contact points on the body are required. In this development process since the device is aimed for tracking exercise that targets

the arm muscles biceps brachii and triceps brachii, a contact point on the upper and another contact point in the lower arm is selected. Since two given muscle groups are responsible for elbow movements flexion and extension respectively, observing the change in angle of the elbow joint can yield required data to analyze exercise that aims those muscles.

Creating a design that can follow the natural movement without slipping during heavy physical activity is the first design challenge of the process. With different arm length and volumes for different users, instead of focusing on the movement, focusing on firmly gripping the arm is decided. A device called ROM orthosis is used to firmly grip the arm. ROM stands for “range of motion”, which means extent of movement that can be achieved by completely flexing or extending muscles that control the joint. Orthosis is a medical device that supports the limbs. With selected ROM orthosis it is possible to select a range of motion with the lock mechanism over the elbow joint.

Using a rotary encoder or a potentiometer over elbow joint yields the information of position moving parts relative to each. To achieve that two holder parts are needed to hold the body and end of a rotary encoder. Those parts should also securely connect to the ROM orthosis.

Another design challenge emerged on placement of EMG electrodes. During the literature review, it is observed that tracking made with EMG electrodes are prone to measurement errors since change of locations of EMG electrodes can significantly alter the observed EMG signal. Due to movement during heavy physical activity and increased moisture on the surface due to perspiration EMG electrodes had trouble with staying on the body. Which can be solved by supporting electrodes physically. This is also achieved with the use of ROM orthosis.

To add more features on devices a motor is decided to be added on. It is expected to help users during an exercise known as “train to failure” where muscles are fatigued to the extent where another repetition of exercise movement can not be done. When detecting failure, the motor can help with low force to create the effect of “lightening” the load so more repetitions of movement can be done. Although there is no device that can act as such, getting help from people at last repetitions is a wide technique used in many lifting gyms. Developed devices can both help and observe the results

creating reliable data to how it affects muscle gain since it can observe the applied helping force and the EMG signal at the same time.

For a motor to not be a burden to use it should be a small but powerful one enough to help during lifting. To get more mechanical advantage and the placement of the motor introduced new design challenges. Using an asymmetric arm powered by the motor and placing the motor to shoulder level increased the force applied by motor. The asymmetric arm is connected to the lower end of the Rom orthosis by a cable and the rotational movement of the arm supplied by motor wraps the cable around the arm to create a pull that mimics flexion movement of the elbow joint.

For the motor to function as intended, three different parts are designed, one motor housing, one arm and the connection part for cable. Parts are designed with open-source 3D modeling programs and produced with FDM 3D printing devices.

To control motors, process EMG data and communicate with mobile devices, a controlling unit on device is needed. Requirements for this device is simply to allow wireless connection over Bluetooth, have enough processing for real time applications and low power consumption. With those criteria included ESP32 development board became a viable option due to its dual core processing and enough memory suitable for application on this device. Abilities such as supporting OTA (Over-The-Air) updates were not initially planned but they also became one of the reasons to use ESP32.

For mobile application development Kotlin for Android and Swift for IOS were first candidates for language, to keep mobile development simple instead of developing two different applications on two different programming languages, a cross-platform development method is preferred. For this reason, Flutter framework with Dart is selected as the mobile application development. Although Dart is not a commonly used language, since its syntax is similar to JavaScript it was easier to adopt during the development process. With flutter frameworks, nested development logic's similarity to html is also another advantage to adopt the framework for developing this device.

## 2.2 Mechanical Design and Parts

To create a supporting platform for electronics and sensors that will be placed on the body to track exercise. a wearable platform is developed as can be seen in Figure 2.1. This platform includes six parts. An orthosis as the skeleton of the device, motor housing to connect supporting motor to the device, a mechanical arm to transfer motor movement to a cable, two parts for rotary encoder to track movement and connector for the cable connect to orthosis.

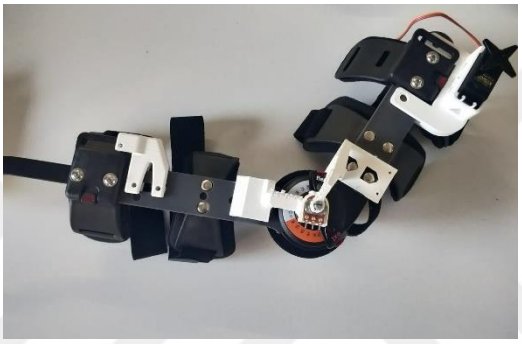

Figure 2.1: Picture of the device during the development stage

In this chapter, only the reason for parts will be discussed. Detailed technical drawings regarding parts are given in appendices as appendix A. Finite element stress analysis and load calculations will be given in the following chapter.

### 2.2.1 ROM Orthosis

A device known as an orthosis or orthotic device is a device designed to support body parts. Orthoses are medical devices that are generally used in the area of orthopedics, for injuries or conditions that affect musculoskeletal health. Orthosis devices can improve the life quality of users by reducing pain and also preventing development of further damage or injuries in tissues. These advantages are both observed in humans and a variety of animals including canines (Lee et al., 2021). Information about orthosis in canines is a supportive point for the design decision of using an orthosis

since even for a user that is not as cautious as a human, orthosis devices still performed positively.

With the orthosis advantage of providing mechanical support to joints and increasing stability during the movement, using an orthosis in the developed device can also prevent or reduce injuries that might happen during high intensity exercises. To fully take advantage of an orthotic device it is suggested to use the orthosis device with expert supervision. The tracking ability of the developed device aims to provide needed supervision for users (Lana et al., 2020).

### 2.2.2 Motor Housing

A motor placed on the shoulder level of the device to assist the movement if needed. Important criteria for the motor selection were the weight and the torque. For this reason, TowerPro MG995 Servo is selected. With weight of 55 grams and ability to provide stall torque of 11 kg/cm when supplied with 6 volts and 1200 milliamps MG995 motor was the suitable selection for this device (Servo Datasheet. TowerPro). Servo motor's ability to control position, torque and speed gives ability to control movement and apply only the needed force during exercise.

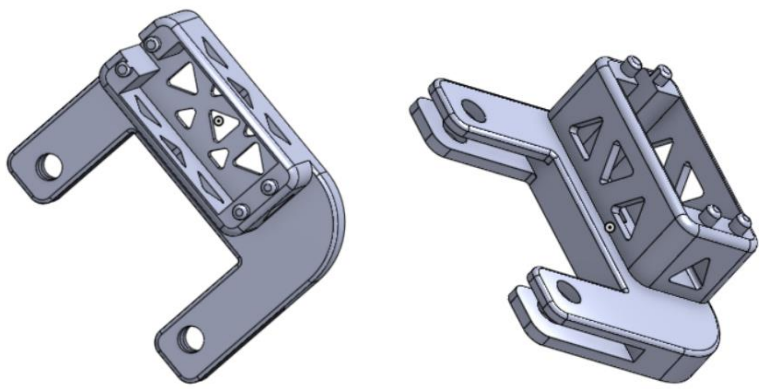

(a) (b)

Figure 2.2 : Picture of the motor housing. (a)Top View (b) Isometric View

To place the motor on the device a housing part is designed (see Figure 2.2). Parts have two arms that wrap around the upper part of the orthosis and can be tightened with bolts through the holes at the end.

Motor housing is made with holes in the body to prevent overheating that can happen on the motor. With the housings elongated bottom legs designed for firmly grasping orthosis devices so force applied by the motor doesn't change the motor's position relative to the upper arm of the orthosis. Shape also allows placing motors moving end to behind of the user's shoulder and further from the body. This allows the arm designed for the device to move without colliding with the user.

### 2.2.3 Moving Arm

An arm piece which is given in Figure 2.3, designed to be attached to the end of the motor. This arm piece can wrap a cable around itself with rotational movement supplied with the motor.

Figure 2.3: Picture of the early design of the arm (brown) placed over the motor

Instead of a single long arm, an asymmetric design with a curve can warp cable around itself so it can create a similar pull with much shorter form factor. With placement of the motor behind the shoulder of the user, and the arm having the length of 7 cm, the pull force is generated, aligned on the shoulder of the user. During rotation of the arm, the contact point of the cable and the arm is always aligned on the same point and the

circular shape allows the torque generated by motor acts to lift the arm and not towards any mechanical part of the device so the efficiency of the motor is protected.

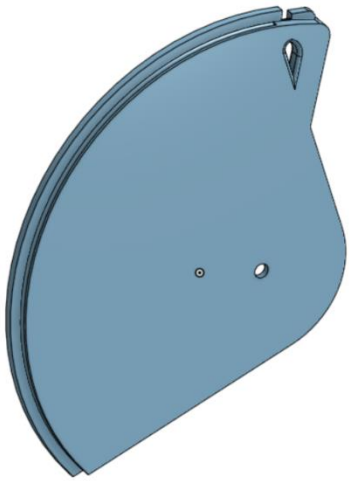

Figure 2.4: Updated design of the arm

To prevent cable slipping from the arm an asymmetric barrier added to the side (see Figure 2.4) closer to the body of the user and cable connection point lowered with a deeper groove causing cable firmly to press over the surface. After trials it is shown that using a full semi-circle is not needed so the arm piece is reduced to one third of the circle.

### 2.2.4 Moving End of Rotary Encoder Holder

To detect elbow joint movement a rotary encoder is used aligned to the elbow joint. This caused the need for two pieces holding the moving part of the rotary encoder and one holding the body of it (see Figure 2.5).

With a clamp-like end on the left-hand side, this piece can hold the rotary encoder and a bolt through holes in the end of the arm allows tightening the arm so the rotary encoder would not slip. Since current prototypes produced using PLA from a FDM 3D printer, the metal end of the rotary encoder bites into PLA material causing a better grip with pressure applied by the bolt at the end.

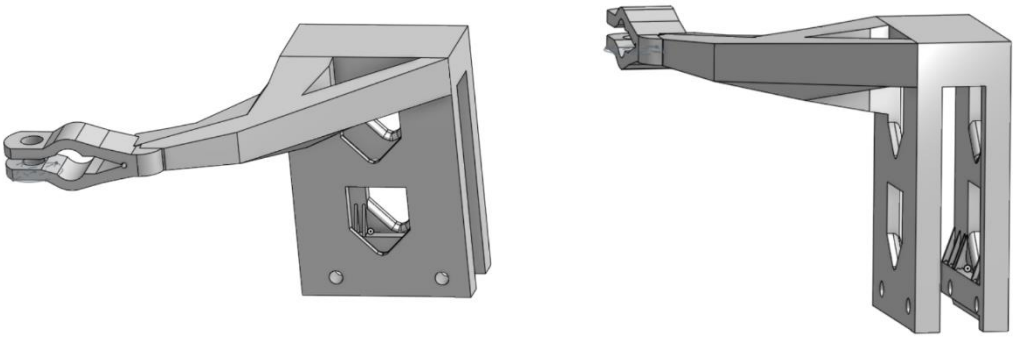

(a) (b)

Figure 2.5: Moving rotary encoder holder. (a) Side view, (b) Back view

With a clamp-like end on the left-hand side, this piece can hold the rotary encoder and a bolt through holes in the end of the arm allows tightening the arm so the rotary encoder would not slip. Since current prototypes produced using PLA from a FDM 3D printer, the metal end of the rotary encoder bites into PLA material causing a better grip with pressure applied by the bolt at the end.

Wide base of the holder ensures a firm grip on the orthosis arm. With two holes placed on the bottom part, bolts can be used to secure the holder to the body. Holes in the holder are designed to grapes round orthosis parts so a secure fitting is ensured.

### 2.2.5 Moving End of Rotary Encoder Holder

For the rotary encoder to work as intended another piece is needed. This piece is a holder piece to grasp the body of the encoder and links the movement of the lower arm to the body (see Figure 2.6).

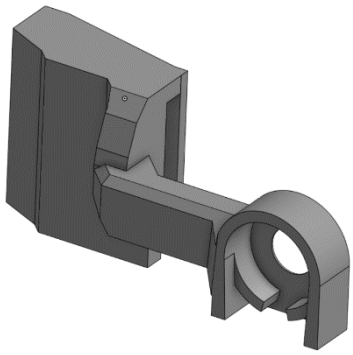

Figure 2.6: Rotary encoder body holder

This arm piece has a circular bed for the rotary encoder to fit in and straight walls to hold the encoder's part made for fixing it to the surface. The hole is designed to ensure the axis of the rotary encoder is aligned with the elbow joint of orthosis.

### 2.2.6 Cable Connector End Piece

This piece (see Figure 2.7) is required due to placement of the arm over the motor. Since it is parallel and further from the orthosis body connecting cable directly to orthosis causes resulting force to have a perpendicular component to the device which only increases the risk of cable slipping from the arm.

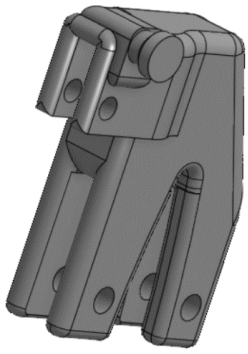

Figure 2.7: End piece

This piece ensures applied force is always parallel to the exercise and provides a secure connection point at the end of orthosis so cable can be connected. Three points of connection preferred for secure and stable connection for cable to hold on.

## 2.3 Electronics, Sensors, and Embedded System

For the device to perform as intended control units and sensors are needed. As control unit ESP32 (see Figure 2.8) is selected and for sensors a rotary encoder and EMG sensor is used. The controller system works in coordination with the mobile software developed to control devices better and present the results of the training.

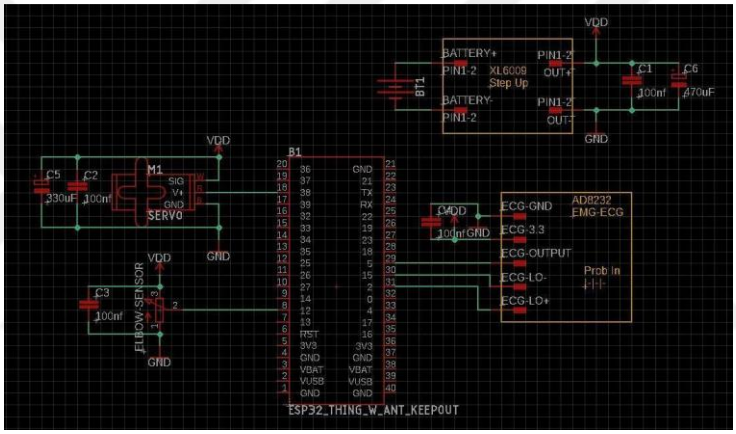


Figure 2.8: Schematics of electronics

### 2.3.1 ESP32

ESP32 is a single chip low-power 40nm microprocessor with 2.4Ghz Wi-Fi-and-Bluetooth combo. Ability to run up to 240MHz with its dual-core Xtensa processor that utilizes 32-bit architecture is powerful enough for devices that need to sensor data, apply simple mathematics and communicate with external devices simultaneously Built-in clock and analog signal reading capability makes ESP32 a viable selection for scope of applications for the developed device (Datasheet, Espressif Systems).

### 2.3.2 EMG Sensor

To achieve the graph of changes of biopotential on muscle that is targeted a biopotential sensor is needed. AD8232 is selected for its capability to work with ESP32 without problems. With the requirements of only 170 microamps and 2.0 volts, high-pass / low-pass filters and small size form factor makes this sensor a reasonable choice (AD8232 Heart Rate Monitor Front End Datasheet Analog Devices, 2021).

### 2.3.3 Rotary Encoder

This is a circuit element that can change potential by tuning a know on it. This part is used on the elbow joint and changes in potential are used to determine the position of the lower arm relative to the upper arm.

## 2.4 Software Development

For development of the mobile device application to track the data and control the device Flutter framework is preferred in Dart language. As an integrated development environment visual studio code is used.

### 2.4.1 Dart Language

Dart is a language defined as client optimized language for development for cross-platform applications. Modern features like type safety, native output to arm-64 architecture to minimize runtime, ability to perform hot reloads during development, incremental compilation, memory management by garbage collection and fast object allocation are reasons to select Dart language (Dart Overview).

### 2.4.2 Flutter Framework

Flutter is a cross-platform UI development framework with the slogan of “Build apps for any screen”. Developed by Google, it is an open-source framework to allow developers to build natively compiled applications for multiple platforms. In the development process of the device Flutter is used to develop a code base for an

application that can be compiled for both android and iOS devices. Flutter framework uses the Dart language (Flutter Dev).

### 2.4.3 Mobile Application

Mobile applications allow users to better interact with the device and easily visualize the data. It allows controlled exercise and free exercise mode to discover different exercises. It can be used to log data and better observe the muscle reaction to exercise or control the assist level of the device. Screen visuals from application can be seen in Figure 2.9.

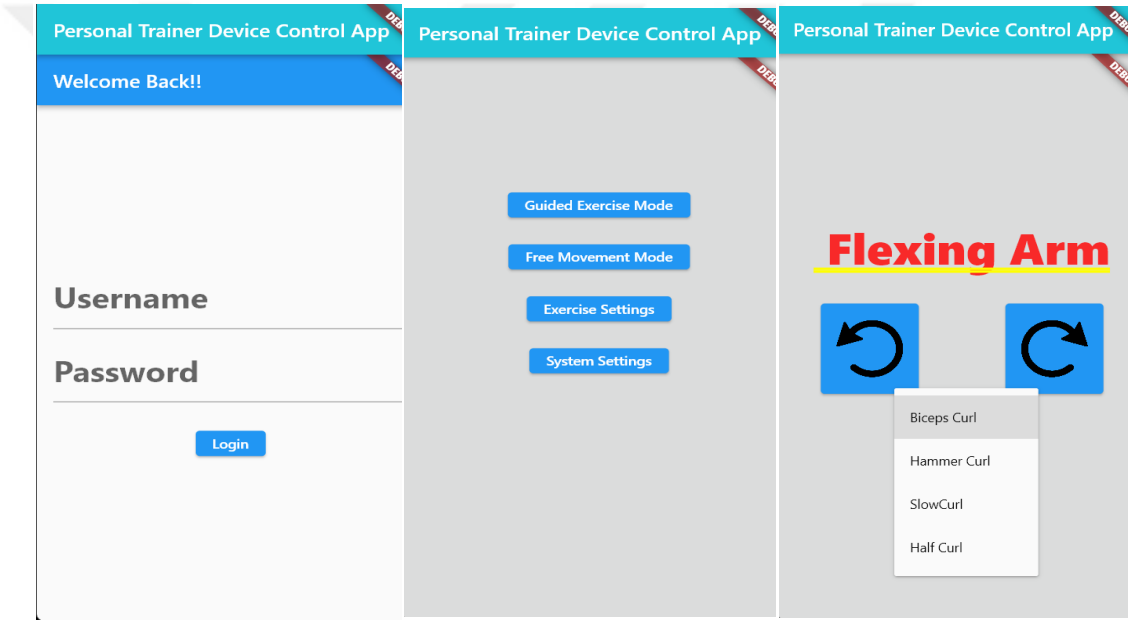


(a) (b) (c)

Figure 2.9: Mobile App Screens, (a) Login, (b) Menu, (c) Free Control

# Chapter 3

# Design Verification

To analyze required durability and force targeted exercise is examined mathematically. The developed devices will be used mainly for exercises that isolate biceps brachii such as ‘biceps curl’ where the arm starts parallel to the body grabbing a weight, resistance band or a cable and arm flexion is performed. By using biomechanics principles required force and the needed durability of the device is calculated.

## 3.1 Biomechanics of Dumbbell Curl

Muscles turn stimulus caused by electro activity into a mechanical output. When the threshold called the action potential of a muscle exceeded by incoming electrical stimuli muscle activates and contracts. During this contraction muscle shortens and releases heat that is called “shortening heat” besides the mechanical work performed by contraction. This heat is not related to work done. This behavior of muscles can be explained mathematically with the Hill model as given in Equation (3.1) (Hill, 1938).

$$(v + b)\,(F + a) = b(F0 + a) \tag{3.1}$$

Where

F is load in targeted muscle,

F0 is maximum load affecting the targeted muscle,

v is contraction velocity,

a is coefficient of shortening heat,

b is product of a and rate of maximum velocity at no load to maximum tension force on muscle.

Hill's model shows that the speed of the curl can be used to optimize the load on muscle. Another important parameter that can be used is the weight used during the exercise. Motor placed on the device can actively alter the weight of exercise by aiding the lift.

To calculate the moment of force on biceps brachii and the motor of the device we can use the physics formula given in Equation (3.2) (Asadi Dereshgi, 2023).

$$M = F * d \tag{3.2}$$

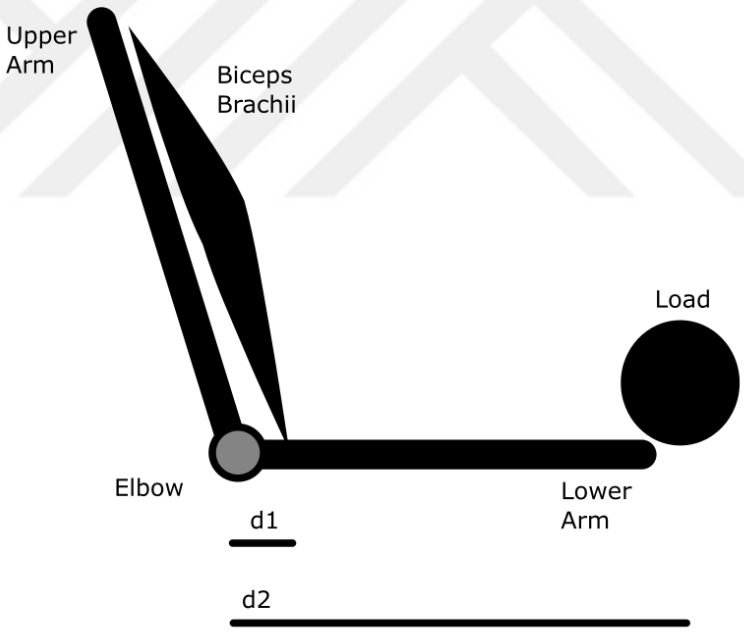


Figure 3.1: Simplified representation of a biceps curl

In the given Figure 3.1 d1 shows distance between biceps brachii connection to lower arm and elbow joint. Distance of d2 notates distance of load's center of mass to elbow joint. To perform the biceps curl exercise biceps brachii must exert a moment to elbow higher than the load's moment. By using M=F*d and plugging in distances for

equilibrium we can find the minimum value that the biceps should exert. After inserting values given in Figure 3.1, it yields Equation (3.3).

$$F_{BB}*d_1 = F_{Load}* d_2 \tag{3.3}$$

Where $F_{BB}$ is minimum force needs to be exerted by biceps brachii for equilibrium and $F_{Load}$ is the downward force caused by mass of the load. Since for a given person, distances of d1 and d2 will be constants, and it is not possible to alter those distances for an exercise, the only other parameter that can be changed to alter $F_{BB}$ is the $F_{Load}$. To alter this a motor placed on level with the shoulder will be used. This allows the user to push after failure due to fatigue or can be used to regulate motion velocity in order to manipulate force on targeted muscle as demonstrated in Hills model above.

## 3.2 Force of Motor and Moving Arm

An arm (see Figure 3.2) is used at the end of the motor to get mechanical advantage. The Servo motor that is used in the device has a limited rotation range. Therefore, to pull the end piece further, a mechanical arm is required that can result in more displacement for the same angular rotation. This displacement advantage reduces the amount of load reduction during exercise.

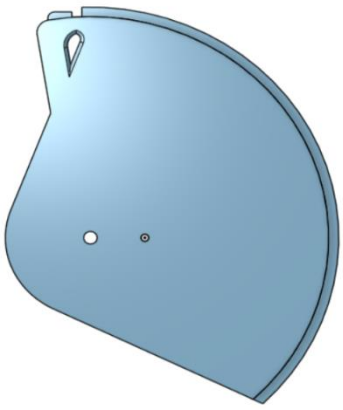

Figure 3.2: Side view of moving arm

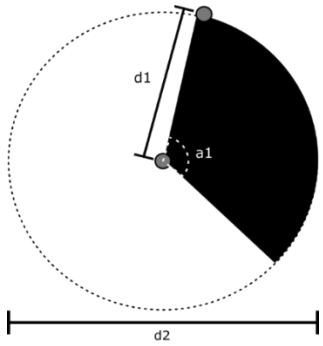


Figure 3.3: Simplified representation of moving arm

For ease of calculation this moving arm can be simplified as in Figure 3.3. With values of d1, the value from center to end of the arm is 70mm, d2 is 140mm and a1 is 95°. As can be seen in the drawing, the moving arm is 95° parts of a circular body. The circular shape creates a fixed distance between the torque arm and load.

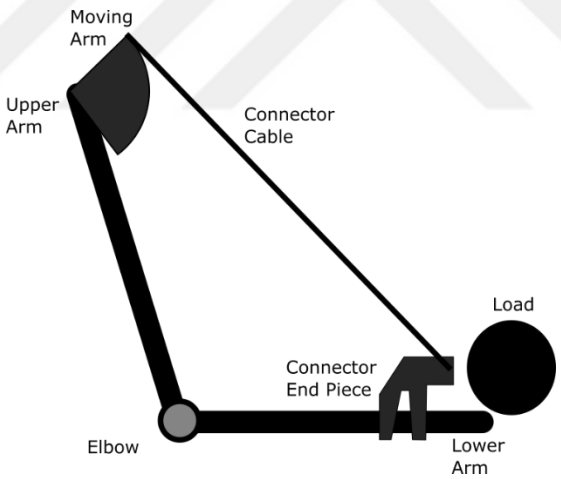


Figure 3.4: Representation of device on use

As given on Figure 3.4 the circular arm ensures that the connector cable stays at a fixed distance to the center of the motor resulting in fixed force applied during rotation of the motor. The MG995 Servo that is used is able to provide stall torque of 11 kg/cm (Servo Datasheet. TowerPro). Dividing this value to the length of the arm (70mm) yields the total force that can be applied to the cable and the maximum load that motor

housing, moving arm and connector end piece should be able to withstand. In Equation 3.4 is used to calculate how much force is generated by a given stall torque.

$$T / r = F * \sin\theta \tag{3.4}$$

Inserting values of motor torque and arm diameter to Equation 3.4 yields Equation (3.5). The circular shape of the moving arm ensures the perpendicular positioning between distance and the force on cable, resulting in the value of sinθ to be sin90 which is 1.

$$\frac{11kg/cm}{70mm} = 1.571\ kg \tag{3.5}$$

Motor and moving arm is capable of providing a support force up to 1.5 kg.

Due to changing angle of connector cable and lower arm these forces upwards component will change over the exercise. To find how the angle between connector cable and lower arm changes in relation to elbow angle a geometric model of device is used.

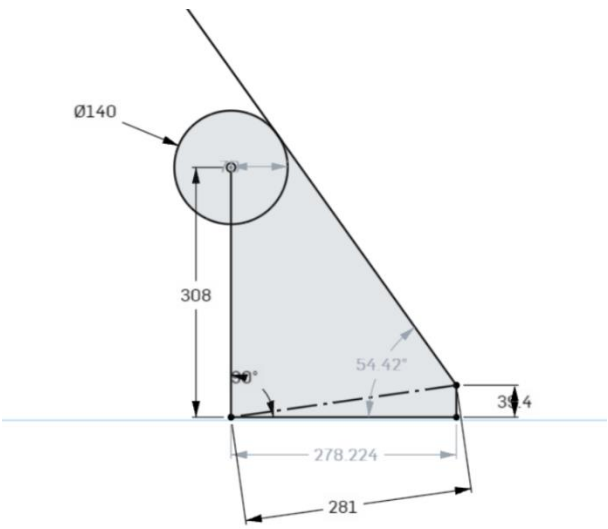


Figure 3.5: Geometric model of device

This given model (see Figure 3.5) has a fixed elbow and shoulder point since in the correct form of exercise those points should be fixed. Instead of moving the arm there is a circle with equal diameter and cable represented as a tangent to this circle at one end and connected to the arm at the other end. This model allows visualization of angles as elbow angle changes and also calculates angle between lower arm and connector cable. This angle is needed to be able to calculate the upward force component caused by load on cable.

Plunging in elbow angle data between 179 degrees to 40 degree allows us to simulate a wide range of motion for dumbbell curl exercise. Using angles with 10-degree intervals yields enough data points to use a curve fitting algorithm.

Table 3.1: Data Points

| Elbow Angle | Upper Arm - Connector Cable angle |
|---|---|
| 179 | 3.525 |
| 170 | 8.299 |
| 160 | 13.662 |
| 150 | 19.097 |
| 140 | 24.616 |
| 130 | 30.237 |
| 120 | 35.984 |
| 110 | 41.892 |
| 100 | 48.012 |
| 90 | 54.42 |
| 80 | 61.234 |
| 70 | 68.651 |
| 60 | 77.023 |
| 50 | 87.043 |
| 40 | 100.317 |

To get meaningful information from the given data set (see Table 3.1), a quadratic formula curve fitting (see Figure 3.6) is applied and generated a formula that yields cable-arm angle by plugging in elbow angle. Knowing this angle allows the device to calculate the upwards component of cable load at every elbow angle. This capability of the device creates a platform for precision control on how much weightlifting support will be supplied. At different elbow angles, different motor force is required to lift the same amount of weight.

To get curve fitting SciPy library of python is used, to visualize the data matplotlib library is used. The curve fitting algorithm is given as appendix b.

This code block returns both the formula to calculate angle between arm and cable and a visualization of change.

Fitted parameters are returned as a=0.0019293898048136082, b=-1.0808323447206893, c=136.85266818783936. This information can be plugged in as a quadratic formula after rounding numbers. Formula for curve is given in Equation (3.6).

$$y = 0.00193x^2 - 1.08083x + 136.85267 \tag{3.6}$$

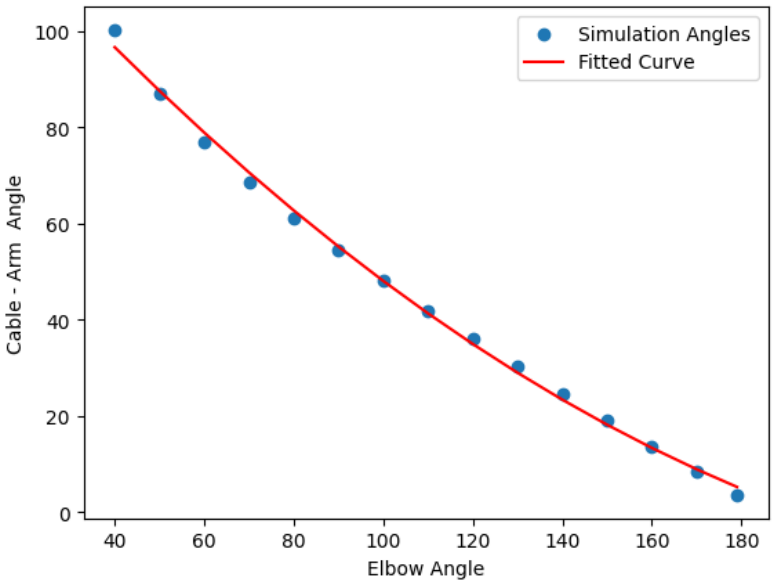


Figure 3.6: Graph of elbow and arm-cable angle relation

Dumbbell curl exercise is working against the vertical load component of the dumbbell caused by the gravitational force. To assist this exercise the vertical component of the force applied by cable is used. To easily calculate vertical component trigonometry can be used as in Equation (3.7).

$$Fy = F * \sin(a) \tag{3.7}$$

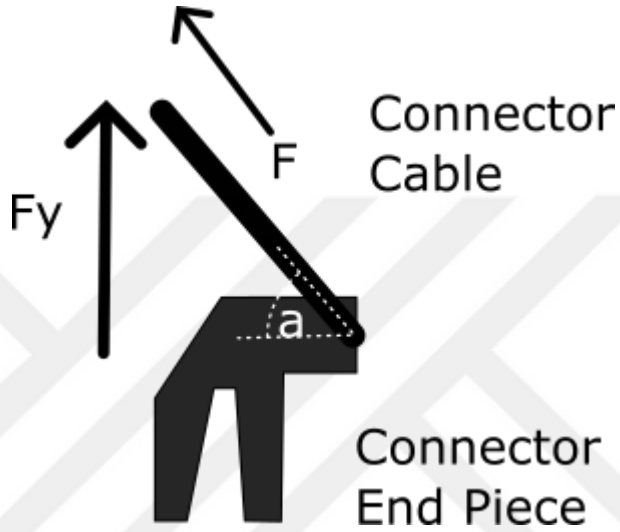


Figure 3.7: Forces on Connector piece applied by cable

Using this information combined with fitted curve change of maximum applicable force by motor for elbow angle can be calculated inside the device. The angle notated with symbol a in the Figure 3.7 is the cable arm angle which was calculated from elbow angle with curve fitting. The elbow angle can be detected by the device with encoder placed on the elbow joint. Plugging in the curve formula to force calculation yields the following formula given in Equation (3.8).

$$Fy = F * \sin(0.00193x^2 - 1.08083x + 136.85267) \tag{3.8}$$

Where F is calculated before as 1,517 kg and x is the elbow angle data collected by the encoder rotator.

When this equation is solved for x=197 vertical component yields as 1.40kg and when it is solved for x=40 it yields vertical component as 0.95 kg.

For a beginner level user, being able to adjust 1.4 - 1 kg weight can be impactful for their training. Since most dumbbell sets increase weight in increments of 2.5 kg, being able to make smaller adjustments can improve overall performance. For a user who can easily use a 5kg dumbbell and can't complete a set with a 7.5 kg dumbbell, the device can adjust that weight as low as 6 kg in order to help with the last sets. Users can still experience an eccentric phase of curl with 7.5 kg further improving efficiency of workout.

## 3.3 Static Analysis of Parts

After calculating forces takes place on parts now static analysis can be performed. During simulations as material Acrylonitrile butadiene styrene (ABS) is selected. Due to being a material that can be injection molded to variable complex shapes with relative ease compared to material that need subtractive manufacturing. ABS is a common material with low weight (1,01 – 1,20 g/cc density) and high tensile strength (>20MPa ) (MatWeb. Material Data Sheet for ABS).

For finite element analysis on a satanic simulation model of parts SimScale is used. SimScale is a cloud computing program that can perform fluid dynamics, finite element analysis and thermal simulations (SimScale Documentation).

To interpret results of the finite element analysis under static load, von mises stress is used. Von mises stress is a method to determine if the force applied on the body exceeds the durability limit of the given body (SimScale, What is Von Mises Stress?).

### 3.3.1 Analysis of Moving Arm

Force on connector cable was calculated at 1,5 kg previously which is nearly equivalent to 15 newtons. During static analysis instead of one 15N force, two 20N force vectors were used, one in vertical and one in horizontal direction, to ensure the system is simulated for higher load than it will experience during usage.

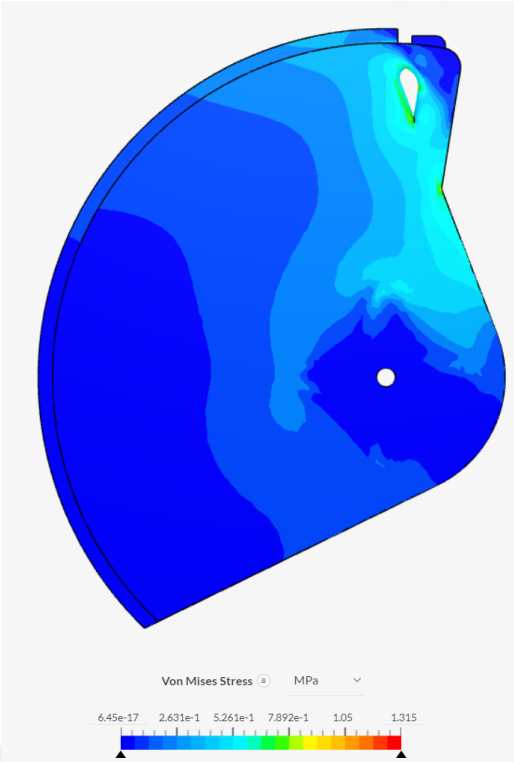


Figure 3.8: Results of static analysis

As result of simulation, there are no regions that experience more than 1MPa of load where selected material rated to withstand 20MPa of load. Sharp inner angles below the cable connection loop experience the highest stress. The amount of stress at those regions is still under the threshold of 1MPa. Figure 3.8 shows analysis results.

### 3.3.2 Analysis of Cable Connector End Piece

Due to changes of cable and arm angle during usage cable connector piece will experience variable amounts of force acted on part with changing direction. This change in force vector direction was calculated in relation to the change of elbow angle above. Collective force affecting this piece by cable can not exceed 1,5 kg in any direction. This force is nearly equal to 15N. During simulation one force vector in horizontal and one in vertical direction is used at same time and both vectors had magnitudes of 20N. This is to ensure part is simulated for a force that will exceed the load that can be experienced during usage. Resulting with a durable design for given application as can bee seen in results of analysis given in Figure 3.9.

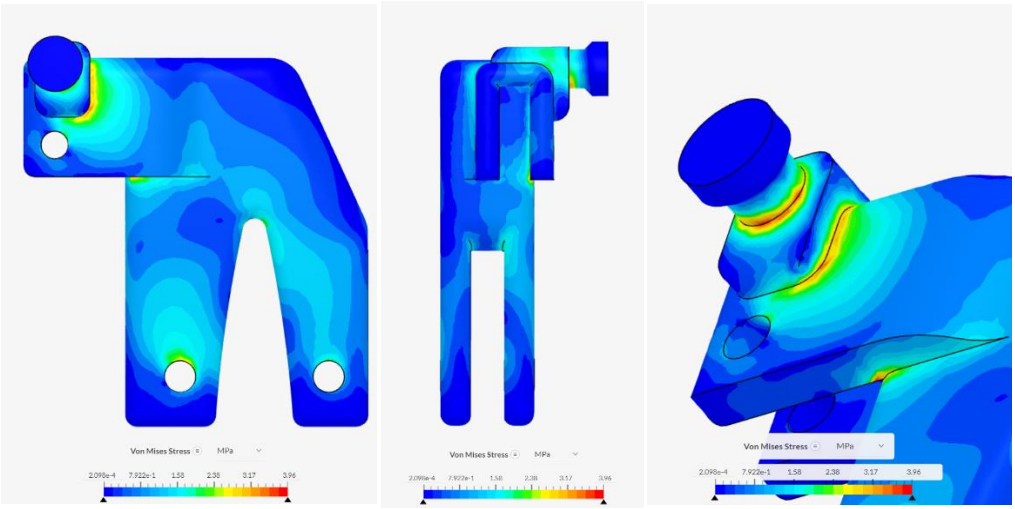


(a) (b) (c)

Figure 3.9: End Piece analysis, (a) side view, (b) front view, (c) focused on stress

As a result of static analysis for cable connector end pieces most of the body sustains stress up to 2 MPa. Which is much lower than given limits (20MPa) of durability for ABS material. Again, the force applied for this simulation is much higher than calculated load. Some regions have experienced higher stress up to 4 MPa. These regions are sharp corners that carry load of the cable.

### 3.3.3 Analysis of Motor Housing

Another important piece that bears the load during assisted movement is the motor housing. For simulating motor housing under load, 20N of force vectors are applied to inner walls applying to outer direction.

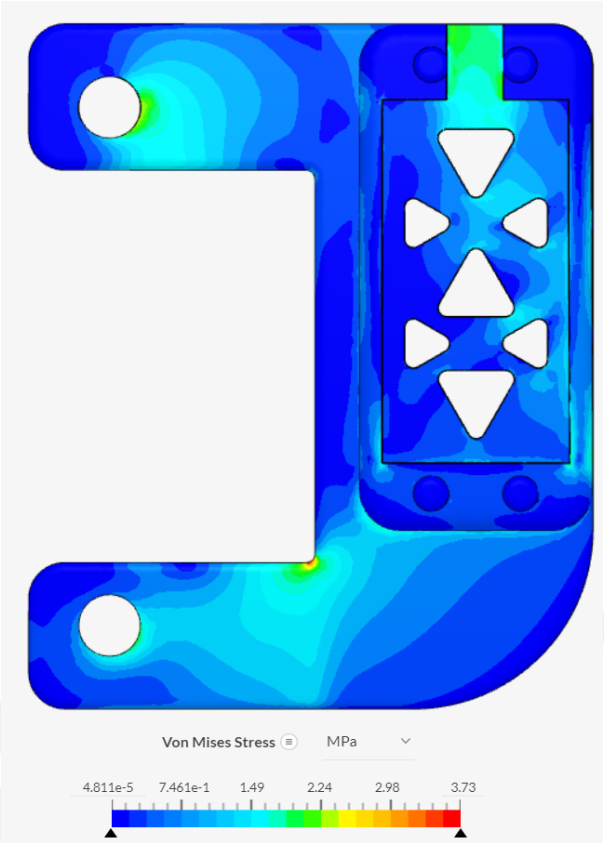


Figure 3.10: Motor Housing Stress Analysis

Motor housing has higher stress regions on its connector legs and bolt holes. These results should be interpreted with keeping in mind that this simulation is made with much higher load compared to other parts. But still, resulting stress acting on part stays under the durability limits of abs material. Analysis result is given in Figure 3.10.

# Chapter 4

# Results & Discussion

As a result of the development process a wearable fitness tracking device is developed. The device can be worn during dumbbell curl exercise and provides real time data. Data can be seen in Figure 4.1.

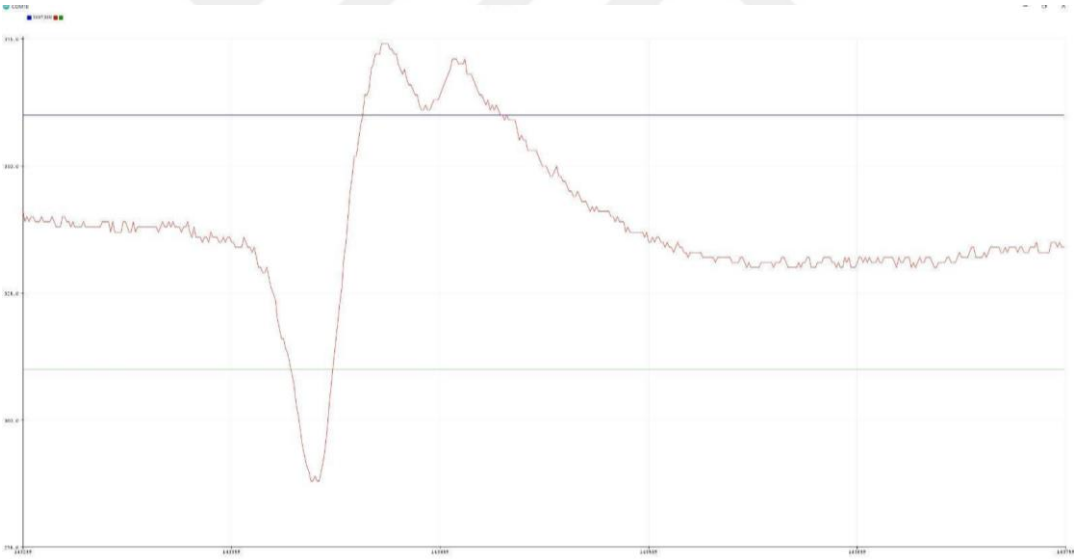

Figure 4.1: Reading from EMG with serial connection to microcontroller

Reading peaks showed the exercise peaks during concentric and eccentric phases which are important to track for tracking muscle mass gains. The rotary encoder that is placed on the axis with the elbow joint provides means to detect position of lower and upper arms relative to each other. With the clock signal in ESP32, it is possible to

track total time of the movement, speed of the lifting motion and duration of concentric and eccentric phases. The processor speed of ESP32 was responsive enough to produce near real-time data. With the EMG sensor, biopotential spikes caused by motor unit firings during the motion can be observed in real time and can be compared with data from rotary encoder. Orthosis device is a suitable platform for the developed exercise tracking device since it provides mechanical support to the joint and increases stability.

Device finalized, creates a method to compare parameters of arm movement with EMG signals during a workout. Methods of using EMG signal analysis on weight workout are mostly limited to research work and applied methods of analysis of workout for muscle gain mostly relies on long term observation. The device developed allows objective observation that relies on measurements that can be understandable without the need of any medical professional can make scientifically curated exercises available for all.

Resulting ability to assist with the motor and moving arm can alter the load up to 1 kg which can be impactful for those who can access only weight sets with 2.5kg increments which are the most common.

Development of Body Position and Muscle State Analyzing Personal Trainer Device presented in this thesis has provided insight for a different method of tracking physical activity. Tracking movement of limbs with a wearable mechanism shown to be a viable method for collecting real-time data without limitations to movement of the user. Yet literature review showed that the success of tracking devices can not be justified by only the technical features of the device but also the user experience provided. To improve the success of the tracker device, high user retention is required. In this regard, the form of a smart watch is considered better since people are inclined to use such devices constantly.

Unlike common products in the market that evaluate activity of completed body from position of user related to earth and the heart rate, a device that can evaluate the position of body parts related to other body parts can meet the need for tracking isolated muscle exercises. Observing muscle biopotential in regard to arm position can yield important data that can help users to maximize stress on muscles and help with

progressive overload. Since progressive overload is often suggested with very little weight compared to full lift it is much more suitable for big group exercises like bench press or squat where adding a 2.5 kg plate is often around from 1/40 to 1/60 the lift where in a exercise like dumbbell curl this can be from ½ to 1/10 of the lift. For a starter that curls 5kg dumbbells reaching 7,5k is not a progressive overload but is a big jump which can be a daunting process. The device that has been developed can help with smaller changes up to 1kg which can ease the translation to bigger weights by reducing their load on muscle and also is able to create a drop set with a dumbbell that the user is already able to curl. After the user reaches their failure rep where they can't curl the weight with correct form again, the device can reduce the weight allowing the user to apply constant stress on muscle resulting in better muscle gain.

# Chapter 5

# Conclusion & Future Work

In concussion development of such devices demonstrates how technology can adapt to forms of activities that require attention to a variety of statistics to improve efficiency. Observing biopotential of muscles in real time provides crucial information about muscle fiber activation. This data can be used to personalize the workout of users to optimize their muscle mass and strength gain. Creating a system that is able to track real time weightlifting exercise without creating limitations to users is a viable method to better understand how exercises affect muscle mass gain and can yield important information about optimizing gain.

Also being able to monitor muscle situations and lifting movement in real time and aiding if needed can change approach on high intensity training. Yet the device has its down sides for example having a bigger form factor and motor that it can not greatly help lifting. This is highly limited due to motor technology where light weight motors are not able to create impactful torque for a given application.

Most important aspect to create user traction is to make a device easy to use and create an invasive method that does not reduce mobility during exercise. This is the main point where watch form excels. Such a bigger device might cause some user backlash but it is for a bi-weekly use to analyze one or two sets of training to track improvements on users. This can excel as a service in gym's. By making such analyzes available for all can create demand for amateur level.

Ability to analyze EMG signals parallel to movement can yield analyzed with un-matched details. In the muscle model discussed, load on muscle can be easily calculated with load and velocity while EMG can detect increase in muscle fiber firing rate. Matching such information and analyzing a person by comparing EMG signal to velocity and load can generate a deeply personalized workout style that is objectively tracked in improvement.

Data safety and used safety is the most important aspect in such device reliability since the main aim should be to “do no harm”. Best method for data safety is an encryption method in ensuring users can't share data accidently. In this project, we don't need any sensitive information, so this also is a safety method to not log any sensitive information. Creating a login system adds a layer of protection also.

Most problematic point of usage of EMG sensors is ensuring measurements from correct positions. In a medical setting a professional can detect the correct position for EMG electrodes. This device needs a fixed position for EMG sensors ensuring every time a user makes a measurement, data is collected from the same points making a consistent measurement possible.

There is room for improvement in the current design of the device. Achieving a portable form factor can highly improve user retention. Creating a mobile application with a better UI might improve user experience also. Although needed calculations for reactive assistant systems with motors are made during this process, refining the user experience needs some trials with users on different fitness levels. As a future work detailed clinical trials are needed with long term application of this device. The current thesis is focused on generating a device that can be considered the first example in its niche, which is generating an end user focused muscle activation tracker. Mobile device UI is currently a simplistic system that aims to get work done. To meet the expectations of end users it needs to be aesthetically satisfying which needs a front-end overhaul and redesign in color scheme.

Adding more sensors on the device such as gyroscopes can be researched to observe if any more useful data can be collected via additional sensors. Although the current system can detect flexion velocity, it works under the proposition that the user performs without “cheating”. That means holding the shoulder joint in a fixed position for biceps curl. Yet many new starters tend to use the shoulder for swing motion to generate more force. This is a logical approach to lift the weight, but the aim is not the lift but is to lift by isolating a muscle group to accomplish muscle mass and strength increase. So after working on clinical trials to create a data set that showcases benefits of the device, it should be a focus point to ensure this system is equipped to detect cheating in much more detail. Currently velocity of elbow bend is used to determine incorrect lifting which is a valuable indicator when compared with eccentric phase

speed yet is not completely reliable. Also rotation on shoulder to keep load closer to the body is another method that can be controversial to say it is cheating or not but is a valuable parameter to measure because it can also determine fatigue of user when combined with an EMG signal as that motion is often used to create mechanical advantage during a lift.

Usage of hydraulic systems for lifting aid can be researched and a better mechanical system might be developed in this aspect. Current state is a proof of concept on using automated aid during lifting movement.

# References


Al-Mulla, M. R., Sepulveda, F., & Colley, M. (2011). A review of non-invasive techniques to detect and predict localized muscle fatigue. Sensors, 4(11), 3545-3594. https://doi.org/10.3390/s110403545

Analog Devices. (2021). AD8232 Heart Rate Monitor Front End Datasheet. Analog Devices. Last visited 09/10, 2023. https://www.analog.com/media/en/technical-documentation/data-sheets/AD8232.pdf

Asadi Dereshgi, H. (2023). Investigating the biomechanics of the biceps brachii muscle during dumbbell curl exercise: A comprehensive approach. European Mechanical Science, 7(4), 209-219. https://dergipark.org.tr/tr/download/article-file/3354119

Brickwood, K., Watson, G., O'Brien, J. E., & Williams, A. (2019). Consumer-based wearable activity trackers increase physical activity participation: systematic review and meta-analysis. JMIR mHealth and uHealth, 4(7), e11819. https://doi.org/10.2196/11819

Chandrasekaran, R., Katthula, V., & Moustakas, E. (2020). Patterns of use and key predictors for the use of wearable healthcare devices by US adults: insights from a national survey. Journal of Medical Internet Research, 10(22), e22443. https://doi.org/10.2196/22443

Dart Overview. (n.d.). Last visited 09/10, 2023. Dart Overview | Dart. https://dart.dev/overview.html

Espressif Systems. (n.d.). ESP32 Datasheet. Espressif Systems. Last visited 09/10, 2023. https://www.espressif.com/sites/default/files/documentation/esp32_datasheet_en.pdf

Farthing, J. P., & Chilibeck, P. D. (2003). The effects of eccentric and concentric training at different velocities on muscle hypertrophy. European Journal of Applied Physiology, 6(89), 578-586. https://doi.org/10.1007/s00421-003-0842-2

Flutter. (n.d.). Last visited 09/10, 2023. Flutter - Build Apps for Any Screen. https://flutter.dev

Gagnon, J., Khau, M., Lavoie-Hudon, L., Vachon, F., & Tremblay, S. (2022). Comparing a Fitbit wearable to an electrocardiogram gold standard as a measure of heart rate under psychological stress: a validation study. JMIR Formative Research, 12(6), e37885. https://doi.org/10.2196/37885

Halim, I., Omar, A. R., Saman, A. M., & Othman, I. (2012). Assessment of muscle fatigue associated with prolonged standing in the workplace. Safety and Health at Work, 1(3), 31-42. https://doi.org/10.5491/shaw.2012.3.1.31

Hermsen, S., Moons, J., Kerkhof, P., Wiekens, C., & Groot, M. d. (2017). Determinants for sustained use of an activity tracker: observational study. JMIR mHealth and uHealth, 10(5), e164. https://doi.org/10.2196/mhealth.7311

Higbie, E. J., Cureton, K. J., Warren, G. L., & Prior, B. M. (1996). Effects of concentric and eccentric training on muscle strength, cross-sectional area, and neural activation. Journal of Applied Physiology, 5(81), 2173-2181. https://doi.org/10.1152/jappl.1996.81.5.2173

Hill, A. V. (1938). The heat of shortening and the dynamic constants of muscle. Proceedings of the Royal Society of London Series B - Biological Sciences, 126, 136–195. https://doi.org/10.1098/rspb.1938.0050

Janney, C. A., & Jakicic, J. M. (2010). The influence of exercise and BMI on injuries and illnesses in overweight and obese adults: a randomized control trial. International Journal of Behavioral Nutrition and Physical Activity, 1(7), 1. https://doi.org/10.1186/1479-5868-7-1

Kononova, A., Li, L., Kamp, K., Bowen, M., Rikard, R. V., Cotten, S. R., & Peng, W. (2019). The use of wearable activity trackers among older adults: focus group study of tracker perceptions, motivators, and barriers in the maintenance stage of behavior change. JMIR mHealth and uHealth, 4(7), e9832. https://doi.org/10.2196/mhealth.9832

Lana, M. R. V., Maia, J., Horta, A., Fonseca, S. T., & Assis, M. G. (2020). 'What if it were like this?' Perception of mothers of children with cerebral palsy about the ankle-foot orthosis of their children: a qualitative study. Child: Care, Health and Development, 47(2), 252-260. https://doi.org/10.1111/cch.12840

Lee, E. C., Fragala, M. S., Kavouras, S. A., & Queen, R. M. (2017). Biomarkers in sports and exercise: Tracking health, performance, and recovery in athletes. Journal of Strength and Conditioning Research, 31(10), 2920–2937. https://doi.org/10.1519/JSC.0000000000002122

Lee, S., Wendland, T., Rao, S., & Magee, C. (2021). Orthotic device use in canine patients: owner perception of quality of life for owners and patients. Frontiers in Veterinary Science, 8. https://doi.org/10.3389/fvets.2021.709364

Liu, W., & Ma, B. (2023). Research on the causes of sports injuries and rehabilitation in university physical training. Revista Brasileira de Medicina do Esporte, 29. https://doi.org/10.1590/1517-8692202329012022_0261

Malek, M. H., Coburn, J. W., & Tedjasaputra, V. (2009). Comparison of electromyographic responses for the superficial quadriceps muscles: cycle versus knee-extensor ergometry. Muscle & Nerve, 6(39), 810-818. https://doi.org/10.1002/mus.21295

MatWeb. (n.d.). Material Data Sheet for ABS. Retrieved 09/10/2023, from https://www.matweb.com/search/DataSheet.aspx?MatGUID=3a8afcddac864d4b

Mercer, K., Giangregorio, L., Schneider, E. C., Chilana, P. K., Li, M. W., & Grindrod, K. (2016). Acceptance of commercially available wearable activity trackers among adults aged over 50 and with chronic illness: a mixed-methods evaluation. JMIR mHealth and uHealth, 1(4), e7. https://doi.org/10.2196/mhealth.4225

Mitchell, C. J., Churchward-Venne, T. A., Bellamy, L. M., Parise, G., Baker, S. K., & Phillips, S. M. (2013). Muscular and systemic correlates of resistance training-induced muscle hypertrophy. PLoS ONE, 10(8), e78636. https://doi.org/10.1371/journal.pone.0078636

Musarò, A., McCullagh, K. J. A., Naya, F. J., Olson, E. N., & Rosenthal, N. (1999). Igf-1 induces skeletal myocyte hypertrophy through calcineurin in association with gata-2 and nf-atc1. Nature, 6744(400), 581-585. https://doi.org/10.1038/23060

Morton, R. A., McGlory, C., & Phillips, S. M. (2015). Nutritional interventions to augment resistance training-induced skeletal muscle hypertrophy. Frontiers in Physiology, 6. https://doi.org/10.3389/fphys.2015.00245

Motl, R., & Sandroff, B. (2015). Benefits of exercise training in multiple sclerosis. Current Neurology and Neuroscience Reports, 9(15). https://doi.org/10.1007/s11910-015-0585-6

Norrbrand, L., Fluckey, J. D., Pozzo, M., & Tesch, P. A. (2007). Resistance training using eccentric overload induces early adaptations in skeletal muscle size. European Journal of Applied Physiology, 3(102), 271-281. https://doi.org/10.1007/s00421-007-0583-8

Olsen, O. E., Myklebust, G., Engebretsen, L., Holme, I., & Bahr, R. (2005). Exercises to prevent lower limb injuries in youth sports: cluster randomised controlled trial. BMJ, 7489(330), 449. https://doi.org/10.1136/bmj.38330.632801.8f

O. S. P. O. F., Society, G., Of, A. A., O. S. P. O. F. (2001). Guideline for the prevention of falls in older persons. Journal of the American Geriatrics Society, 5(49), 664-672. https://doi.org/10.1046/j.1532-5415.2001.49115.x

Phan, T. T., Barnini, N., Xie, L., Martinez, A., Falini, L., Abatemarco, A., & Werk, L. N. (2018). Feasibility of using a commercial fitness tracker as an adjunct to family-based weight management treatment: Pilot randomized trial. JMIR mHealth and uHealth, 11(6), e10523. https://doi.org/10.2196/10523

Puri, A., Kim, B., Nguyen, O., Stolee, P., Tung, J., & Lee, J. S. (2017). User acceptance of wrist-worn activity trackers among community-dwelling older adults: mixed method study. JMIR mHealth and uHealth, 11(5), e173. https://doi.org/10.2196/mhealth.8211

Ridgers, N. D., McNarry, M. A., & Mackintosh, K. A. (2016). Feasibility and effectiveness of using wearable activity trackers in youth: a systematic review. JMIR mHealth and uHealth, 4(4), e129. https://doi.org/10.2196/mhealth.6540

Room, J., Hannink, E., Dawes, H., & Barker, K. (2017). What interventions are used to improve exercise adherence in older people and what behavioral techniques are they based on? A systematic review. BMJ Open, 12(7), e019221. https://doi.org/10.1136/bmjopen-2017-019221

Sañudo, B., Hoyo, M. d., Muñoz-López, A., & Abt, G. (2019). Pilot study assessing the influence of skin type on the heart rate measurements obtained by photoplethysmography with the Apple Watch. Journal of Medical Systems, 7(43). https://doi.org/10.1007/s10916-019-1325-2

Sawyer, S., Schram, B., Pope, R., & Orr, R. M. (2021). Profiling the injuries sustained by police trainees undergoing initial training: a retrospective cohort study. International Journal of Environmental Research and Public Health, 14(18), 7335. https://doi.org/10.3390/ijerph18147335

Schrager, J. D., Shayne, P., Wolf, S., Das, S., Patzer, R. E., White, M., … & Heron, S. (2017). Assessing the influence of a Fitbit physical activity monitor on the exercise practices of emergency medicine residents: a pilot study. JMIR mHealth and uHealth, 1(5), e2. https://doi.org/10.2196/mhealth.6239

Seynnes, O. R., Boer, M. D. D., & Narici, M., (2007). Early skeletal muscle hypertrophy and architectural changes in response to high-intensity resistance training. Journal of Applied Physiology, 1(102), 368-373. https://doi.org/10.1152/japplphysiol.00789.2006

SimScale. (n.d.). SimScale Documentation. Retrieved 09/10/2023. https://www.simscale.com/docs/

SimScale. (n.d.). What is Von Mises Stress? SimWiki. Retrieved 09/10/2023, from https://www.simscale.com/docs/simwiki/fea-finite-element-analysis/what-is-von-mises-stress

Sirisunhirun, P., Bandidniyamanon, W., Jrerattakon, Y., Muangsomboon, K., Pramyothin, P., Nimanong, S., & Chotiyaputta, W. (2022). Effect of a 12-week home-based exercise training program on aerobic capacity, muscle mass, liver and spleen stiffness, and quality of life in cirrhotic patients: a randomized controlled clinical trial. BMC Gastroenterology, 1(22). https://doi.org/10.1186/s12876-022-02147-7

Stove MP, Haucke E, Nymann ML, Sigurdsson T, & Larsen BT. Accuracy of the wearable activity tracker Garmin Forerunner 235 for the assessment of heart rate during rest and activity. Journal of Sports Science, 37(8), 895–901.

Sullivan, A. N., & Lachman, M. E. (2017). Behavior change with fitness technology in sedentary adults: A review. Frontiers in Public Health, 4. https://doi.org/10.3389/fpubh.2016.00289

Tanimoto, M., & Ishii, N. (2006). Effects of low-intensity resistance exercise with slow movement and tonic force generation on muscular function in young men. Journal of Applied Physiology, 4(100), 1150-1157. https://doi.org/10.1152/japplphysiol.00741.2005

Telama, R. (2009). Tracking of physical activity from childhood to adulthood: A review. Obesity Facts, 3(2), 187-195. https://doi.org/10.1159/000222244

TowerPro. (n.d.). MG995 Servo Datasheet. TowerPro. Last visited 09/10, 2023. http://www.towerpro.com.tw/product/mg995/

Wackerhage, H., Schoenfeld, B. J., Hamilton, D. C., Lehti, M., & Hulmi, J. J. (2019). Stimuli and sensors that initiate skeletal muscle hypertrophy following resistance exercise. Journal of Applied Physiology, 1(126), 30-43. https://doi.org/10.1152/japplphysiol.00685.2018

# Appendices

# Appendix A

# Technical Drawings of Parts

## Motor Housing

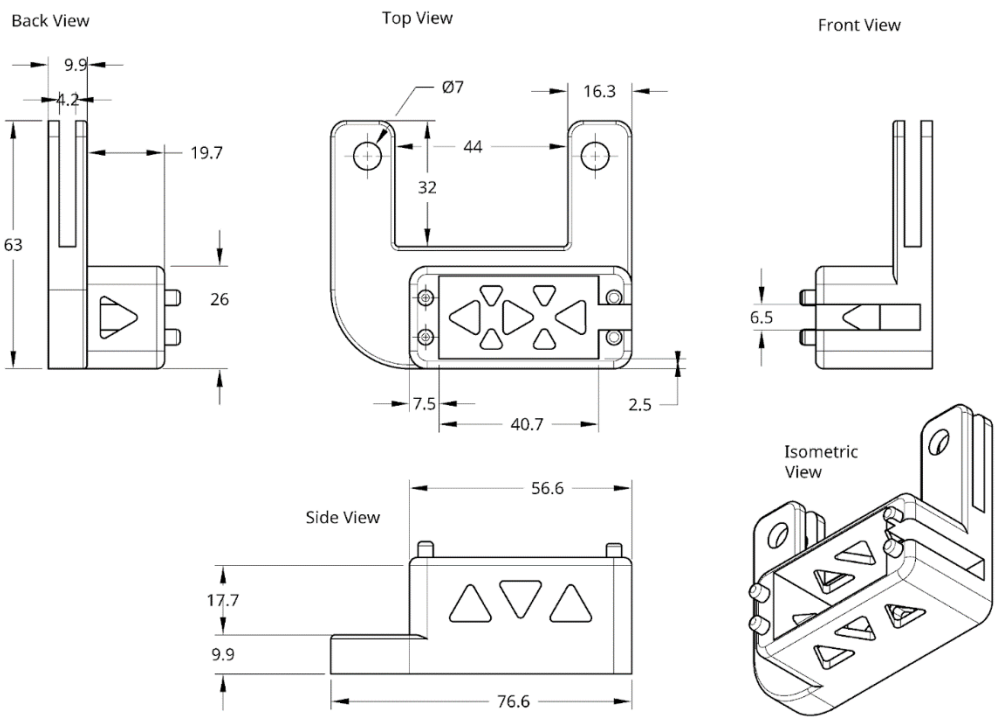

# Moving Arm

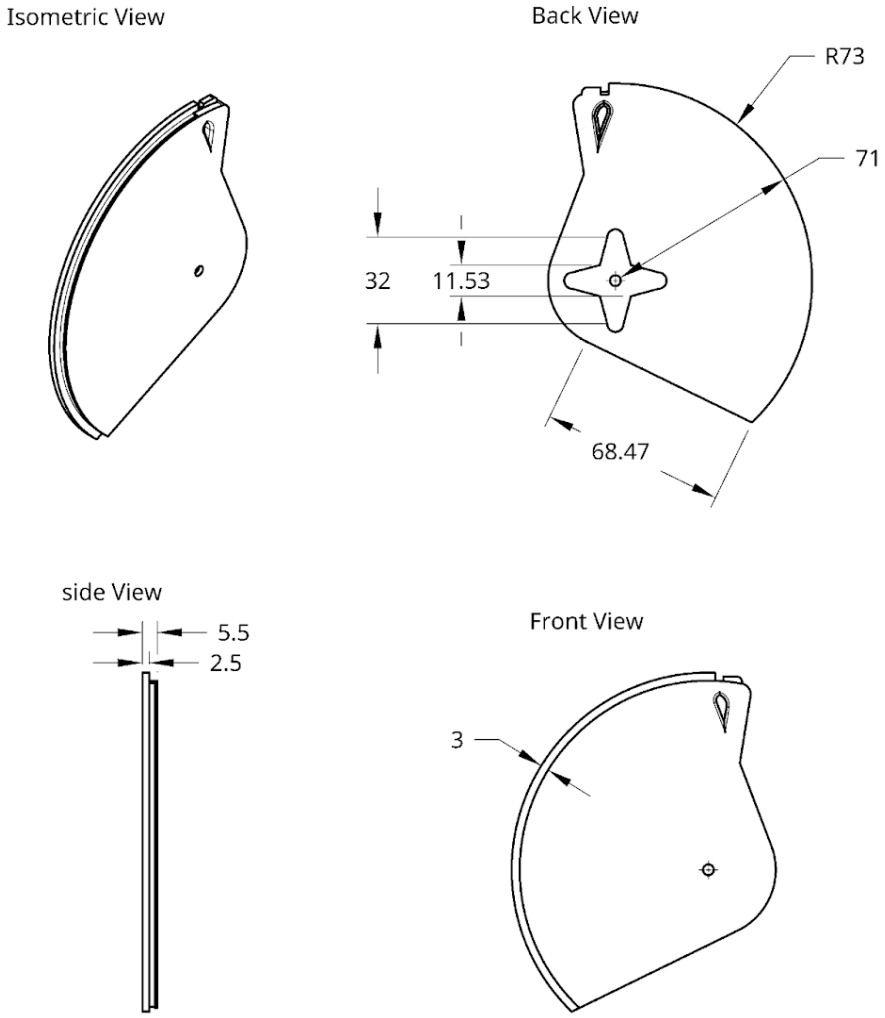
Isometric View
Back View
R73
71
32
11.53
68.47
side View
5.5
2.5
Front View
3

Moving End of Rotary Encoder Holder

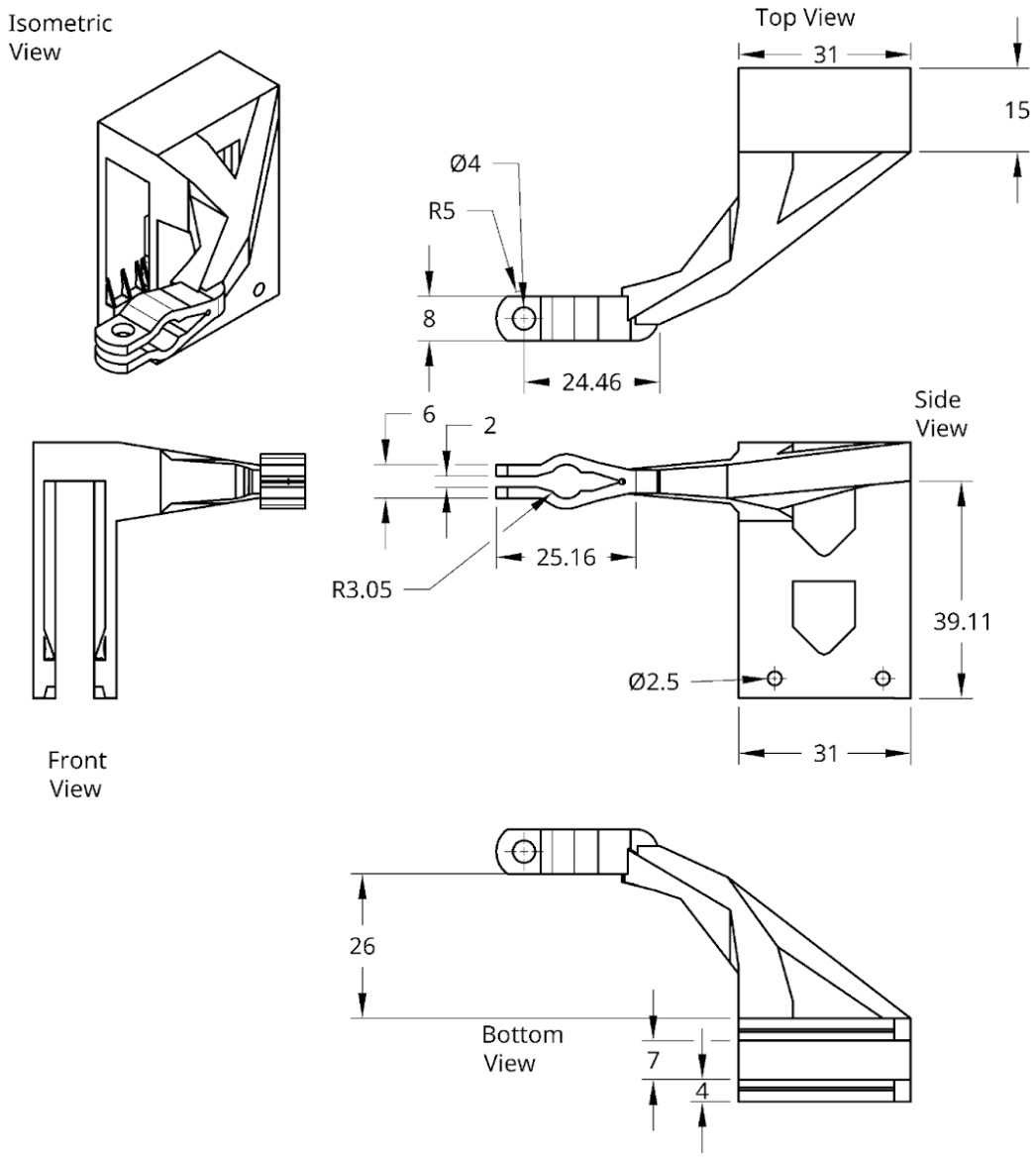

# Appendix B

# Curve Fitting

```
# required libraries are imported

# numpy is used for mathematical calculations

import numpy as np

#scipy used for curve fitting

from scipy.optimize import curve_fit

#matplotlib is used for data visualization

import matplotlib.pyplot as plt

# x is elbow and y is cable - arm angle

x = np.array([40, 50, 60, 70, 80, 90, 100, 110, 120, 130, 140, 150, 160, 170, 179])

y = np.array([100.317, 87.043, 77.023, 68.651, 61.234, 54.42, 48.012, 41.892,
35.984, 30.237, 24.616, 19.097, 13.662, 8.299, 3.525])

# A quadratic function is defined. this will be the final format of our data

def quadratic_func(x, a, b, c):

        return a * x**2 + b * x + c


# using curve_fit function from scipy library we can perform a curve fitting
calculation

params, covariance = curve_fit(quadratic_func, x, y)

# The parameters are returned as a numpy.ndarray named params we need to get
them into variables
```

```
a, b, c = params

# Using matplotlib a plot can be drawn to visualize the data

plt.scatter(x, y, label='Simulation Angles')

plt.plot(x, quadratic_func(x, a, b, c,), color='red', label='Fitted Curve')

plt.xlabel('Elbow Angle')

plt.ylabel('Cable - Arm Angle')

plt.legend()

plt.show()


# Print the parameters of the fitted curve

print(f'Fitted parameters: a={a}, b={b}, c={c}')

# Print the formula of the fitted curve

print(f"The fitted quadratic curve is: y = {a}x^2 + {b}x + {c}")
```

# Appendix C

# Publications from the Thesis

**Journal Articles**

**1**. Arslan, O. Journal of Intelligent Systems with Applications (2022), Development of Personal Trainer Device for Exercise and Rehabilitation Tracking (e-ISSN 2667-6893).

# Curriculum Vitae

Name Surname : Onuralp Arslan

Education:

2015–2020 İzmir Kâtip Çelebi University, Dept. of Biomedical Eng.

Work Experience:

2021 – 2023 ONARFA Mühendislik AR-GE Ltd. Şti.

Publications (if any):

1.Arslan, O., Sarpay, A., Yalçın, İ., 5. International Conference on Medical Devices (ICMD'2022), Relation of Age, Blood Sugar and Blood Cholesterol Levels with Heart Diseases.

2.Sarpay, A., Arslan, O., Yalçın, İ., 5. International Conference on Medical Devices (ICMD'2022), The Relationship Between Vascular Occlusion and Gender in the Likelihood of Developing Heart Disease.

3. Arslan, O. Journal of Intelligent Systems with Applications (2022), Development of Personal Trainer Device for Exercise and Rehabilitation Tracking (e-ISSN 2667-6893).