ASPECT AND THEMATIC SUFFIXES IN ŞAVŞAT GEORGIAN

REYHAN LÜTFİYE OKUMUŞ

BOĞAZİÇİ UNIVERSITY

2019

ASPECT AND THEMATIC SUFFIXES IN ŞAVŞAT GEORGIAN

Thesis submitted to the

Institute for Graduate Studies in Social Sciences

in partial fulfillment of the requirements for the degree of

Master of Arts

in

Linguistics

by

Reyhan Lütfiye Okumuş

Boğaziçi University

2019

Aspect and Thematic Suffixes in Şavşat Georgian

The thesis of Reyhan Lütfiye Okumuş

has been approved by:

Assoc. Prof. Balkız Öztürk Başaran
(Thesis Advisor)

Prof. Aslı Göksel

Assist. Prof. Dilek Uygun
(External Member)

July 2019

DECLARATION OF ORIGINALITY

I, Reyhan Lütfiye Okumuş, certify that

- I am the sole author of this thesis and that I have fully acknowledged and documented in my thesis all sources of ideas and words, including digital resources, which have been produced or published by another person or institution;
- this thesis contains no material that has been submitted or accepted for a degree or diploma in any other educational institution;
- this is a true copy of the thesis approved by my advisor and thesis committee at Boğaziçi University, including final revisions required by them.

Signature.....

Date ....08.08.2019.....

ABSTRACT

Aspect and Thematic Suffixes in Şavşat Georgian

This study investigates the morpho-syntactic features of Thematic Suffixes (TS) in Şavşat Georgian, a non-literal dialect of Georgian spoken in the northeast of Turkey. Specifically, it aims to provide an analysis on the different realisations of TS and relate these realisations with Aspect. For this purpose, we first comprehensively describe the environments in which Thematic Suffixes -ob, -eb, -av and -ev appear. Verbs with different Aktionsart features are examined in various tense conjugations. As a result of this analysis, it is argued that the presence of TS denotes imperfectivity in Şavşat Georgian. Besides, each realisation of TS specifically denotes a certain lexical aspectual class; that is, -eb denotes states, -av denotes activity, -eb denotes change of state and -ev denotes two-phase achievements.

To complete the discussion on morphosyntactic features of the Thematic Suffixes, we offer a syntactic analysis based on a two-layered Aspect head following Travis (2010). In such a mechanism, TS is base generated in Inner Aspect head to mark the lexical aspectual class of the verb and then it moves into Outer Aspect head to check imperfectivity. Causative construction is also accounted for with a similar mechanism in which a certain realisation of TS, i.e. -eb, always occurs.

ÖZET

Şavşat Gürcücesinde Kılınış ve Tematik Ekler

Bu çalışmada Gürcücenin Türkiye'nin kuzeydoğusunda konuşulan ve yazılı olmayan bir lehçesi olan Şavşat Gürcücesindeki Tematik Ekler'in biçimbirim ve sözdilimsel özellikleri incelenmektedir. Bu çalışma özellikle Tematik Ekler'in farklı kullanımlarını çözümlemeyi ve bu kullanımları Kılınış ile ilişkilendirmeyi hedeflemektedir. Bu amaç doğrultusunda öncelikle Tematik Ekler -*ob*, -*eb*, -*av* ve -*ev*'in kullanıldığı durumlar detaylıca betimlenmiştir. Çeşitli kılınış özelliklerine sahip fiiller farklı zaman çekimlerinde incelenmiştir. Bu çözümlemenin bir sonucu olarak bir fiil çekiminde Tematik Ekler'in kullanımının Şavşat Gürcücesinde bitmemişlik kılınışını işaret ettiği öne sürülmüştür. Bunun yanı sıra Tematik Ekler'in her bir biçiminin özellikle belirli bir sözlüksel kılınışı gösterdiği; -*eb* ekinin durum, -*ev* ekinin etkinlik, -*eb* ekinin durum değişimi ve -*ev* ekinin iki aşamalı başarı gösterdiği öne sürülmüştür.

Tematik Ekler'in biçimbirim ve sözdilimsel özellikleri tartışmasını tamamlamak adına Tematik Ekler için Travis (2010) tarafından önerilen iki katmanlı Kılınış başı temel alınarak bir sözdizimsel çözümleme önerilmiştir. Böyle bir düzenekte Tematik Ekler sözlüksel kılınışı işaret etmek için İç Kılınış başında oluşup bitmemişlik kılınışını işaret etmek için Dış Kılınış başına hareket eder. Daima Tematik Ek -*eb* ile oluşan ettirgen yapıların sözdizimi de benzer bir düzenekle açıklanabilmektedir.

ACKNOWLEDGEMENTS

I would like to start with expressing my sincere gratitude to my advisor Assoc. Prof. Balkız Öztürk Başaran. She was the person who encouraged me to scientifically embrace my linguistic heritage despite all the concerns that I had regarding the complexity of Georgian language. She has been an excellent mentor. Without her patience, professional guidance and invaluable feedback, this thesis literally could not have been completed. Whenever I felt depressed and desperate against the data, talking to her was sufficient for me to see the sun again. I honestly say that I will always be indebted to her motivational comments, care and exceptional kindness.

I wish also thank my thesis committee member Prof. Aslı Göksel for her feedback and valuable comments on my thesis, which critically contributed to its content. I am grateful for everything that I learnt from her during my undergraduate and graduate studies.

I would also thank my thesis committee member Assist. Prof. Dilek Uygun for her feedback and insightful comments.

I wish thank the professors of our department who made me love linguistics and contributed me a lot during my undergraduate and graduate years. I am thankful to Prof. Sumru Özsoy, Assoc. Prof. Meltem Kelepir Wood, Assist. Prof. Markus A. Pöchtrager, Assoc. Prof. Mine Nakipoğlu Demiralp, Assist. Prof. Kadir Gökgöz, Assoc. Prof. Elena Guerzoni, Assoc. Prof. Didar Akar and Prof. Eser Erguvanlı Taylan for their excellent teaching.

I owe a great debt of gratitude to my informants who made this earliest study on Şavşat Georgian possible. My dearest mother Fatma Okumuş, my great-uncle Şerafettin

Kılıç and my grandfather Osman Kaya are the ones who bore with my never-ending data elicitation sessions uncomplainingly. I also wish to thank Manana Gurgenidze who provided me with the Standard Georgian data despite her increasingly busy schedule. My special thanks are for Eşref Yılmaz and Barış Altun who taught me the *an, ban, gan* (abc) of Georgian language with its magical-like script.

My sincere thanks also go to my friends who believed in me and my thesis even I hesitated myself. I am so fortunate to have Arzu, Ayşe Buse, Basri, Duygu, Ebru, Elif, Esra, Figen, Hatice, Kadriye, Kübra, Meryem Cemre, Reyhan, Samet, Sevda, Şüheda, Yasemin, Zehra and Zeynep as my crew. I also thank my linguist fellows and instructor colleagues for their support and encouragement during my thesis journey.

The most supportive of all was my family. I once more thank my mother Fatma Okumuş, the source of my Georgian heritage, and my father Temel Okumuş for being unarguably the best parents on earth. My special thanks also extend to my brother Muhammet Can Okumuş, my dear Mami, who always motivated me saying that “You were able to graduate from Boğaziçi once, then you will be able to do it twice!”.

As the last word, I dedicate this thesis to my grandmother Lütfiye, a true Georgian woman with her beauty and dignity, who left her name behind for me and passed away when my mother was only at the age of two.

TABLE OF CONTENTS

CHAPTER 1: INTRODUCTION 1

1.1 The aim of the thesis 1

1.2 Informants and data collection 2

1.3 General properties of Georgian and Şavşat Georgian 3

1.4 Outline of the thesis 20

CHAPTER 2: THEMATIC SUFFIXES IN THE LITERATURE 22

2.1 Introduction 22

2.2 Aranson (1990) 25

2.3 Hewitt (1995) 26

2.4 Lyle (1997) 28

2.5 Nash (2017) 34

2.6 Nash (2018) 35

2.7 Lomashvili (2010) 46

2.8 Öztürk & Taylan (2017) 47

2.9 Summary 51

CHAPTER 3: THEMATIC SUFFIXES IN ŞAVŞAT GEORGIAN 52

3.1 Introduction 52

3.2 Thematic Suffixes and grammatical aspect 54

3.3 Thematic Suffixes and lexical aspect 57

3.4 Thematic Suffixes and argument structure 79

3.5 Summary 89

CHAPTER 4: SYNTAX OF THE THEMATIC SUFFIXES 91

4.1 Introduction 91

4.2 Travis (2010): Inner and outer aspect 95

4.3 Nash (2018): Syntax of Georgian causatives 100

4.4 Syntactic representation of different verb types in Şavşat Georgian 101

4.5 Summary 113

CHAPTER 5: CONCLUSION 114

5.1 Summary of the claims and findings 114

5.2 Suggestions for future research 115

REFERENCES 117

APPENDIX: ŞAVŞAT GEORGIAN CONJUGATED VERB LIST 120

LIST OF TABLES

Table 1. Standard Georgian Verb Paradigm 8

Table 2. Şavşat Georgian Verb Paradigm 9

Table 3. Şavşat Georgian Verb Class-Case-Screeve Paradigm 9

Table 4. The Verbal Affixal System of Standard Georgian 13

Table 5. Subject Agreement Markers 14

Table 6. Object Agreement Markers 14

Table 7. Conjugation Template of the Verb Tser (Write) in Present Series 15

Table 8. Thematic Suffixes in Şavşat Georgian 52

Table 9. Syntactic and Semantic Correlates of the Thematic Suffixes 79

Table 10. Syntactic and Semantic Correlates of Thematic Suffixes in Şavşat Georgian 83

Table 11. Causative Constructions in Şavşat Georgian 88

Table 12. TS Realisation in Present Causative Structures 93

Table 13. TS Realisation in Aorist Causative Structures 94

Table 14. Features of Verb Classes in Travis (2010) 98

ABBREVIATIONS

1	1st person
2	2nd person
3	3rd person
Dat	Dative
Erg	Ergative
INCH	Inchoative Marker
NL	Nominaliser
Nom	Nominative
P/FSF	Present/Future Stem Formant
Pl	Plural
Pres	Present
PV	Preverb
RMP	Reflexive-Medio-Passive Marker
Sg	Singular
TS	Thematic Suffix
Val	Valency Marker
VV	Version/Valency Vowel

CHAPTER 1

INTRODUCTION

1.1 The aim of the thesis

The aim of the current study is to examine the different morphological realisations of the Thematic Suffixes and to provide a descriptive analysis on how they map onto semantics and syntax in Şavşat Georgian, which is a dialect of Georgian spoken in the northeast of Turkey. As a part of complex verb structure, the function and meaning of the Thematic Suffixes lack consensus in the literature though they are traditionally associated with aspect (Flinn, 2017).

Related Kartvelian literature is mainly based on Standard Georgian spoken by mostly Georgian-Russian bilinguals who live in Georgia. However, this study aims to explore the other side of the border: How the Thematic Suffixes interact with the meaning of verb complex in Şavşat dialect spoken by mostly Georgian-Turkish bilinguals who live in Turkey. I will therefore try to answer following questions:

i) What are the different realisations of the Thematic Suffixes in Şavşat Georgian?

ii) How do the Thematic Suffixes interact with the grammatical/functional aspect?

iii) Do different realisations of the Thematic Suffixes relate with Aktionsart/lexical aspect, and if so, how?

iv) Do the Thematic Suffixes reflect any information about the argument structure of the verb?

1.2 Informants and data collection

The discussions offered throughout the thesis are based on data that has been collected mainly from three informants. All these informants are Turkish-Şavşat Georgian bilingual speakers whose mother tongue is Georgian.

Informant 1 is fifty-seven years old. She is a high-school graduate. She was exposed to Turkish at the age of seven in school environment since her parents spoke only Georgian in household. At the age of nine, her family migrated from Şavşat and Turkish has started to become her dominant language since she started to communicate mostly in Turkish within the school and the social environment. Now, she uses Georgian in daily basis to speak with her relatives however the percentage of Georgian use does not exceed 30-35 % within total communication.

Informant 2 is seventy years old. He is a high-school graduate. He was exposed to Turkish at around the age of seven in school. He also migrated from Şavşat but Georgian is still his dominant language since he and his family use mostly Georgian in household. We can say that his daily language use comprises 60 % Georgian -some days even more- out of the total communication.

Informant 3 is eighty-six years old. He did not get a formal education. He was exposed to Turkish at around the age of twenty during his military service and he also learned how to read and write in Turkish at that time. After migrating from Şavşat, he has started to use Turkish as the second language in workplace environment. Thus, we can say that his bilingualism is almost balanced between Turkish and Georgian as he uses both languages with the same frequency.

To collect data, we made use of a verb list which includes different verb types with different Aktionsart features. The reader is referred to the Appendix section for the

verb list. The verbs were conjugated in different tenses via native speakers during mostly one to one data elicitation sessions. The target structure was the verb form conjugated for third person singular subject without object agreement involvement.

To compare Şavşat dialect with standard dialect, a separate data elicitation session was held with a native speaker of Standard Georgian. Informant 4 is from Tbilisi, Georgia. She is 58 years old and has a BA and MA degree in teaching Georgian as a foreign language. As she is a professional teacher of Georgian, she is more than a naive informant.

1.3 General properties of Georgian and Şavşat Georgian

The Georgian language is a member of the South Caucasian/Kartvelian language family together with Svan, Mingrelian and Laz. It is mainly spoken in Georgia, Turkey, Iran and Russia by about 4.5 million people.

1.3.1 Dialects of Georgian

Georgian can be divided into five main dialect groups. Gigineishvili, Topuria and K'avtaradze (1961) sort these groups as northeast dialects Mokhevian, Mtiuletian-Gudamaq'rian, Khevsurian, Pshavian, Tushetian; eastern dialects K'akhetian, Ingiloan (in Azerbaijan), Fereidanian (in Iran), Tianetian; central dialects Kartlian, Javakhian, Meskhian; southwest dialects Gurian, Ach'arian, Imerkhevian (in Turkey) and northwest dialects Imeretian, Lechktumanian, Rach'an (as cited in Tuite, 1989).

Although Imerkhevi is a particular region in Artvin district of Turkey, the Georgian dialects spoken throughout Turkey are called Imerkhevian in the literature. To

some extent, this can be a valid classification because Georgian people from different regions of Turkey -such as Şavşat, İnegöl, Sinop- can communicate regardless of some phonological, morphological and syntactic differences. Thus, it is possible to claim that there is mutual intelligibility among the sub-dialects of Imerkhevian.

For the current thesis, the data is mainly based on the speakers who are from Şavşat/Imerkhevi region. However, to exclude possible structural differences among sub-dialects of Georgian spoken in Turkey, we will refer to the current data as Şavşat Georgian instead of Imerkhevian.

Figure 1 shows the map of regions where Şavşat Georgian is spoken throughout Turkey. Şavşat is the fountainhead of this dialect with its several villages such as Çağlayan (Hevsrul)[1], Çukur (Çihor), Demirci (Daba), Dereiçi (Dasamop), Dutlu (Sürevan), Erikli (Agara), Maden (Bazgiret), Mısırlı (İvet), Oba (Ube), Tepebaşı (Ziyos) and Yağlı (Zakiyet). Other regions are places to where speakers of Şavşat dialect migrated *en masse*. Akyazı district is populated with migrated Şavşat speakers in Sakarya province similar to Gebze and Derince districts of Kocaeli province. Also there are Şavşat speakers in Karacabey and İnegöl disctricts of Bursa province. Unfortunately, there is no data regarding the number of Şavşat dialect speakers. However, it is estimated that the number is not fewer than 100.000.

Beside these areas, Georgians of Turkey also live in Amasya, Balıkesir, Bolu, Giresun, Ordu, Samsun, Sinop and Tokat (Çiloğlu, 1993). However, we did not include these provinces to our map since we do not have any information regarding their

[1] The original Georgian names of the villages were changed officially with Turkish names during the first years of the Republic of Turkey (Tunçel, 2000). However, we provide the original names in parentheses since residents generally use the Georgian names.

language use. In Çiloğlu, it is stated that the estimated number of total Georgian population is between 1-1.5 million in Turkey.

Figure 1. The location of Şavşat Georgian.

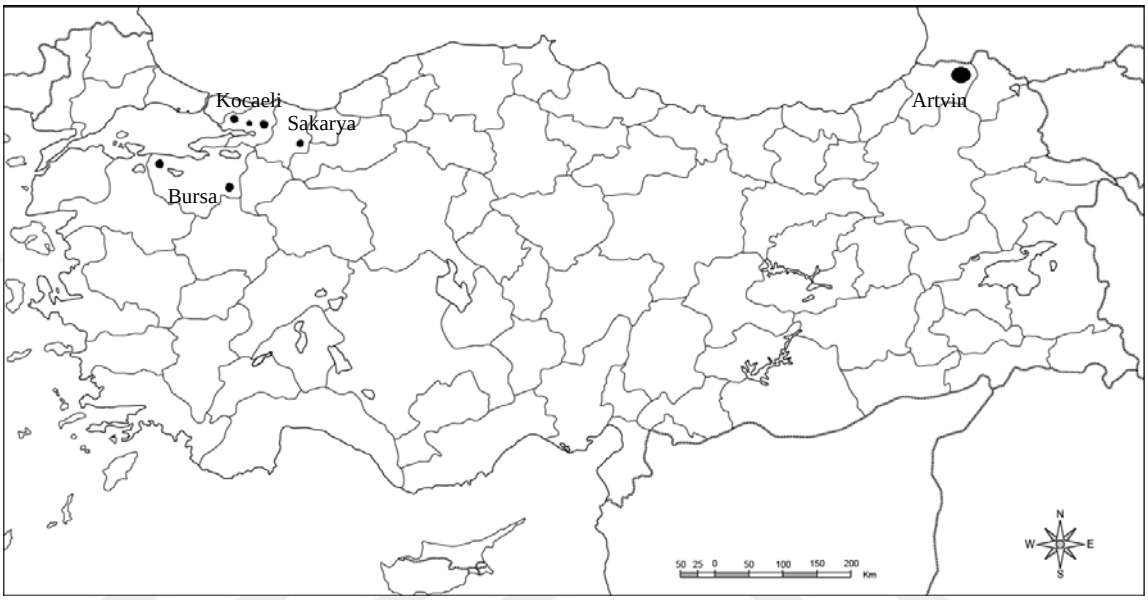

1.3.2 General morpho-syntactic properties of Şavşat Georgian

As there is no previous study on Şavşat Georgian, we will introduce some basics of morphological and syntactic properties of this dialect which are relevant to the current study. Phonological properties are not included as they are beyond the scope of this thesis.

1.3.2.1 The noun in Şavşat Georgian

In Şavşat Georgian, nominals are only inflected for two grammatical categories; number and case. Similar to other Kartvelian languages, Şavşat Georgian does not display gender or class morphology.

Number

Şavşat Georgian nominals are inflected for plural as shown below:

(1)	Singular	Plural
	a. vaşli	vaşl-ebi
	apple	apples
	b. sark'e	sark'-ebi
	mirror	mirrors
	c. zroxa	zrox-ebi
	cow	cows
	d. lobio	lobi-ebi
	bean	beans

As seen in the examples, plural marker is *-ebi* in Şavşat Georgian. In plural declension, the final vowel of the word is deleted before adding *-ebi*. This is the general pattern as Georgian nouns always end with vowel sounds *-i, -e, -a, -o* and *-u*.

Case

Georgian has seven nominal cases including nominative, ergative, dative, genitive, instrumental, adverbial and vocative. Nevertheless, only nominative, ergative and dative structures are within the scope of the current discussion because they are the cases for verbal arguments, such as the subject, the direct object and the indirect object.

(2)	Case	Ending	Example
	Nominative	-i / -ay	saxl-i / Ayşe-ay / Ahmet-ay
	Ergative	-(a)ma	Ayşe-ma / Ahmet-ama
	Dative	Ø / -(a)s	saxl / saxl-s
			Ayşe-s /Ahmet-as

In Şavşat Georgian, the nominative case marker has two different realisations depending on the semantic features of the word; *-i* is used for common nouns and *-ay* is used for proper nouns. In Old Georgian all nouns ended with *i/y*, it is possible that nominative marker *-ay* in Şavşat Georgian is the remnant of this archaic form with its specialized usage in proper nouns.

Unlike Standard Georgian ergative marker *-m(a)*, Şavşat Georgian marks ergative case with *-(a)ma*. The first vowel of the marker drops when it attaches a noun which ends with a vowel.

Distinct from the standard dialect, Şavşat Georgian has two forms for dative case marking; one does not have any phonological realisation and the other is *-(a)s*. The details of their usage will be discussed in the following section.

1.3.2.2 The verb in Şavşat Georgian

In Standard Georgian, verbs are primarily divided into classes based on their function. Class 1 verbs are transitive verbs while Class 2 verbs are intransitive in meaning which include also passive structures. Class 3 verbs are medial verbs which consist of weather, light, sound and work related verbs. Lastly, Class 4 verbs are indirect verbs that employ dative case for their subject and nominative case for their object (Campbell, 2013).

The secondary classification of Georgian verbs is based on how they are conjugated. Contrary to mainstream tendency, Georgian conjugation patterns are not called as tense because each conjugation pattern conveys information about aspect and modality beside tense. Instead, the term *screeve* is used for certain tense-aspect-mood/modality combinations typical to Georgian. Georgian has eleven screeves but some are archaic or used rarely (Campbell, 2013, p.12).

One more term to be touched upon is *series*. Each screeve belongs to a series which employs a particular class-case-screeve combination. Georgian has three series; present, aorist and perfect. Table 1 presents the verb paradigm of Standard Georgian which is valid for Şavşat dialect to some extent.

Table 1. Standard Georgian Verb Paradigm

Series	**Subseries**	**Screeve**
Present	Present	Present
		Imperfect (Past Continuous)
		Present Subjunctive
	Future	Future Simple
		Conditional
		Future Subjunctive
Aorist		Aorist (Past Simple)
		Optative
Perfect		Present Perfect (First Evidential)
		Pluperfect (Second Evidential)
		Prefect Subjunctive (Second Evidential)

(Campbell, 2013, p.13)

If we draw the counterpart of Table 1 for Şavşat Georgian, the most remarkable difference will be the classification of future subseries. Unlike the standard dialect, future subseries aligns with the aorist series in Şavşat dialect. On the other hand, Şavşat dialect lacks complex conjugations such as perfect and subjunctive screeves, most probably because of the fact that it is a non-literary dialect mostly based on daily conversations. Table 2 summarizes the verb paradigm of Şavşat Georgian based on most frequent structures:

Table 2. Şavşat Georgian Verb Paradigm

Series	**Subseries**	**Screeve**
Present	Present	Present (Present Simple)
		Present Imperfect (Present Continuous)
		Past Imperfect (Past Continuous)
Aorist	Aorist	Aorist (Simple Past)
		Optative
	Future	Future Simple
Perfect		Pluperfect (Evidential Past)

As Georgian displays a complex case marking pattern which is sensitive to verb classes and screeves, we need another summary table to see how these features interact. For practical reasons, we will use more familiar terms based on argument structure of the verb since these terms correspond to verb classes in Şavşat Georgian to a large extent. To be more explicit, we will call Class 1 verbs as transitives, Class 2 verbs as unaccusatives, Class 3 verbs as unergatives and Class 4 verbs as statives in Table 3:

Table 3. Şavşat Georgian Verb Class-Case-Screeve Paradigm

		Transitive	Unaccusative	Unergative	Stative
Present	Subject	Nom	Nom	Nom	Dat
Series	Object	Dat	-	Dat	Nom
Aorist Series	Subject	Erg	Nom	Erg	Erg
	Object	Nom	-	Nom	Nom
Perfect	Subject	Dat	Nom	Dat	-
Series	Object	Nom	-	Nom	-

In the present series, the subject of the verb is marked with nominative case, while the object is marked with dative in each verb type as in (3) except for statives.

(3) a. Ahmet-ay saxl a-şen-eb-s.
Ahmet-Nom house.Dat PV-build-TS-Present.3sg
Ahmet is building the house.

b. Zap-i ts'qd-eb-a.
rope-Nom break-TS-Present.3sg
The rope is breaking.

c. Ahmet-ay laparak-ob-s.
Ahmet-Nom talk-TS-Present.3sg
Ahmet is talking.

Stative verbs mark their subjects with dative, while they mark their objects with nominative in the present series as shown in (4):

(4) Ahmet-as Sevim-ay u-qvar-s.
Ahmet-Dat Sevim-Nom VV-love-Present.3sg
Ahmet loves Sevim.

In the aorist series, the subject of the verb is marked with ergative case while the object is marked with nominative as in (5) except for unaccusatives.

(5) a. Ahmet-ama saxl-i a-a-şen-a.
Ahmet-Erg house.Nom PV-VV-build-Past.3sg
Ahmet built the house.

b. Ahmet-ama i-laparak-a.
Ahmet-Nom RMP-talk-Past.3sg
Ahmet talked.

c. Ahmet-ama Sevim-ay şu-u-qvar-d-a.
Ahmet-Dat Sevim-Nom PV-VV-love-INCH-Past.3sg
Ahmet loved Sevim.

The only argument of unaccusative verbs is marked with nominative case in the aorist series as shown in (6):

(6) Zap-i ga-ts’qd-a.

rope-Nom PV-break-Past.3sg

The rope broke.

In the perfective series, the subject of transitives and unergatives is marked with dative case while the object is marked with nominative as in (7):

(7) a. Ahmet-as saxl-i u-u-şen-i-a.

Ahmet-Dat house.Nom PV-VV-build-?-Past.3sg

Ahmet had built the house.

b. Ahmet-as u-laparak-i-a.

Ahmet-Dat VV-talk-?-Past.3sg

Ahmet had talked.

The only argument of unaccusative verbs is marked with nominative case in the perfective series like present and aorist series as shown in (8):

(8) Zap-i ga-ts’qd-il-i-a.

rope-Nom PV-break-NL-?-Past.3sg

The rope broke.

As shown in Table 3, stative verbs are not conjugated in the perfective series.

1.3.2.2.1 Verbal morphology

As other Caucasian languages, Georgian exhibits a very rich verbal morphology. There are various analyses for slot chart of Georgian verbs ranging from twelve to twenty-five slots. Differentiated charts can also be found in the literature based on the verb classes. A simplified version of verbal slots chart which includes eleven slots is provided here to avoid unrelated details:

Table 4. The Verbal Affixal System of Standard Georgian

Slot Number	**Function of Constituent**
1	Preverb(s)
2	Pronominal Agreement Prefix
3	Version Vowel
4	Root
5	Causative Suffix(es)
6	Inceptive/Passive Marker
7	Thematic Suffix
8	Perfect/Stative Marker
9	Imperfect Marker
10	Mood Vowel
11	Pronominal Agreement Suffix(es)

(Hewitt, 1995, p. 117)

Agreement

As a language which shows polypersonal agreement, Georgian verbs can express person and number information regarding the subject and the object via agreement morphology. Both prefixal and suffixal domains host agreement markers to encode arguments.

Table 5. Subject Agreement Markers

	Singular		Plural	
	Prefix	Suffix	Prefix	Suffix
1st person	v-		v-	-t
2nd person	Ø/(-x)		Ø/(-x)	-t
3rd person		-s/a/o		-(a/e)n/-es/-nen

(Hewitt, 1996, p. 42)

Table 6. Object Agreement Markers

	Singular		Plural	
	Prefix	Suffix	Prefix	Suffix
1st person	m-		gv-	
2nd person	g-		g-	-t
3rd person	Ø/(s-/h-)			Ø/(-t)

(Hewitt, 1996, p. 42)

To see how these affixes interact with each other, let us look at the complete conjugation template of *tser* (write) in the present screeve in Table 7. It is important to note that when the object enters the system, prefixal domain is mostly allocated to the object agreement markers while the suffixal domain hosts subject agreement markers.

Table 7. Conjugation Template of the Verb Tser (Write) in Present Series

tser (write)		Object					
		1st Sg	2nd Sg	3rd Sg	1st Pl	2nd Pl	3rd Pl
Subject	1st Sg	-	g-tser	v-tser	-	g-tser-t	v-tser
	2nd Sg	m-tser	-	tser	g-v-tser	-	tser
	3rd Sg	m-tser-s	g-tser-s	tser-s	g-v-tser-s	g-tser-t	tser-s
	1st Pl	-	g-tser-t	v-tser-t	-	g-tser-t	v-tser-t
	2nd Pl	m-tser-t	-	tser-t	g-v-tser-t	-	tser-t
	3rd Pl	m-tser-en	g-tser-en	tser-en	g-v-tser-en	g-tser-en	tser-en

(Makharoblidze, 2012, p. 123)

1.3.2.2.2 Syntax

As discussed in the literature, Georgian is a split ergative language which is aspectually conditioned (Lyle, 1997, p. 6). In accordance with the standard dialect, Şavşat Georgian displays ergative-absolutive alignment in perfective aorist Series II while they show nominative-accusative alignment in present Series I as summarized in Table 3. In the following lines, we will observe this split in detail.

In the present series, the subject of transitive verbs takes nominative case while the direct and the indirect objects are marked with dative case as shown in (9) below. The transitive subject is marked with ergative while the direct object takes nominative and the indirect object takes dative in the aorist series which includes both the aorist and the future screeves in Şavşat dialect as shown in (10) and (11) respectively:

(9)	K'ats-i	Bilal-as	saxl	a-shen-eb-s.
	man-Nom	Bilal-Dat	house.Dat	PV-build-TS-Present.3sg
	The man is building the house to Bilal.			

(10)	K'ats-ma	Bilal-as	saxl-i	a-a-shen-a.
	man-Erg	Bilal-Dat	house-Nom	PV-VV-build-Past.3sg
	The man built the house to Bilal.			

(11)	K'ats-ma	Bilal-as	saxl-i	a-a-shen-o-na-s.
	man-Erg	Bilal-Dat	house-Nom	PV-VV-build-?-?-3sg
	The man will build the house to Bilal.			

It is remarkable that Şavşat Georgian marks the direct object and the indirect object differently. The null realisation of dative case appears only in direct objects whereas *-(a)s* marker appears in indirect objects as exemplified in (9) above. This distinction may arise from the fact that all Şavşat Georgian speakers are Georgian-Turkish bilinguals and Turkish marks direct and indirect objects diversely. Example (12)

shows that this distinction does not occur in Standard Georgian, both direct and indirect object are marked with the same dative marker *-s*:

(12) Kal-i deda-s surat-s u-khat'-av-s.
woman-Erg mother-Dat picture-Dat VV-paint-TS-Present.3sg
The woman paints a picture for (her) mother.
(Makharoblidze, 2012, p. 15)

However, aspect based split is not the only split Georgian language shows. In the aorist series, intransitive verbs behave differently. Subjects of unergative verbs appear with ergative case as in (13) and (14) while subjects of unaccusatives display nominative case marking as in (15) and (16):

(13) Gharç-ma i-boch-a.
child-Erg RMP-crawl-Past.3sg
The child crawled.

(14) Gharç-ma i-boch-o-na-s.
child-Erg RMP-crawl-?-?-3sg
The child will crawl.

(15) Zap-i ga-ts'qd-a.
rope-Nom break-Past.3sg
The rope broke.

(16) Zap-i ga-ts’qd-e-na-s.

rope-Nom PV-break-?-?-3sg

The rope will break.

As ergative marking is only possible in the aorist series, both unergative and unaccusative subjects are marked with nominative case in the present series as shown in (17) and (18) respectively:

(17) Gharç-i boch-av-s.

child-Nom crawl-TS-Present.3sg

The child is crawling.

(18) Zap-i ts’qd-eb-a.

rope-Nom break-TS-Present.3sg

The rope is breaking.

At this point, it is important to emphasize that arguments are marked with the same case-marking pattern in present and future screeves as in (19) since both of them belong to the imperfective present series in Standard Georgian. Thus, they differ from the perfective aorist screeve as shown in (20):

(19) a. Kal-i deda-s surat-s u-khat’-av-s.

woman-Nom mother-Dat picture-Dat VV-paint-TS-3sg

The woman paints a picture for (her) mother.

b. Kal-i deda-s surat-s da-khat’-av-s.

woman-Nom mother-Dat picture-Dat PV-paint-TS-3sg

The woman will paint a picture for (her) mother.

(Makharoblidze, 2012)

(20) Kal-ma deda-s surat-i da-u-khat’-a.

man-Erg Bilal-Dat house-Nom PV-VV-paint-3sg

The woman painted a picture for (her) mother.

(Makharoblidze, 2012)

Nevertheless, it is a well-known fact that Georgian future is perfective semantically (Aranson, 1990). Aranson even states that the aorist forms are almost always derived from the future stem (Aranson, 1990, p. 112). So we can claim that there is a form-meaning inconsistency in Standard Georgian for the future screeve since it has imperfective morphological structure while denotes perfective semantic.

Remarkably, Şavşat dialect is sensitive to the perfective characteristics of future and it marks the arguments of this conjugation accordingly. Transitive and unergative subjects are marked with ergative case as shown in examples (11) and (14) while unaccusative subjects and direct objects are marked with nominative as in examples (11) and (16).

Let us repeat these examples here to show the perfective feature of the future conjugation holistically:

(11) K’ats-ma Bilal-as saxl-i a-a-shen-o-na-s.

man-Erg Bilal-Dat house-Nom PV-VV-build-?-?-3sg

The man will build the house to Bilal.

(14) Gharç-ma i-boch-o-na-s.

child-Erg VR-crawl-?-?-3sg

The child will crawl.

(16) Zap-i ga-ts’qd-e-na-s.

rope-Nom PV-break-?-?-3sg

The rope will break.

1.4 Outline of the thesis

Chapter 2 introduces several important studies from Standard Georgian literature which describe the environments where different realisations of the Thematic Suffixes occur and discuss their function in the verbal system from different viewpoints. To briefly mention, one view claims that the Thematic Suffixes occur in assigned verbal slots to satisfy morphological well-formedness, so they are dummy elements which do not have any function. The other view relates the Thematic Suffixes to certain semantic attributes such as aspect.

Chapter 3 aims to provide a descriptive analysis of the Thematic Suffixes in Şavşat Georgian. In this section, different realisations of the Thematic Suffixes are

identified and their function is discussed in relation to two semantic features; namely Aspect and argument structure.

Chapter 4 aims to provide the syntactic structure of the Thematic Suffixes in Şavşat Georgian considering causatives since causative structures appear with the Thematic Suffixes with different realisation patterns.

Chapter 5 summarizes the discussion in the current thesis and concludes it together with suggestions for further studies.

CHAPTER 2

THEMATIC SUFFIXES IN THE LITERATURE

This chapter aims to introduce the early studies which discuss the place of the Thematic Suffixes in Standard Georgian Grammar. Throughout the literature, some studies mainly focus on the formal features of the Thematic Suffixes and describe the distribution of different realisations of these particles in detail. In other studies, the function of the Thematic Suffixes is also discussed beside its reflection in syntax. In the following lines, we will review both some milestones of Georgian grammar and relatively recent studies to develop an in-depth understanding of the Thematic Suffixes.

2.1 Introduction

In Georgian, verbal forms may consist of a relatively large number of constituent parts. Let us remember Georgian verbal slots presented in the previous chapter:

(21) Georgian verb

1 2 3 4 5

Preverb / Pronominal Agreement Prefix / Version vowel / Root / Causative Suffixes

6 7 8

Inceptive/Passive marker / Thematic Suffix / Perfect/Stative Marker /

9 10 11

Imperfect Marker / Mood Vowel / Pronominal Agreement Suffix

(Hewitt, 1995, p. 117)

Thematic Suffixes also called Present/Future Stem Formant or Series Marker are one of these constituents whose function is subject to active debate though they are associated with imperfective aspect traditionally (Flynn, 2017).

The environments where the Thematic Suffixes occur are varied in Standard Georgian. We will cover several studies one by one to explore the structures in which Thematic Suffixes occur. However, it is fair to claim that the literature agrees on almost all finite verbs take the Thematic Suffixes in morphologically imperfect tenses such as present, future and past imperfective as shown in (22) respectively.

Thematic Suffixes also occur in masdars and participles, which are non-finite structures exemplified in (23). It is important to add that the Thematic Suffixes do not occur in perfective aorist which follows ergative case alignment as in (24).

(22) a. Nino saxl-s a-shen-eb-s.

Nino-Nom house-Dat PV-build-TS-Present.3sg

Nino is building a house.

b. Nino saxl-s a-a-shen-eb-s.

Nino-Nom house-Dat PV-VV-build-TS-Present.3sg

Nino will build a house.

c. Nino saxl-s a-shen-eb-d-a.

Nino-Nom house-Dat PV-build-TS-Past-3sg

Nino was building a house.

(23) a. a-şen-eb-a Masdar

(the act of) building

b. m-şen-eb-eli Active Participle

a builder

c. a-şen-eb-ul-i Perfect Participle

a built thing

d. a-u-şen-eb-eli Privative Participle

an unbuilt thing

(Flinn, 2017, p. 3)

(24) Nino-m saxl-i a-a-shen-a.

Nino-Erg house-Nom PV-VV-build-Past.3sg

Nino built a house.

After this brief introduction, let us start to discover the literature on the Thematic Suffixes.

2.2 Aranson (1990)

In his grammar, Aronson uses the term Present/Future Stem Formant (P/FSF) for the Thematic Suffixes and restricts the occurrence of the Thematic Suffixes with non-past contexts as we can infer from the name itself.

Aranson states that all verbal forms have a root which may be followed by a Present/Future Stem Formant (P/FSF). He exemplifies five different realisations of the Thematic Suffixes without describing the environments they occur in:

(25) a. tser- (no P/FSF)
write

b. targmn-i- (P/FSF -i)
translate-TS

c. xed-av- (P/FSF -av)
see-TS

d. sv-am- (P/FSF -am)

drink-TS

e. a-k'et-eb- (P/FSF -eb)

PV-make-TS

f. a-tb-ob- (P/FSF -ob)

PV-warm-TS

(Aranson, 1990, p. 40)

2.3 Hewitt (1995)

Hewitt describes the Thematic Suffixes as "… the set of morphemes according to which the formation of the tense-mood-aspect- paradigms of language's transitive and intransitive verbs is sub-divided" (Hewitt, 1995, p. 118). In his book, Hewitt grounds the formation of screeves (certain tense-aspect-mood combinations typical to Georgian verb paradigm) on the Thematic Suffixes. In each screeve, he categorizes the verbs according to the Thematic Suffixes they take and studies their morphological features within these groups. To exemplify, "the 3rd person singular subject marker is -s, which changes to -en in the plural, except for verbs with the Thematic Suffix -i" (Hewitt, 1995, p. 218).

Hewitt offers a detailed list for different realisations of the Thematic Suffixes and the environments they occur in. As he denotes, the Thematic Suffixes occur in all screeves of Series I. The perfect of transitives is formed based on the present stem so

most of the transitives keep their Thematic Suffixes also in perfect screeves. The Thematic Suffixes are observed in masdars and participles (with a reduced form in some cases). Series III intransitives, which include indirect and stative verbs, also bear the Thematic Suffixes since they are formed based on past participles and masdars. Certain realisations of the Thematic Suffix even occur in Series II (Hewitt, 1995).

Hewitt emphasizes that the terms Present/Future Stem Formant and Series Marker are too restrictive for these morphemes if we consider the wider environment they occur in. Thus, he prefers to use the term Thematic Suffixes.

To explain the function of the Thematic Suffixes Hewitt refers to Aranson (1979). He states that for Series I verbs, the case configuration is nominative-accusative; nominative case marks the subject of both transitive and intransitive verbs while the direct and indirect objects are marked with dative case. In Series II, however, ergative-absolutive configuration arises; transitive subject is marked with ergative case while intransitive subject and direct object take nominative (absolutive) case. For indirect object, dative case is used in many finite verbs.

In this point, Hewitt draws attention to Aranson's explanation on common dative marking for direct objects in Series I and indirect objects in Series II. Aranson explains this uniformity with the idea that Series I direct objects were originally datively marked indirect objects of Series II. The story is as follows: Series II transitive verbs undergo anti-passive formation which deletes the direct object and promotes the ergative agent to an absolutive subject. This formation ends up with intransitive and imperfective forms which have nominative-marked subject and dative-marked indirect object. In time, these

forms evolved to existing Series I transitive screeves which have their own restructured tense and aspect features.

To conclude the story, the most important part should be added: Aranson states that the Thematic Suffixes are the markers of this anti-passive formation. Hewitt emphasizes that this claim is the answer of the question why ergatively aligned Series II verbs do not bear the Thematic Suffixes.

2.4 Lyle (1997)

In his dissertation, Lyle relates the Thematic Suffixes to lexical aspect. Following Holisky's (1981) detailed description, he groups Georgian verbs as transitives (Class 1), unaccusatives (Class 2), unergatives (Class 3) and statives/psych verbs (Class 4). Let us look at his description of verb types in Georgian.

Lyle states that Class 1 verbs are transitive in form and they denote achievement and accomplishment. Although these verbs may be used to denote both atelic and telic events, he claims that all Class 1 verbs inherently express telic events if we consider their lexical aspectual features.

Class 2 consists of unaccusative verbs which have either passive or reflexive meaning. Other available readings of these verbs are inchoative and inceptive as some unaccusative verbs are derived from a nominal or a corresponding activity verb. Different from the observed variety in Class 1, Lyle states that all Class 2 verbs take only the Thematic Suffix *-eb*. Similar to the transitive class, unaccusative class verbs denote achievements and accomplishments. Although these verbs may also show

previously observed telicity alternation, Lyle emphasized that the big majority of Class 2 verbs are telic.

Lyle states that Class 3 verbs are formally intransitive and almost all of them denote atelic activities. He underlines that unergative class verbs take the Thematic Suffix -*eb* in their future conjugation (with reflexive relative prefix *i*-) while various realisations of the Thematic Suffixes are observed in present.

Class 4 verbs can exemplify both transitive and intransitive structures but they are mostly psych verbs or express physical states. As they do not have preverbs in any case, Lyle underlines that these verbs are inherently imperfective.

As an overall evaluation, Lyle states that Georgian verbs take the Thematic Suffixes in present and future conjugations while the aorist series lacks them in each verb class. For Class 1 verbs, the Thematic Suffixes may vary in both present and future series while for other classes the Thematic Suffixes vary in present but the only alternative is -*eb* in future series.

After reconsidering the telicity and Aktionsart features of Georgian verb classes beside their morphological formation, Lyle concludes that we can relate the Thematic Suffixes with a process/atelic interpretation of an event. This is the reason why the Thematic Suffixes can occur both in present and past imperfective contexts. Nevertheless, it is worth noting that preverb may take scope over the Thematic Suffixes and assign a telic reading.

To account for the syntactic features of the Thematic Suffixes, Lyle conflates three analyses: First, the Thematic Suffixes are an instance of the light verb which

occurs only in accusative clauses (Nash, 1995). Second, the light verb occurs in every clause and it has the function to identify the event type (Harley, 1995). Third, there are four light verb types which correspond to the three semantic primitives of Dowty (1979) and one extra related with states. These are CAUSE, BECOME, DO and BE.

Lyle argues that the Thematic Suffixes are the realisation of the light verb phrase. The light verb is differentiated according to the argument structure and case assignment. If we set the argument structure as a benchmark, there happen to be four alternatives. First, the light verb takes an external argument. Second, the light verb does not take an external argument. Third, the light verb selects an internal temporal argument when the verb denotes a transition and fourth the verb does not select an internal argument. These alternatives result in four possible combinations of features. Lyle matches these features with four light verb types as shown in (26):

(26) a. CAUSE [+external argument, +temporal argument]

b. BECOME [-external argument, +temporal argument]

c. DO [+external argument, -temporal argument]

d. BE [-external argument, -temporal argument]

(Lyle, 1997, p. 130)

According to Dowty's aspect calculus, CAUSE and DO light verbs are agentive and so they employ an external argument. Besides, CAUSE and BECOME denote transitions thus they take internal arguments.

Based on case assignment, the light verb may assign case or not. Lyle states that " . . . only the light verbs instantiating CAUSE or DO can be case assigners. Thus these light verbs are true Burzio's morphemes, assigning structural case and licensing an external argument." (Lyle, 1997, p. 131). As Lyle underlines this situation is line with Nash's (1995) idea that external argument is generated as the specifier of light verb which both licences external argument and assigns accusative case in accusative languages while in ergative languages external argument is generated VP internally where it is assigned ergative case lexically. Thus, Nash claims that the Thematic Suffix is the realisation of v which exists in accusative clauses but lacks in ergative clauses as shown in (27) and (28):

(27) Accusative Clause

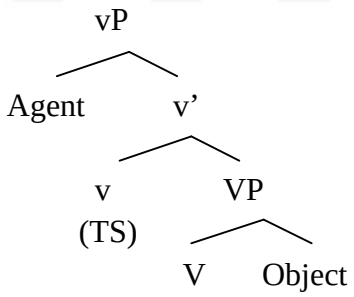

(28) Ergative Clause

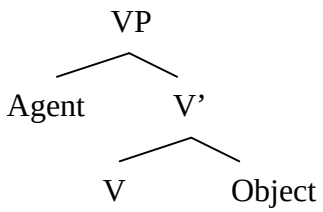

As (28) shows Nash claims “the projection headed by the Thematic Suffix is simply absent in the aorist series.”

Lyle agrees that the Thematic Suffix is the realisation of light verb. However, unlike Nash he suggests that the light verb projection headed by the Thematic Suffix is not absent but morphologically null in ergative clauses: “In imperfective tenses, the event head assigns accusative case and is realized as the Thematic Suffix. In the aspectually perfective aorist, the event head assigns ergative to its specifier and is realized as ø.” (Lyle, 1997, p. 132).

However, we know that the Thematic Suffixes also occur in aspectually perfective future tense. At this point, Lyle suggests that the Thematic Suffixes occur if the activity of the agent is [-past] with respect to the reference time, while ø occurs when the activity of the agent is [+past] with respect to the reference time.

As Lyle also agrees that the light verb is differentiated based on argument structure, he suggests four types of syntax tree for each light verb type:

(29) Light verb DO: activities

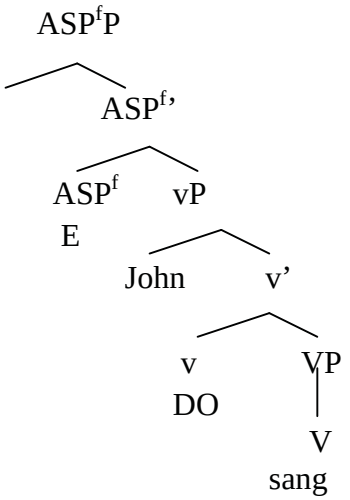

John sang.

(Lyle, 1997, p. 140)

(30) Light verb CAUSE: transitive transitions

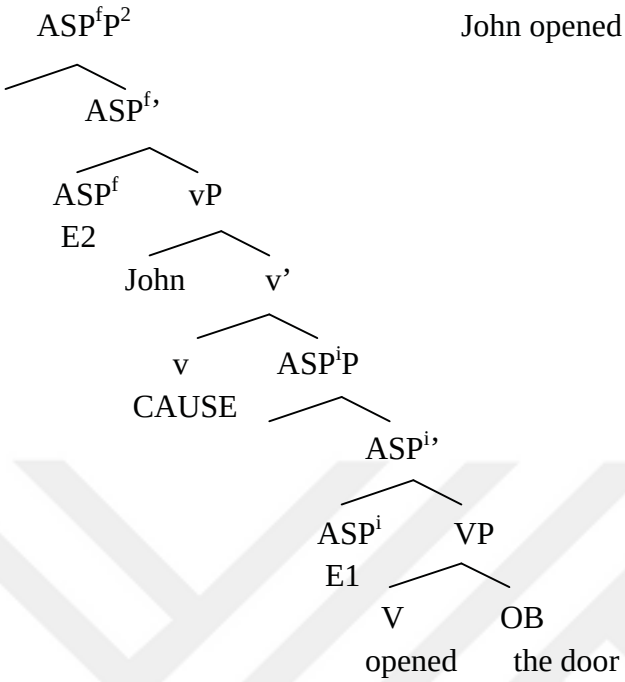

John opened the door.

(Lyle, 1997, p. 139)

(31) Light verb BE: states

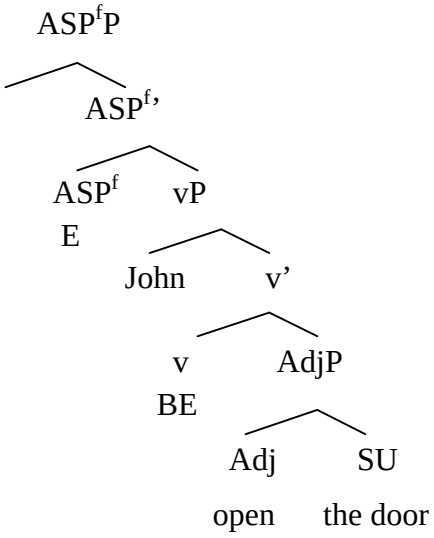

The door is open.

(Lyle, 1997, p. 141)

[2] Lyle suggests that the two temporal roles associated with transitions are mapped to $ASP^{F}P$ (final aspect) and $ASP^{i}P$ (inner/initial aspect). "The lower aspect phrase is associated with the initial temporal role, and the higher aspect phrase with the final temporal role, i.e. the culmination of the event." (Lyle, 1997, p. 138)

(32) Light verb BECOME: intransitive transitions

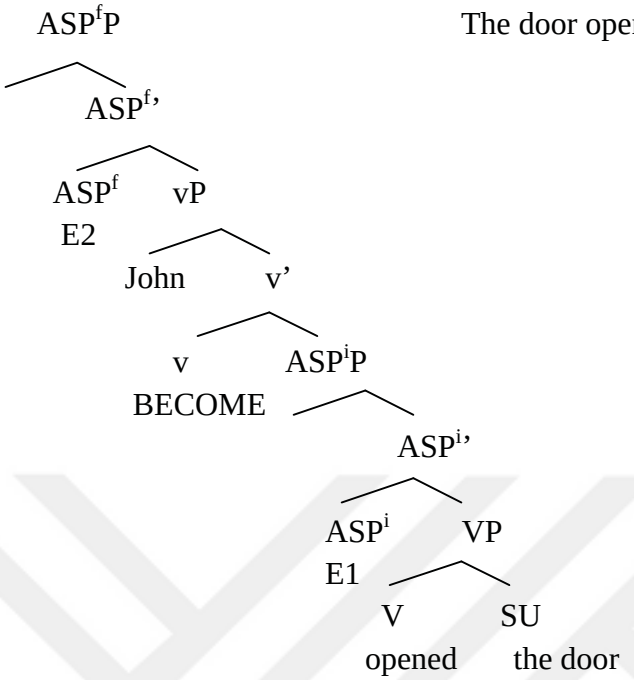

The door opened.

(Lyle, 1997, p. 140)

2.5 Nash (2017)

In this study, Nash signifies Thematic Suffixes as the marker of imperfectivity which shows up with transitive, unergative and unaccusative verbs in nominative tenses. Nash states that all unaccusative verbs take the Thematic Suffix -*eb* while unergative and transitive verbs appear with -*av*, -*eb*, -*i*, -*ob* or ø.

As a rough semantic classification, Nash puts forward that creation/destruction/ reconfiguration transitive verbs -manner verbs- take the Thematic Suffix -*av* while deadjectival causatives -result verbs- appear with the Thematic Suffix -*eb*. In the unergative class, sound and noise emission verbs take -*eb*, manner of motion verbs take the suffix -*av* and manner of behavior verbs take -*ob*. Masdars also appear with corresponding Thematic Suffix followed by the nominaliser -*a*.

(33) Transitive

a. draw	xat-**av**-s	drawing	xat-**av**-a
b. sow	tes-**av**-s	sowing	tes-**av**-a
c. frighten	(a)şin-**eb**-s	frightening	şin-**eb**-a
d. whiten	(a)tetr-**eb**-s	whitening	tetr-**eb**-a

Unergative

e. reign (act+king)	mep-**ob**-s	reigning	mep-**ob**-a
f. act+nervous	nerviul-**ob**-s	acting nervous	nerviul-**ob**-a
g. roll	gor-**av**-s	rolling	gor-**av**-a
h. swim	tsur-**av**-s	swimming	tsur-**av**-a

(Nash, 2017, p. 18)

Nash puts emphasis on that the Thematic Suffix never appears in stative verbs and in the aorist -or in the future- if the verb intends to get terminated.

After this classification, Nash suggests that the Thematic Suffix is the marker of imperfective aspect as it is incompatible with non-imperfective tenses.

2.6 Nash (2018)

In this work, Nash investigates the unergative verbs in Georgian by dividing them into groups based on their Thematic Suffixes. As a general feature, Georgian eventive verbs

take Thematic Suffixes in morphologically imperfective tenses. TS denote imperfective aspect and give information about Aktionsart of the related predicate (Nash, 2018).

Before dealing with the unergative class, Nash underlines three basics of Georgian Thematic Suffixes in general. First, the Thematic Suffixes occur in masdars. Second, the Thematic Suffixes never occur in screeves which display ergative-absolutive case alignment. Third, the Thematic Suffixes never occur in stative verbs. Although there are other realisations of the Thematic Suffix, the most frequently used ones are *-eb*, *-av*, *-ob* and ø respectively.

Nash clarifies the verbal categories in which different realisations of the Thematic Suffixes occur as follows: All unaccusative verbs take the Thematic Suffix *-eb* while transitive eventive verbs mostly take *-eb*, *-av* and ø. The suffix *-eb* marks causative and inchoative change of state verbs while *-av* and zero realisation are observed in verbs which denote creation or which express manner of manufacturing and transformation.

To continue with the main focus of the paper, Nash claims that unergative verbs can be examined in four main groups as *-ob* unergatives, *-eb* unergatives, *-av* unergatives and irregular unergatives.

-ob unergatives consist of verbs which are formed from nominal or adjectival roots. Thus, they denote denominal and deadjectival behaviors as in (34):

(34)	a. muşa	b. muşa-**ob**-s
	worker	S/he acts as a worker.

c. katsi d. kats-**ob**-s

man S/he acts/behaves as a man.

e. nazi f. naz-**ob**-s

gentle S/he behaves as a graceful person.

(Nash, 2018, p. 6)

The second subgroup of unergatives, -*eb* unergatives, is formed from process-denoting stems and they mostly denote light emission, sound imitation or manner of motion. As Nash states, these verbs can be perceived to consist of mini-events which involve a repetitive flow of energy.

Morphologically, this class can be divided into two subcategories: Verbs which have onomatopoeic reduplicated roots as in (35) and verbs which have nominalized onomatopoeic roots as in (36):

(35) Roots with reduplicated onomatopoeia

a. xit-xit-eb-s

root-root-TS-Present.3sg

S/he is chuckling/giggling.

b. giz-giz-eb-s

root-root-TS-Present.3sg

It is blazing.

c. pam-pal-eb-s

root-root-TS-Present.3sg

S/he is wobbling.

(36) Roots with nominalized onomatopoeia

a. br-ial-eb-s

root-NL-TS-Present.3sg

It is sparkling.

b. xram-un-eb-s

root-NL-TS-Present.3sg

It is crunching.

c. buzgh-un-eb-s

root-Nom-TS-Present.3sg

S/he is moaning.

(Nash, 2018, p. 7)

Nash emphasizes that -*eb* unergatives do not have corresponding masdar forms as their roots are already nominalisation of onomatopoeia.

The third category, -*av* unergatives express manner of motion as in (37):

(37) a. popx-av-s

crawl-TS-Present.3sg

S/he is crawling.

b. tsur-av-s

swim-TS-Present.3sg

S/he is swimming.

c. gor-av-s

roll-TS-Present.3sg

It is rolling.

(Nash, 2018, p. 8)

Nash's last category is irregular unergatives. These unergatives do not appear with any realisation of the Thematic Suffixes and they denote manner of non-verbal expression or movement as shown in (38):

(38) a. tir-i-s

cry-?-Present.3sg

S/he is swimming.

b. bghav-i-s

roar-?-Present.3sg

It is roaring.

c. mgher(i)-s

sing-?-Present.3sg

S/he is singing.

d. da-rb-i-s

PV-run-?-Present.3sg

S/he is running.

e. tov-s

snow-Present.3sg

It is snowing.

f. tsvim-s

rain-Present.3sg

It is raining.

g. kux-s

thunder-Present.3sg

It is thundering.

(Nash, 2018, p. 9)

It is noteworthy that a subclass of these roots is followed by -*i*-morpheme which cannot be a realisation of a Thematic Suffix according to Nash. She supports this claim suggesting that this morpheme shifts to -*o*- in past perfective conjugation which is not the case for any other Thematic Suffix as shown in (39):

(39)	Present	Past Imperfective
	a. tir-i-s cry-?-Present.3sg S/he is crying.	b. tir-o-d-a cry-?-INCH-3sg She was crying.
	c. mgher-i-s sing-?-Present.3sg S/he is singing.	d. mgher-o-d-a sing-?-INCH-3sg She was singing.
	e. kana-ob-s swing-TS-Present.3sg S/he is swinging.	f. kana-ob-d-a swing-TS-INCH-3sg She was swinging.
	g. gizgiz-eb-s blaze-TS-Present.3sg It is blazing.	h. gizgiz-eb-d-a blaze-TS-INCH-3sg It was blazing.

i. gor-av-s	j. gor-av-d-a
roll-TS-Present.3sg	roll-TS-INCH-3sg
It is rolling.	It was rolling.

(Nash, 2018, p. 9)

Nash also suggests that -*i*- morpheme does not occur in nominalisation although other alternations of the Thematic Suffixes do. Actually, these verbs do not have regular masdar forms because they lack the Thematic Suffixes. Instead, related lexical nouns are used to denote process in nominal contexts as shown in (40):

(40)	a. tir-i-s	b. tir-il-i	c. *tir-i-a
	cry-?-Present.3sg	cry-NL-?	cry-?-?
	S/he is crying.	crying	

d. mgher-i-a	e. mgher-a	f. *mgher-i-a
sing-?-Present.3sg	sing-?	sing-?-?
S/he is singing.	singing	

Nash emphasizes that body substance and sound emission verbs are not classified as unergatives in Georgian although they are intransitive and agentive. The reason why

Nash does not classify these verbs as unergative is that they do not take the Version Vowel -*i*- in perfective tenses. She indicates that these verbs can be interpreted as transitive accomplishment verbs with the silent theme argument.

As the last remark, Nash draws the attention to the instability of the Thematic Suffix occurrence in stative verbs. As she demonstrates, Georgian statives do not take the Thematic Suffixes in the present tense while they appear with the Thematic Suffix -*eb* in future forms as shown in (41):

(41)	Present	Future
	a. mas u-qvar-s	b. mas e-qvar-eb-a
	She loves him.	She will love him.

Nash suggests that stative verbs behave as unaccusatives in future conjugation. The presence of Version Vowel -*e*- proves this claims as Version Vowel -*e*- can only occur in unaccusatives.

A similar case can be observed in -*ob* unergatives. The Thematic Suffix -*ob* shifts to the Thematic Suffix -*eb* in perfective future forms. The difference in this shift is that -*ob* unergatives do not get unaccusative feature since the verbs take transitive agreement marker -*s* instead of non-active subject agreement marker -*a*.

(42) Stative to unaccusative

a. xalx-i	sxed-s	b. xalx-i	i-sxd-**eb**-a
People are sitting.		People will sit.	

(43) Unergative to transitive

a. gigo	xulign-**ob**-s	b. gigo	i-xulign-**eb**-s
Gigo is acting as a hooligan.		Gigo will act as hooligan.	

For the syntactic reflection of the Thematic Suffixes, we need to call Nash's principal claim: Georgian unergatives are underlyingly states. These verbs display different syntactic structures in perfective and imperfective tenses since they get agentive semantics via different mechanisms which vary based on grammatical aspect.

In imperfective tenses, the language employs a hybrid Aspect/Voice category to enable the external argument to get the Agent role. The Aspect category enables the Thematic Suffix to get realised in the structure as shown in (44):

(44)

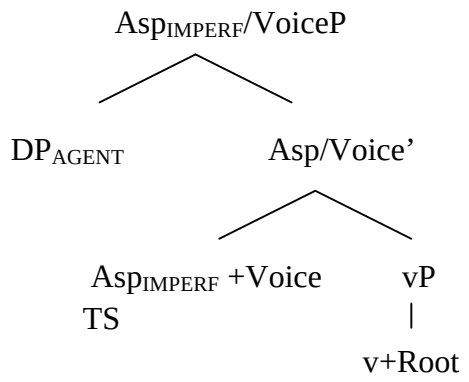

(Nash, 2018, p. 24)

In perfective tenses, agentivity of unergative verbs is construed within the verbal domain via causativisation of stative VoiceP. The Thematic Suffix does not emerge in this structure as the language does not initiate Aspect category in perfective tenses which manifest ergative case alignment as shown in (45):

(45)

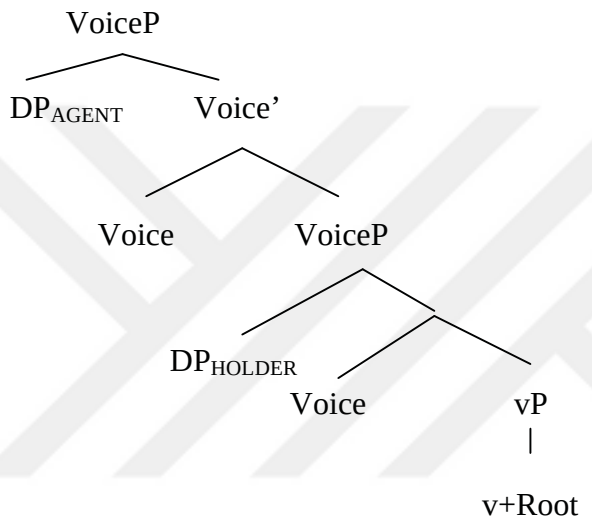

(Nash, 2018, p. 24)

2.7 Lomashvili (2010)

In her dissertation, Lomashvili touches upon the issue of the Thematic Suffixes to investigate their possible relation with causativity.

Lomashvili claims that thematic markers, namely the Thematic Suffixes in Georgian case- are morphological well-formedness affixes which are not associated with any specific terminal node in the syntax. She refers to Halle & Embick (2003) to support the idea that thematic markers are dummy elements and they do not realize any particular functional head.

Lomashvili also asserts that the verbs class determines which Thematic Suffix will attach to a certain verb. “There is no principled reason why certain verbs show up with either of these markers, since Thematic Suffixes are the formants inserted for morphological well-formedness.” (Lomashvili, 2010, p. 75)

Although it is argued that the Thematic Suffix *-eb* indicates the presence of the causative morpheme in Aronson (1990), Lomashvili puts forward there is no consistent relation between the occurrence of causative marker *-in-* and the Thematic Suffix *-eb.*

2.8 Öztürk & Taylan (2017)

Öztürk and Taylan argues that in Pazar Laz – a closely related language to Georgian – both unergative and unaccusative verbs have the same syntactic structure with transitives which involve both a subject and an object position. They relate this pattern to the voice system of the language.

In their study, they touch upon the verbal classification of Pazar Laz and the role of the Thematic Suffixes on this classification. As Laz is a close relative to Georgian and Pazar Laz is spoken in close neighborhood of Şavşat Georgian, this study can provide insight on the characteristics of the Thematic Suffixes in Şavşat Georgian.

Pazar Laz has four different Thematic Suffixes which are *-am*, *-um*, *-e(r)* and *-u(r)* and each of these suffixes denote a different aspect of the event structure.

The Thematic Suffix *-am* occurs in unergatives which involve unbounded atelic activities shown in (46a) and verbs of emission shown in (46b). It also surfaces in

transitive verbs with unaffected objects denoting activity as in (46c) or accomplishment as in (46d):

(46) a. Bere-k i-bgar-am-s.

child-Erg val-cry-TS-Present.3sg

The child is crying/cries.

b. Ntsa-k gurgul-am-s.

sky-Erg clap-TS-Present.3sg

Thunder claps/is clapping.

c. Amedi-k t'abaxi çx-am-s.

Ahmet-Erg plate.Nom wash-TS-Present.3sg

Ahmet is washing/washes the plate.

d. Amedi-k dişka mo-ğ-am-s.

Ahmet-Erg wood.Nom PV-bring-TS-Present.3sg

Ahmet is bringing/brings wood.

(Öztürk & Taylan 2017, p. 7)

The second Thematic Suffix *-um* occurs with transitive verbs with affected objects as exemplified in (47). The verbs in this group also indicate activity or accomplishment.

(47) a. Ahmedi-k şee-pe nax-um-s.

Ahmet-Erg laundry-Pl.Nom wash-TS-Present.3sg

Ahmet is washing laundry.

b. Bere-k ham tzari ş-um-s.

child-Erg this water.Nom drink-TS-Present.3sg

The child is drinking this water.

(Öztürk & Taylan 2017, p. 8)

The Thematic Suffix *-u(r)* is used with unaccusative verbs which can denote achievement, degree achievement or directed motion as shown in (48):

(48) a. Balon-epe t'vats-u-n.

balloon-Pl.Nom pop-TS-Present.3sg

The balloons are popping.

b. Xava mts’up-u-n.

weather.Nom get.dark-TS-Present.3sg

It is getting dark.

c. Bere ey-ul-u-n.

child.Nom PV-climb-TS-Present.3sg

The child is climbing up.

(Öztürk & Taylan 2017, pp. 8-9)

The last Thematic Suffix *-e(r)* can occur with any verb which takes other Thematic Suffixes if the verbs have a conceptual agent.

Demonstrated throughout the examples above, Öztürk and Taylan states that the Thematic Suffixes reflect information on the lexical aspect and argument structure simultaneously beside it denotes imperfective aspect in Pazar Laz. To account for its status in syntax, they argue that the Thematic Suffixes head a projection on top of the vP layer introducing the initiator which they label as EventP. In this position, the Thematic Suffixes dominate the lexical predicate and all the arguments which enables them to represent different eventualities and reflect information regarding the argument structure and the lexical aspect of the verb as shown in (49):

(49)

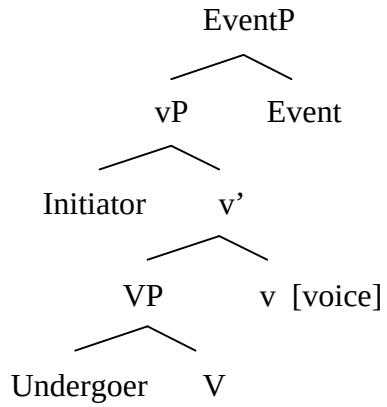

2.9 Summary

In this chapter, we have presented a survey of the literature on the Thematic Suffixes including earlier and recent studies based on mostly Standard Georgian. We can safely claim that the literature seems to agree on the relationship between the Thematic Suffixes and imperfective aspect. Furthermore, some studies also argue that Thematic Suffixes also denote information regarding lexical aspect and argument structure. In the light of these discussions, we will examine Şavşat Georgian in the following chapter to find out the dynamics between the Thematic Suffixes, aspect and argument structure in this understudied dialect.

CHAPTER 3

THEMATIC SUFFIXES IN ŞAVŞAT GEORGIAN

3.1 Introduction

As in Standard Georgian, the Thematic Suffixes have several realisations in Şavşat Georgian too, though, the most commonly observed ones are *-eb, -ob, -av* and *-ev*. Besides, there are a number of verbs which do not take any Thematic Suffix in any expected environment as summarized in Table 8:

Table 8. Thematic Suffixes in Şavşat Georgian

TS	Verbs	Masdar	Present Imperf.	Past Imperf.
eb	build	aşeneba	aşenebs	aşenebda
ob	think	dapikra	pikrobs	pikrobda
av	crawl	boçva	boçavs	boçavda
ev	throw	gaknevna	iknevs	iknevda
Ø	cry rain	tirili dats’vimeba	tiris ts’vims	tiroda ts’vimda

Let us see different realisations of the Thematic Suffixes in Şavşat Georgian throughout the examples in (50)-(55):

(50) K’ats-i saxl a-shen-eb-s.

man-Nom house-Dat PV-build-TS-Present.3sg

The man is building the house.

(51) Kal-i pikr-ob-s.

woman-Nom think-TS-Present.3sg

The woman is thinking.

(52) Gharç-i boch-av-s.

child-Nom crawl-TS-Present.3sg

The child is crawling.

(53) Gharç-i top i-kn-ev-s.

child-Nom ball.Dat PV-crawl-TS-Present.3sg

The child is throwing the ball.

(54) Gharç-i tir-i-s.

child-Nom cry-?-Present.3sg

The child is crying.

(55) Ts’vim-a ts’vim-s.

rain-Nom rain-Present.3sg

It is raining.

In this chapter, we will provide a descriptive analysis of the Thematic Suffixes in Şavşat dialect. Throughout the sections, the function of the different realisations of the Thematic Suffixes is discussed in relation to grammatical aspect, lexical aspect and argument structure in the light of evidences from the literature.

3.2 Thematic Suffixes and grammatical aspect

As a brief reminder, Thematic Suffixes occur in imperfective tenses such as present, past imperfective and future in Standard Georgian (Nash, 2018, p. 5) as exemplified in (56). Thus, they are referred to as markers of imperfective aspect of eventuality (Nash, 2017, p. 18). It is important to emphasize that imperfectivity is defined in terms of morphological structure in Standard Georgian. Although future tense has a perfective semantic, it is classified as imperfective since its morphological structure has an imperfective characteristic. Thus, in line with imperfective case and agreement morphology, Standard Georgian displays the Thematic Suffixes in future tense as shown in (56b) similar to other imperfective conjugations like present as in (56a) and past imperfective as in (56c):

(56) a. Nino saxl-s xat-av-s. SG[3]

Nino.Nom house-Dat draw-TS-3sg

Nino is drawing a car.

b. Nino saxl-s da-xat-av-s.

Nino.Nom house-Dat PV-draw-TS-3sg

Nino will draw a car.

[3] In order to avoid confusion, we will mark examples as either SG (Standard Georgian) or ŞAVŞAT (Şavşat Georgian).

c. Nino saxl-s xat-av-d-a.

Nino.nom house-Dat draw-TS-Past-3sg

Nino was drawing a car.

Although the verbal environments where Thematic Suffixes occur are slightly different in Şavşat Georgian, it is safe to claim that Thematic Suffixes mark imperfective aspect since they only occur in imperfective tenses such as present and past imperfective as shown in (57a), (57b) and (57c).

Unlike Standard Georgian, morphological structure and semantic feature go hand in hand in Şavşat Georgian regarding imperfectivity. If a certain conjugation displays imperfective morphological structure such as nominative-dative case alignment and the existence of the Thematic Suffixes, it also depicts imperfective semantic. Thus, we can put forward that the Thematic Suffixes are true markers of imperfectivity in Şavşat dialect.

(57) a. Ahmet-ay saxl a-şen-eb-s. ŞAVŞAT

Ahmet-Nom house.Dat PV-build-TS-Present.3sg

Ahmet is building a house.

b. Ahmet-ay saxl a-a-şen-eb-s.

Ahmet-Nom house.Dat PV-VV-build-TS-Present.3sg

Ahmet builds a house.

c. Ahmet-ay saxl a-şen-eb-d-a.

Ahmet-Nom house.Dat PV-build-TS-Past-3sg

Ahmet was building a house.

d. Ahmet-ama saxl-i a-a-şen-a.

Ahmet-Erg house-Nom PV-VV-build-Past.3sg

Ahmet built a house.

e. Ahmet-ama saxl-i a-a-şen-o-na-s. / a-a-şen-o-s-na.

Ahmet-Erg house-Nom PV-VV-build-?-Future-3sg

Ahmet will build a house.

As shown in (57e) the Thematic Suffixes do not occur in future tense in Şavşat Georgian unlike what is observed in Standard Georgian. Such a structure, that is the use of the Thematic Suffixes in future tense, yields causative meaning in Şavşat dialect as shown in (58):

(58) a-şen-eb-i-o-na-s. ŞAVŞAT

PV-build-TS-CS-?-Future-3sg

S/he will make him/her build a house.

We can thus recap that future conjugation is truly perfective in Şavşat Georgian as it displays ergative-absolutive case alignment and lacks the Thematic Suffixes.

3.3 Thematic Suffixes and lexical aspect

In this section, we will look at the relation between Thematic Suffixes and lexical aspect in Şavşat Georgian.

Lexical aspect is a semantic category that concerns properties of eventualities expressed by the verb. In the most general terms, the properties in question have to do with the presence of some end, limit or boundary in the lexical structure of certain classes of verbs and its lack in others (Filip, 2012, p. 721). The most well-known lexical aspect classes are Vendler's (1967) Accomplishment, Achievement, Activity and State. Nash (2017) claims that beside grammatical imperfective aspect, the Thematic Suffixes interact with lexical aspect and each Thematic Suffix can roughly be tied to a semantic class. In the following lines, we will discuss different realizations of the Thematic Suffixes in Şavşat dialect setting Nash's rough classification as a benchmark.

3.3.1 Unergatives

In traditional Georgian grammar, unergatives are called as medial verbs. Hewitt (1996) describes medial class as "… a class of verbs which may take a variety of forms in the present sub-series but which in almost all cases take a single formation in the future sub-series and Series II." In other words, medial verbs may either appear as root verb or appear with different realisations of the Thematic Suffixes in the present subseries while they only occur with prefix *i-* and the Thematic Suffix *-eb* in the future subseries.

Hewitt states that medial verbs express movement and sound beside weather conditions. Behavior related denominals which convey *work as*, *behave as* meanings

also belong to medial class. In addition to these categories, Hewitt offers some other verbs to exemplify medial class such as *live, think, answer, talk, play, study* and *work.*

In her comprehensive study on Georgian unergatives, Nash (2018) follows Hewitt's footsteps and states that Georgian unergatives form a natural class as they all carry Reflexive-Medio-Passive morpheme *i-* beside they are marked with ergative case in perfective tenses.

As mentioned in the Chapter 2, Nash divides unergatives into four subclasses which are *-ob* unergatives, *-eb* unergatives, *-av* unergatives and irregular unergatives. These classes roughly coincide with Hewitt's semantic categories. In the following lines, we will discover these unergative classes in Şavşat Georgian.

Nash's first category is *-ob* unergatives and it includes behavior-related denominal and deadjectival verbs. Şavşat dialect is in line with this classification as denominal/deadjectival behaviour verbs appear with the Thematic Suffix *-ob* as shown in (59)-(61):

(59)	a. nazli	b. nazl-ob-s	ŞAVŞAT
		delicate-TS-Present.3sg	
	delicate	S/he is behaving as a delicate person.	

(60)	a. kali	b. kal-ob-s
		woman-TS-Present.3sg
	woman	S/he is behaving as a woman.

(61) a. k'atsi b. k'ats-ob-s

man-TS-Present.3sg

man S/he is behaving as a man.

Nash's *-eb* unergatives include light emission verbs such as *sparkle*, sound imitation or non-verbal expression[4] verbs such as *crunch* and manner of motion verbs such as *crawl*.

Let us look at these subclasses in Şavşat dialect in examples (62)-(67):

Light emission verbs:

(62) pkriyal-ob-s ŞAVŞAT

shine-TS-Present.3sg

It is shining.

(63) natel-ob-s

light-TS-Present.3sg

It is lighting.

Sound imitation/Non-verbal expression verbs:

(64) shxriyal-ob-s ŞAVŞAT

purl-TS-Present.3sg

It is purling.

[4] Nash defines onomatopoeic roots which do not have any lexical meaning as non-verbal expressions. She uses this phrase also for sound emission verbs like *cry, roar* and *scream*. We will keep her labelling in the current study to maintain the coherence.

(65) chikchik-ob-s

warble-TS-Present.3sg

It is warbling.

(66) tirtil-ob-s

grumble-TS-Present.3sg

S/he is grumbling.

Manner of motion verbs:

(67) qanqal-ob-s ŞAVŞAT

shiver-TS-Present.3sg

S/he is shivering.[5]

Examples in (62)-(67) show that Şavşat Georgian does not follow the -*eb* pattern in light emission verbs, sound imitation verbs and manner of motion verbs. Instead, most of the verbs belong to these categories take the -*ob* suffix like denominal unergatives.

In this point, I want to look at some unergative verbs from Hewitt's examples which include both agentive and stative verbs to see how they behave in Şavşat Georgian throughout the examples in (68)-(73):

[5]It is worth noting that such verbs have true masdar forms which occur with the Thematic Suffix -*eb* as in *qapkriyaleba* (shining), *ganatleba* (lighting), *dashxriyaleba* (purling) and *qanqaleb* (shivering) contrary to Standard Georgian. Şavşat dialect does not categorize these verb forms as nominalisations of eventive verbs contrary to Nash's categorization.

(68) tsotsxl-ob-s ŞAVŞAT

live-TS-Present.3sg

S/he is living.

(69) pikr-ob-s

think-TS-Present.3sg

S/he is thinking.

(70) sam-ob-s

dance-TS-Present.3sg

S/he is dancing/playing.

(71) kitxvl-ob-s

study-TS-Present.3sg

S/he is studying/reading.

(72) sakm-ob-s

work-TS-Present.3sg

S/he is working.

(73) laparak-ob-s

talk-TS-Present.3sg

S/he is talking.

Examples in (68)-(73) are in line with previously mentioned unergatives in terms of occurring with the Thematic Suffix *-ob*.

Let us look at stative and psych verbs in Şavşat dialect in (74):

(74) a. xdomil-ob-s ŞAVŞAT

feel-TS-Present.3sg

S/he is feeling/feels.

b. pişmn-ob-s

regret-TS-Present.3sg

S/he is feeling/feels regret.

c. sahab-ob-s

have-TS-Present.3sg

S/he has.

Statives in (74) also follow the *-ob* pattern that we have encountered in all subtypes of unergatives until this point. This regularity on the Thematic Suffix *-ob* among different subtypes of unergative can be linked to a certain aspectual class namely the statives.

In her study, to account for their structural inconsistency across different aspects, Nash (2018) claims that Georgian unergatives are headed by an underlyingly monovalent stative verb, with an external Holder argument. Although these verbs are

agentivised in imperfective tenses since inherently dynamic progressive Aspect category fuses with the unergative predicate, they are stative in core.

This is in line with Hale and Keyser (2002), who argue that a large number of unergative verbs in English are actually denominal. For example, *dance* is both a noun and a verb. To account for their syntactic structure, Hale and Keyser propose the monadic structure in (75), where *dance* starts as a noun and then conflates into the light verbal head to form the unergative verb *dance*. They argue that this structure applies to the whole unergative class.

(75)

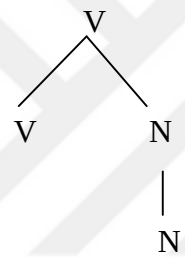

We can thus claim that Şavşat Georgian marks stative aspect with the Thematic Suffix *-ob* as all subtypes of the unergative class, namely, denominal behavior verbs, light, sound and motion emission verbs, occur with the *-ob* suffix in accordance with stative verbs.

However, we still need to account for Nash's third unergative class which diverges from the *-ob* pattern in Şavşat dialect. These unergatives denote movement and they take the Thematic Suffix *-av* in the standard dialect. It looks like that Şavşat Georgian follows this pattern, as well, as shown in (76):

Manner of movement verbs:

(76) a. boç-av-s ŞAVŞAT

crawl-TS-Present.3sg

S/he/it is crawling.

b. tsur-av-s

swim-TS-Present.3sg

S/he/it is swimming.

c. gor-av-s

roll-TS-Present.3sg

S/he/it is rolling.

Although *-av* unergatives denote undirected motion, Nash emphasizes that they can imply cumulativity as they can occur with directional perfectivising preverbs in perfective tenses. When directional information is added, the verb loses its atelic activity interpretation and gets a meaning closer to transitive accomplishment as shown in (77):

(77) Activity

a. tagv-ma ori saati i-tsur-a. SG

mouse-Erg two hour RMP-swim-Past.3sg

The mouse swam for two hours.

Accomplishment

b. nav-ma ga-tsur-a SG

ship-Erg PV-swim-Past.3sg

The ship swam off.

(Nash, 2018, p. 9)

The verb loses RMP *i-* when it takes a directional preverb. Nash asserts that this structural change excludes *-av* verbs from true unergative class which is underlyingly headed by monovalent stative verbs.

Nash supports this idea saying that *-av* verbs license addressee datives which function as locative arguments selected by v. Nash entitles these verbs as fake unergatives as they display rather a transitive syntax compared to other monovalent unergative verbs.

We can maintain this claim for Şavşat dialect as well since *-av* verbs show a similar structural variety as shown in (78)-(81). It is important to emphasize if we add an addressee dative to *-av* verbs, this locative argument appears with the null realisation of dative case which Şavşat Georgian employs only for the direct object as discussed in Chapter 1. This supports Nash by showing that *-av* unergatives display a more transitive-like syntax in Şavşat Georgian similar to the standard dialect.

(78) a. k'ar amdi boç-av-s ŞAVŞAT

door.Dat to/until crawl-TS-Present.3sg

S/he/it is crawling to the door.

b. kar amdi i-boç-a

door.Dat to/until RMP-crawl-Past.3sg

S/he/it crawled to the door.

(79) a. saxl amdi gor-av-s

house.Dat to/until roll-TS-Present.3sg

S/he/it is rolling to the house.

b. saxl amdi i-gor-a

house.Dat to/until RMP-crawl-Past.3sg

S/he/it rolled to the house.

(80) a. ga-boç-d-eb-a

PV-crawl-INCH-TS-3sg

S/he/it crawls.

b. ga-boç-d-a

PV-crawl-INCH-3sg

S/he/it crawled.

(81) a. ga-gor-d-eb-a

PV-roll-INCH-TS-3sg

S/he/it rolls.

b. ga-gor-d-a

PV-crawl-INCH-3sg

S/he/it rolled.

In (78) and (79), verbs denote atelic activities when there is no locative argument in the sentence while verbs in (80) and (81) imply a natural end-point for the verbs thanks to the directional preverb even without an overt locative argument. For example, (80a) is interpreted as “The baby crawls till a certain point.” although the end point is not stated overtly.

In this point, I want to suggest that these verbs denote activity unlike other unergatives when they occur with the Thematic Suffix *-av* while they imply accomplishment if they shift to the suffix *-eb*.

As the last remark on unergatives, let us look at Nash’s irregular class. Nash indicates that these verbs express manner of non-verbal expression or manner of movement beside meteorological activities. In (82) and (83), we will see these verbs in both standard and Şavşat dialect.

(82)	Nash’s example	English	Şavşat Georgian
	a. tir-i-s	cry	tiris
	b. bghav-i-s	roar, scream	bghavis
	c. mghre(-i)-s	sing	mgherobs
	d. da-rb-i-s	run	çenavs / gaçenebda

(83)	Nash's example	English	Şavşat Georgian
	a. tov-s	snow	tovs
	b. tsvim-s	rain	tsvims
	c. kux-s	thunder	quxs
	d. dugh-s	boil	dughs

At first glance, we can say that *sing* and *run* differ from Standard Georgian in Şavşat dialect. The verb *sing* aligns with *talk* in (73) and occur with the Thematic Suffix -*ob* while the verb *run* follows the pattern exemplified in (78)-(81) via taking the Thematic Suffixes -*av* and -*eb* in different semantic interpretations accordingly.

Weather verbs exemplified in (83) do not take the Thematic Suffixes both in Standard Georgian and Şavşat Georgian. Similarly, some sound expression verbs do not appear with any suffix in both dialects.

Nash claims that verbs like *cry* and *roar* are not unergative verbs as they occur with auxiliary support constructions as in (84) which is never observed in unergatives:

(84) a. v-tir-i-var

1sg-cry-?-AUX

I am crying.

(Nash, 2018, p. 10)

However, we do not observe such auxiliary support constructions in Şavşat Georgian. The example in (84) is judged as ungrammatical in this dialect. Furthermore, such irregular verbs appear with both RMP *i*- and a perfectivising preverb in perfective

environment contrary to Nash's claim exemplified in (77). As the existence of ergative case marking and RMP *i*- in perfective tenses is the characteristic of unergative verbs, we do not exclude these root verbs such as *tiris* (cry), *bghavis* (roar), *kviris* (shout) and *itsinis* (laugh) from unergative class since they display both ergative marking and RMP *i*- in past tense as shown in (85):

(85) a. iman de-y-bgav-l-a.
3sg.Erg PV-RMP-roar-?-Past.3sg
S/he/it roared.

b. iman de-y-kvir-a.
3sg.Erg PV-RMP-shout-Past.3sg
S/he shouted.

c. iman ga-y-itsin-a.
3sg.Erg PV-RMP-laugh-Past.3sg
S/he laughed.

However, it is obvious that these verbs are divergent since they do not appear with any of the Thematic Suffixes in imperfective tenses.

Nash also does not classify weather verbs as unergative since they behave as *-av* verbs in (78)-(81) and can occur with either RMP *-i* or a perfectivising preverb as in (85):

(85) a. ori saati i-tov-a tbilis-shi.

two hour RMP-snow-Past.3sg Tbilisi-in

It snowed for two hours in Tbilisi.

b. tovl-ma da/mo-tov-a.

snow-Erg PV-snow-Past.3sg

The snow snowed down.

(Nash, 2018, p. 10)

We can adopt Nash's claim on weather verbs as Şavşat Georgian allows these verbs to occur either with RMP *i-* or a perfectivising preverb. Moreover, these verbs mark their locative argument with the null realisaiton of dative case which is allocated for the direct object in Şavşat dialect as shown in (86). In this sense, weather verbs are in line with *-av* unergatives exemplified in (78)-(81) regarding to have a more transitive-like syntax.

(86) a. Tovl-ma i-tovl-a.

snow-Erg RMP-snow-3sg.Past

The snow snowed.

b. Bozüyük ga-tovl-d-a.

Bozüyük.Dat PV-snow-INCH-3sg.Past

It snowed to Bozüyük.

Taking examples in (84) and (86) into consideration, we can state that root verbs which do not appear with any of the Thematic Suffixes vary in argument structure.

3.3.2 Unaccusatives

For Standard Georgian, Nash (2018) indicates that all unaccusative verbs take the Thematic Suffix *-eb*. In this section, we will discover the picture in Şavşat dialect. Following Öztürk and Taylan's (2017) classification of Thematic Suffixes in Pazar Laz, the unaccusative verbs will be discussed under three semantic classes: achievements, degree achievements and verbs of directed motion.

(87) a. sq-d-eb-a
pop-TS-Present.3sg
It is popping.

b. q-d-eb-s
die-TS-Present.3sg
S/he is dying.

c. xu-d-eb-a
crash-TS-Present.3sg
It is crushing.

d. dstq-d-eb-a

crack-TS-Present.3sg

It is cracking.

Examples in (87) are achievement verbs. These examples demonstrate that Şavşat Georgian follows the pattern of the standard dialect and achievement unaccusatives take the Thematic Suffix -*eb*.

Let us look at degree achievement verbs in (88):

(88) a. şav-d-eb-a

black-TS-Present.3sg

It is getting dark.

b. lamaz-d-eb-a

beautiful-TS-Present.3sg

It is getting beautiful.

c. zvel-d-eb-a

old-TS-Present.3sg

It is getting old.

d. chrugh-d-eb-a

decay-TS-Present.3sg

It is decaying.

e. tsiv-d-eb-a

cold-TS-Present.3sg

It is cooling.

We can observe that degree achievement verbs also take the Thematic Suffix *-eb* following the same pattern with achievement verbs.

Our last subclass of unaccusatives is verbs of directed motion. Examples in (89) show that also these verbs appear with the Thematic Suffix *-eb*:

(89) a. eqvançx-eb-a

climb-TS-Present.3sg

S/he is climbing.

b. axlov-d-eb-a

here-TS-Present.3sg

S/he is approaching.

c. shor-d-eb-a

far-TS-Present.3sg

S/he is moving away.

d. maghl-d-eb-a

high-TS-Present.3sg

S/he is rising.

e. dabld-eb-a

low-TS-Present.3sg

S/he is descending.

Examples in (87), (88) and (89) demonstrate that all unaccusatives -achievement unaccusatives, degree achievement unaccusatives and directed motion unaccusatives- take the Thematic Suffix -*eb* in Şavşat Georgian likewise they do in the standard dialect. As most of these verbs denote change of state verbs, we can claim that Şavşat Georgian marks the change with the Thematic Suffix -*eb* while it marks states with -*ob*.

3.3.3 Transitives

We can study transitive verbs under three semantic subclasses: transitive accomplishments, transitive achievements and transitive activities. Nash (2018) indicates that transitive eventive verbs mostly take -*eb*, -*av* and ø in Standard Georgian.

Let us first look at transitive accomplishment verbs in Şavşat dialect:

(90) a. a-kapan-eb-s

PV-close-TS-Present.3sg

S/he is closing it.

b. a-gh-eb-s

PV-open-TS-Present.3sg

S/he is opening it.

c. a-shen-eb-s

PV-build-TS-Present.3sg

S/he is building it.

d. a-genish-eb-s

PV-large-TS-Present.3sg

S/he is enlarging it.

e. a-qvitl-eb-s

PV-yellow-TS-Present.3sg

S/he is yellowing it.

Examples in (90) show that transitive accomplishment verbs take the Thematic Suffix *-eb*. With these cases, we can maintain the claim that the language spells the concept of change via *-eb* suffix since given transitive accomplishment verbs also denote a change of state in parallel to the case of unaccusatives denoting a change of state.

Our second subclass of transitives is activity verbs. Let us look at which Thematic Suffix is used with transitive activities:

(91) a. tsq-av-s

carry-TS-Present.3sg

S/he is carrying it.

b. sv-av-s

drink-TS-Present.3sg

S/he is drinking it.

c. silg-av-s

wipe-TS-Present.3sg

S/he is wiping it.

d. tser-av-s

write-TS-Present.3sg

S/he is writing it.

e. u-dingl-av-s

PV-listen-TS-Present.3sg

S/he is listening to it.

In transitive activity verbs, we observe the *-av* suffix. We can claim that the Thematic Suffix *-av* may signify succession without implying any change or a terminus as we have also observed this suffix in undirected motion verbs which are fake unergatives exemplified in (77) and (78). It is worth remembering that these verbs undergo semantic shift when they occur with the Thematic Suffix *-eb* and imply accomplishment. We observe the same pattern in transitive activity verbs only if the verb is compatible with location change meaning as in (92):

(92) Ahmet-ay saxl-amdi shesha da-tsq-eb-s.

Ahmet-Nom house-till wood.Dat PV-carry-TS-Present.3sg

Ahmet carries the wood to house.

As the last remark of this section, I want to mention the third subclass of transitive verbs which consists of limited number of verbs compared with other groups. Before discussing their lexical semantics, let us look at the examples:

(93) a. a-kts-ev-s

VV-topple-TS-Present.3sg

S/he is toppling it.

b. a-ngr-ev-s

VV-demolish-TS-Present.3sg

S/he is demolishing it.

c. i-kn-ev-s

VV-throw-TS-Present.3sg

S/he is throwing it.

d. a-tsetsxl-ev-s

VV-fire-TS-Present.3sg

S/he is igniting it.

e. a-kts-ev-s

VV-escape-TS-Present.3sg

S/he is causing him/her escape.

These verbs appear with *-ev* which is a rarely used Thematic Suffix in this dialect. We can classify these verbs as transitive achievement verbs that involve two phases. In the first phase, the agent initiates the event having a direct impact on the theme argument and in the second phase of the event the theme continues to undergo the change by itself without the involvement of the agent.[6]

Let us summarize what we have covered throughout the Section 3.3 in Table 9:

[6] Öztürk and Taylan (2014) argue that Pazar Laz employs a specific marker set for transitive achievement verbs that comprise two phases. These verbs appear with the Thematic Suffix *-am* and the valency marker *-o* as shown in (1):

(1)	Ahmedi-k	kva	**o**-t'och-**am**-s.
	Ahmedi-Erg	stone.Dat	Val-throw-TS-Present.3sg
	Ahmet throws/is throwing the stone.		

They claim that the presence of valency marker -o in such constructions signals that the event involves two separate phases. The subject is only involved in the initiation phase which leads a change in the theme. Then, the initiator effect is dissociated in the second phase and the theme continues to undergo the change all by itself. Pazar Laz displays the same valency marker in causative constructions in which the causer adds a new phase to the structure.

In Şavşat Georgian, a small group of transitive verbs display the same pattern. These verbs appear with the Thematic Suffix *-ev* and the valency marker *a-* which can also mark causativity. These verbs involve two phases such as in (2): Ahmet has started to demolish the house (initial phase) and the house undergoes an independent demolishing (second phase).

(2)	Ahmet-ay	saxl	a-ngr-ev-s.
	Ahmet.nom	house.Dat	VV-demolish-TS-present.3sg
	Ahmet is demolishing the house.		

Table 9. Syntactic and Semantic Correlates of the Thematic Suffixes

TS	**Lexical Aspect**	**Argument Structure**
-ob	States	Unergative
-eb	Achievements, Accomplishments	Unaccusative, Transitive
-av	Activities	Transitive, Fake Unergative
-ev	Two-Phase Achievements	Transitive

3.4 Thematic Suffixes and argument structure

In the previous sections, we have discussed the dynamics between the Thematic Suffixes and Aspect. We have observed that the Thematic Suffixes only occur in imperfective aspect and different realisations of TS denote different semantic classes based on lexical aspect. In the current section, we will discover whether there is any correlation between the Thematic Suffixes and argument structure, that is whether the choice of Thematic Suffixes correlate with (in)transitivity and certain voice patterns.

This discussion finds its basis in Öztürk and Taylan's (2017) study. In this study, Öztürk and Taylan argue that the Thematic Suffixes express both lexical aspect of the verbs and their voice feature in Pazar Laz. As they suggest Pazar Laz displays a three-way voice system, namely initiator voice, undergoer voice and impersonal voice.

In Pazar Laz, transitive and unergative verbs appear with ergative case and they typically surface in initiator voice while unaccusative verbs may either emerge in impersonal voice or in undergoer voice (Öztürk & Taylan, 2017, p. 13). This system manifests itself in the Thematic Suffix selection. The distribution is as follows: Initiator

voice appears with the Thematic Suffixes *-am* /*-um* while undergoer voice appears with the Thematic Suffix *-u(r)* and impersonal voice appears with the Thematic Suffix *-e(r)*.

The Thematic Suffix *-am* appears in unergatives, namely atelic activity verbs and verbs of emission as in (94), and in transitives with unaffected objects which typically denote activities or accomplishments as in (95). The subject of these verbs bears the macro role Initiator:

(94) a. Bere-k i-bgar-am-s.
child-Erg Val-cry-TS-Present.3ps
The child is crying/cries.

b. Ntsa-k gurgul-am-s.
sky-Erg clap-TS-Present.3ps
Thunder claps/is clapping.

(95) a. Amedi-k t'abaxi çx-am-s.
Ahmet-Erg plate.nom wash-TS-Pres.3ps
Ahmet is washing/washes the plate.

b. Amedi-k dişka mo-ğ-am-s.
Ahmet-erg wood.nom PV-bring-TS-Pres.3ps
Ahmet is bringing wood.

(Öztürk & Taylan, 2017, p. 7)

The Thematic Suffix -um occurs in transitive verbs with affected objects whose subject also bears the Initiator macro role as in (96):

(96) a. Ahmedi-k şee-pe nax-um-s.
Ahmet-Erg laundry-Pl.Nom wash-TS-Present.3ps
Ahmet is washing laundry.

b. Bere-k ham tzari ş-um-s.
child-Erg this water.Nom drink-TS-Present.3ps
The child is drinking this water.
(Öztürk & Taylan, 2017, p. 8)

The Thematic Suffix *-u(r)* is used in unaccusatives which include achievements verbs, degree achievement verbs and verbs of directed motion. The only argument of these verbs is a nominative Undergoer as in (97):

(97) a. Balon-epe t'vats-u-n.
balloon-Pl.Nom pop-TS-Present.3ps
The balloons are popping.

b. Xava mts'up-u-n.
weather.Nom get.dark-TS-Present.3ps
It is getting dark.

c. Bere ey-ul-u-n.

child.Nom PV-climb-TS-Present.3ps

The child is climbing up.

(Öztürk & Taylan, 2017, pp. 8-9)

The last Thematic Suffix of Pazar Laz *-e(r)* occurs with unaccusative verbs which are intransitive impersonal structures whose sole argument is in Impersonal voice as in (98). Note that *-e(r)* always requires the preverbal voice marker *i-*:

(98) a. T'abaxi i-çx-e-n.

plate.Nom Val-wash-TS-Present.3ps

The plate is being washed.

b. Cami i-tax-e-n.

glass.nom Val-break-TS-Present.3ps

The glass breaks/is being broken.

c. Ora i-chod-e-n.

time Val-end-TS-Present.3ps

Time is running out.

(Öztürk & Taylan, 2017, p. 9)

Above examples show that Pazar Laz displays a consistent system which correlates the Thematic Suffixes with the argument structure. While *-e(r)* and *-u(r)* are

typically used with intransitives, *-u(r)* being compatible with unaccusatives, *-um* consistently occurs with transitives. The Thematic Suffix *-am* is compatible with both transitives and intransitives which are compatible with Initiator voice.

To see the picture in Şavşat Georgian, let us first remember the summary Table 9 which shows syntactic and semantic correlates of the Thematic Suffixes in this dialect repeated here as Table 10:

Table 10. Syntactic and Semantic Correlates of Thematic Suffixes in Şavşat Georgian

TS	**Lexical Aspect**	**Argument Structure**
-ob	States	Unergative
-eb	Achievements, Accomplishments	Unaccusative, Transitive
-av	Activities	Transitive, Fake Unergative
-ev	Two-Phase Achievements	Transitive

We can say that Şavşat Georgian does not seem to display a consistent match between the Thematic Suffixes and (in)transitivity. Unlike Pazar Laz which allocates the suffix *-um* for only transitive verbs, we can observe the suffixes *-eb* and *-av* with both transitives and intransitives in Şavşat Georgian.

Monovalent structures look more selective than transitives; they only occur with a certain realisation of Thematic Suffixes. All unaccusatives appear with the Thematic Suffix *-eb* while all unergatives take the suffix *-ob* if we exclude fake unergatives. Though, this selectiveness depicts a pseudo-consistency since unaccusative class is not

the only one which employs the Thematic Suffix *-eb*. Instead, we observe TS *-eb* also in transitive structures.

In this point, I want to touch upon causative constructions which are partially related to the Thematic Suffixes. Hewitt (1996) describes how causative is constructed in Standard Georgian as follows:

> Almost without exception the universal marker of causation is the suffix *-in-*, and, together with its root, it forms a verbal base which belongs to the class of verbs with the thematic suffix *-eb-*, thereby giving the suffixal sequence *-in-eb* in the present indicative. Some verbs, however, add an extra initial suffix *-ev-*, thereby giving the suffixal sequence *-ev-in-eb* in the present indicative. (Hewitt, 1996, p. 351)

In the following lines, we will discover transitivised/causativised structures in Şavşat Georgian among different verb types.

Examples in (99) show that activity denoting "fake unergative" *-av* verbs are transitivised via causativising/transitivising prefix *a-* and the Thematic Suffix *-eb*.

(99) a. gor-av-s ŞAVŞAT

roll-TS-Present.3sg

S/he is rolling.

b. a-gor-eb-s

PV-roll-TS-Present.3sg

S/he is rolling it.

c. chen-av-s

run-TS-Present.3sg

S/he is running

d. a-chen-eb-s

PV-run-TS-Present.3sg

S/he is making him/her run.

Stative verbs also follow the same pattern with fake unergative class and they are causativised via causativising/transitivising prefix *a-* and *-eb* as in (100):

(100) a. pişmn-ob-s ŞAVŞAT

regret-TS-Present.3sg

S/he is regretting.

b. a-pişman-eb-s

PV-regret-TS-Present.3sg

S/he is making her/him regret.

c. pikr-ob-s

think-TS-Present.3sg

S/he is thinking.

d. a-pikr-eb-s

PV-think-TS-Present.3sg

S/he is making her/him think.

In the transitive category, activity denoting *-av* verbs are causativized via the causative suffix *i-*, which is possibly the reduced version of the traditional *-in-*, and the Thematic Suffix *-eb* as shown in (101):

(101) a. tser-av-s ŞAVŞAT

write-TS-Present.3sg

S/he is writing it.

b. a-tser-i-eb-s

PV-write-VV-TS-Present.3sg

S/he is making him/her write it.

c. tsq-av-s

carry-TS-Present.3sg

S/he is carrying it.

d. a-tsq-i-eb-s

PV-carry-VV-TS-Present.3sg

S/he is making him/her carry it.

Second transitive category *-ev* verbs which denote two-phase achievements are causativized via causativizing/transitivizing prefix *a-* and the complete causative template *-ev-in-eb* as in (102). The status of the *-ev* component in this complex causative marker is not clear since it may be either a realisation of the Thematic Suffixes which belongs to the verb root or a subpart of the causative affix as described in Hewitt (1996).

(102) a. i-kn-ev-s ŞAVŞAT

PV-throw-TS-Present.3sg

S/he is throwing it.

b. a-kn-ev-ni-eb-s

PV-throw-TS-VV-TS-Present.3sg

S/he is making her/him throw it.

c. a-ngr-ev-s

PV-demolish-TS-Present.3sg

S/he is demolishing it.

d. a-ngr-ev-ni-eb-s

PV-demolish-TS-VV-TS-Present.3sg

S/he is making him/her demolish it.

As the last transitive class, *-eb* verbs are causativised via causativizing/ transitivizing prefix *a-*, the reduced causative marker *-i* and the Thematic Suffix *-eb* as in

(103). It is important to note that the verb keeps it original Thematic Suffix *-eb*. We thus can claim that *-ev* suffix observed in causative form of two-phase achievement verbs is also the original Thematic Suffix instead of being a subpart of Hewitt's causative template.

(103) a. a-shen-eb-s ŞAVŞAT

PV-build-TS-Present.3sg

S/he is building it.

b. a-shen-eb-i-eb-s

PV-build-TS-VM-TS-Present.3sg

S/he is making him/her build it.

Let us summarize causative constructions based on different verb types in Table 11:

Table 11. Causative Constructions in Şavşat Georgian

Argument Structure	**Thematic Suffix**	**Saving Original TS**	**Trans. Prefix a-**	**Causative Marker**
Unergative	-ob	No	Yes	-eb
Fake Unergative	-av	No	Yes	-eb
Transitive	-av	No	Yes	-i...-eb
Transitive	-eb	Yes	Yes	-i...-eb
Transitive	-ev	Yes	Yes	-ni...-eb

As we observe in (99)-(103), this dialect employs the Thematic Suffix *-eb* as the stable component of causative marker which can appear with optional *-i-/-ni-* component. This consistency can bring forward a question whether we can relate the suffix *-eb* with transitivity. However, it seems impossible to adopt this idea since all unaccusative verbs which are monovalent also occur with the suffix *-eb*.

To remember, we relate the Thematic Suffix *-eb* with the concept of change in our analysis. It may be claimed that voice system employs the suffix *-eb* to denote change in valency of the verb which maintains the correlation between *-eb* and change.

To conclude the discussion regarding the relationship between the Thematic Suffixes and the argument structure, we need to emphasize that the Thematic Suffixes do not consistently reflect argument structure in Şavşat Georgian compared to Pazar Laz which relates the particular forms of the Thematic Suffix with particular argument structures. As Table 9 summarizes, a certain form of the Thematic Suffixes can appear in both transitive and intransitive structures in Şavşat dialect. We can thus safely state that Thematic Suffix is a true aspectual morpheme which gives information on both grammatical aspect and lexical aspect in Şavşat Georgian.

3.5 Summary

In this chapter, our aim was to provide a descriptive analysis of the Thematic Suffixes regarding their function in Şavşat Georgian. In Section 3.2, we discussed the relation between the Thematic Suffixes and grammatical aspect and we revealed that the Thematic Suffixes are compatible with environments which are imperfective in terms of morphological structure and semantics. In Section 3.3, we focused on the dynamics between the Thematic Suffixes and lexical aspect and we showed that Şavşat Georgian

employs particular realisations of the Thematic Suffix for certain lexical aspect classes. We can summarize this pattern as follows: The Thematic Suffix *-ob* appears in state verbs, the suffix *-av* occurs in activity verbs, the suffix *-ev* occurs in two-phase achievement verbs and the suffix *-eb* occurs in accomplishment and achievement verbs which denote a change of state. In Section 3.4, we questioned the possible relation between the Thematic Suffixes and argument structure and we concluded that the Thematic Suffixes in Şavşat Georgian do not systematically reflect information on argument structure since a certain form of the Thematic Suffixes can occur both in transitive and intransitive sentences.

CHAPTER 4

SYNTAX OF THE THEMATIC SUFFIXES

4.1 Introduction

As demonstrated in Chapter 3, the Thematic Suffixes reflect information on grammatical and lexical aspect in Şavşat Georgian. Although aspect is an area mostly discussed under the domains of semantics and morphology, its reflection on syntax also strikes researchers' attention (Travis, 2010). As the outset, we recall the description of two categories of aspect, namely grammatical aspect and lexical aspect.

Grammatical aspect is morphological aspect such as perfective/imperfective which is also called as viewpoint aspect in the literature. Travis (2010) states that syntacticians deal with grammatical aspect basically creating another head within the inflectional domain of a clause. Relevant morphological material is hosted by this head which feeds semantic component.

On the other hand, lexical aspect refers to Aktionsart such as Accomplishment, Achievement, Activity, and State presented by Vendler (1967) which is also called as situation aspect. Among the languages, the ones are rare in which lexical aspect is realised morphologically.

In her comprehensive study on aspect, Travis (2010) puts forward that both grammatical aspect (outer aspect in Travis) and lexical aspect (inner aspect in Travis) are encoded in syntax via different means. In Şavşat Georgian case, the presence of the Thematic Suffixes is the sign of imperfectivity. Furthermore, different realisations of the

Thematic Suffixes denote different lexical aspectual classes. Thus, Şavşat Georgian provides evidence for the claim of Travis regarding aspect-syntax mapping.

Throughout this chapter, we will discover the syntactic representation of the Thematic Suffixes in Şavşat Georgian. Following Travis (2010), we will adopt a structure which includes two distinct positions for grammatical/outer and lexical/inner aspect. The Thematic Suffixes are realised in these two interacting positions in Şavşat Georgian.

We will also discuss the presence of the Thematic Suffixes in causative structures which looks problematic at first glance. The source of the problem is two-fold: First, the Thematic Suffixes occur with the causative structures in the perfective aorist conjugation which is contrary to the expectation given that Thematic Suffixes encode imperfectivity, and second, causative structures exemplify either single or double realisation of the Thematic Suffixes in present tense throughout different verb types which necessitates an explanation as demonstrated in examples (104):

(104)

Verb	Present	Pres. Causative	Aorist	Aor. Causative
a. think	pikr-**ob**-s	a-pikr-**eb**-s	de-y-pikr-a	a-pikr-a
b. get red	tsilt-d-**eb**-a	a-tsilt-**eb**-s	ga-tsilt-d-a	ga-a-tsilt-a
c. run	çen-**av**-s	a-çen-**eb**-s	i-çen-a	a-çen-a
d. write	tser-**av**-s	a-tser-**(eb)**-i-**eb**-s	da-tser-a	da-a-tser-**(eb)**-i-a
e. build	a-şen-**eb**-s	a-şen-**eb**-i-**eb**-s	a-a-şen-a	a-a-şen-**eb**-i-a
f. throw	i-kn-**ev**-s	a-kn-**ev**-ni-**eb**-s	ge-y-kn-a	ga-a-kn-**ev**-ni-a

Let us describe the puzzle in detail. In the present causative, some verbs exemplify double realisation of TS as in (104e) and (104f), while others occur with single TS as shown in (104a), (104b) and (104c). The picture is as follows: Unergative verbs which occur with the TS *-ob* do not allow double TS sequence in their causative forms, which excludes *-ob…-eb* order as shown in (104a). Similarly, unaccusative verbs do not permit double TS realisaiton in their causative form as in (104b). In transitive verbs, we observe a variation. Transitive accomplishment verbs which occur with the TS *-eb* and transitive achievement verbs which occur with the TS *-ev* display double TS sequence in their causative conjugation as demonstrated in (104e) and (104f) respectively, while transitive activity verbs which occur with the TS *-av* do not allow double TS realisaiton in causative as in (104d). In such verbs, either single TS occurs or -eb…-eb sequence is realised. As the result, *-ev…-eb* and *-eb…-eb* sequences are manifested while *-ob…-eb* and *-av…-eb* sequences are left out. Let us see the summary of double TS realisaiton patterns in present causative structures in Table 12:

Table 12. TS Realisation in Present Causative Structures

Verb Type	Original TS	Double TS Realisation
Unergative	-ob	*-ob…-eb
Unaccusative	-eb	*-eb…-eb
Transitive Activity	-av	*-av…-eb
Transitive Achievement	-ev	-ev…-eb
Transitive Accomplishment	-eb	-eb…-eb

Let us move onto the second issue. As we have covered in Chapter 3, the Thematic Suffixes only occur in the imperfective conjugation. When we examine the causative structures in the perfective aorist tense, we see that some verbs preserve their Thematic Suffixes even though there is no implication of imperfectivity. To be more specific, transitive achievement and accomplishment verbs appear with the Thematic Suffixes *-ev* and *-eb* in their aorist causative form, while unergative and unaccusative verbs do not display the presence of TS in aorist causative. The case is not clear in transitive activity verbs since they optionally occur with the TS *-eb* which is not the default TS of activity verbs. Let us summarize the presence of TS in aorist causative in Table 13:

Table 13. TS Realisation in Aorist Causative Structures

Verb Type	Original TS	TS in Aorist Causative
Unergative	-ob	Ø
Unaccusative	-eb	Ø
Transitive Activity	-av	Ø / -eb
Transitive Achievement	-ev	-ev
Transitive Accomplishment	-eb	-eb

To account for these problems, we will exploit Nash's (2018) causative analysis in which she suggests different voice structures for monovalent and bivalent verbs and Travis' Outer-Inner Aspect analysis which interacts with the presence of an internal

argument. In the following, we will first review these two accounts and then move onto the discussion of the problem we have set above.

4.2 Travis (2010): Inner and outer aspect

Travis (2010) states that grammatical aspect is a functional category on a head within the inflectional domain. Lexical aspect is also realised on a head, namely the light verb, which appears in the lexical domain of the clause. Based on this distinction, she calls grammatical aspect as outer aspect (OAspP) and lexical aspect as inner aspect (AspP).

Travis describes the structure she suggests as follows:

> There are two VP shells in the sense of Larson which I label V1 and V2. Between these two shells is an inflectional (functional) category, ASP. Above these two shells is another functional category E(vent). Outer Aspect (OASP) takes scope over this entire event (EP). V1 is a lexical category that introduces the external argument and when it does it has a meaning similar to CAUSE. ASP, depending on its feature content, has a meaning similar to BE/BECOME. V2 introduces the Theme argument and the endpoint of the event, XP. (Travis, 2010, p. 5)

(105)

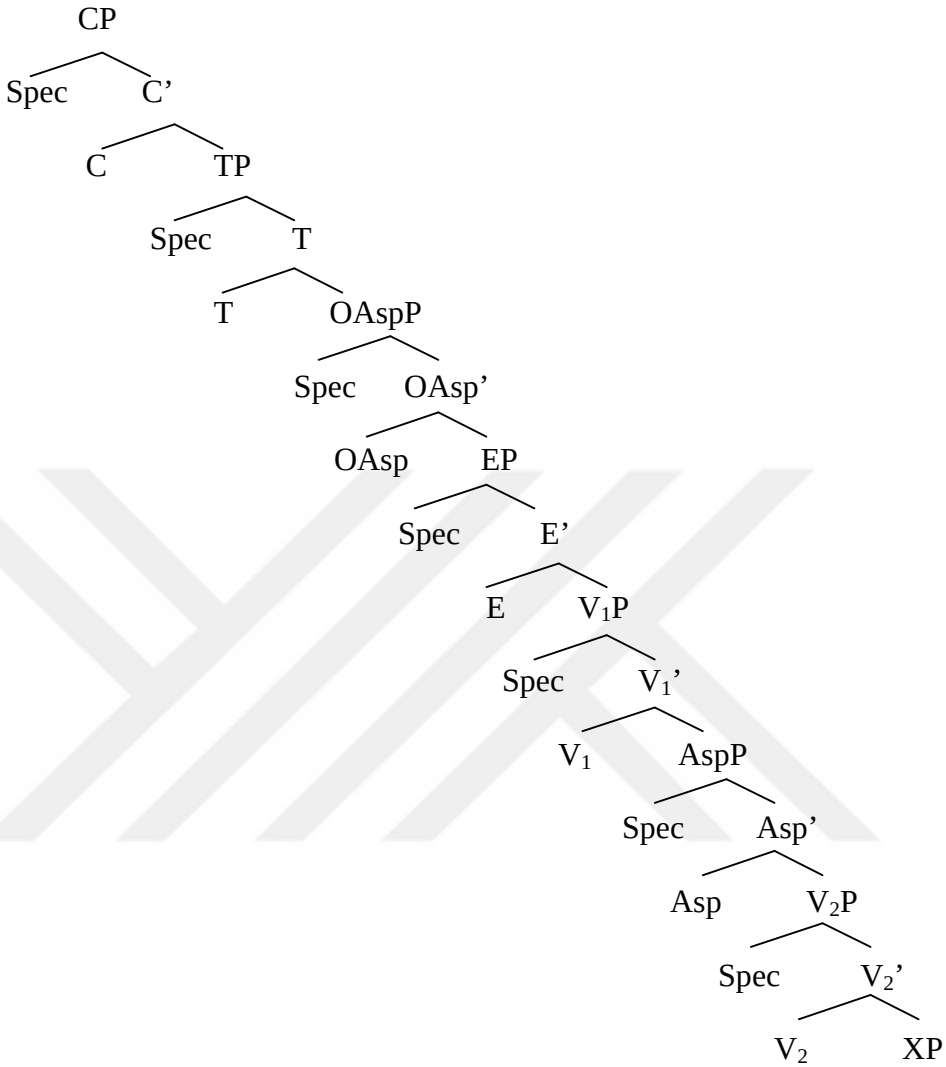

(Travis, 2010, p. 5)

To argue this articulated structure, Travis claims that object movement may target a position within VP, below the merged position of the external argument. She also claims that aspectual morphology may appear below V_1. Combining these two observations, Travis suggests that the derived object moves to the specifier position of the aspect rather than adjoining to V_2P.

Object movement is a remarkable issue for us since it is strongly related with inner aspect. Though, before discussing object movement, let us look at the aspectual morphology of Tagalog to visualize the syntactic structure Travis has suggested.

Travis uses the verb root *tumba* (fall down) as her example. To see the verb root in different valency forms, she provides *t-um*[7]*-umba* (X fall down) and *m-pag-tumba* (Y knock X down). To be clearer, the unaccusative form of the verb appears as the bare root while the transitive version appears as the bare root plus *pag-* which is argued to be the marker for introducing the external argument.

Tagalog has two aspectual morphemes. One is *n-/-in-* which denotes the event has started (+start) and the other is a reduplicated morpheme which denotes the event has not ended (+incomplete) yet. Travis states that *n-/-in-* appears above *pag-* while reduplication occurs between *pag-* and the root. The sequence is demonstrated in (106):

(106) nagtutumba (Imperfective)

n	*m*	*pag*	*tu*	V
Outer Asp.	TM	Inner Asp		
(+start)		(+incomplete)		

Travis suggests that *pag-* is realised in V_1, the verb root is in V_2 and the reduplicative morpheme is in Inner Aspect.

Travis proposes that this articulated VP structure provides a configuration in which the four classes of Aktionsart can be represented with two VP shells, namely V_1 and ASP. Travis puts forward that V_1 carries information related to PROCESS (or

[7] *um- / m-* is the topic marker (TM) in Tagalog.

duration) and ASP carries information related to DEFINITE (or telicity). Table 14 summarizes the relation between event types and features.

Table 14. Features of Verb Classes in Travis (2010)

	-PROCESS	**+PROCESS**
-DEFINITE	State	Activity
+DEFINITE	Achievement	Accomplishment

Travis puts forward that the value of Aspect is complex since it is defined by the computation of the elements inside its domain. As the matter of relevance, we will focus on Theme argument and telicity (definiteness) among other elements of Aspect domain.

As we are familiar from the literature, some aspectual information comes from the predicate itself (Vendler, 1967). Even if they appear with the same object type, the verbs *build* and *push* denote different eventualities, namely *build* denotes accomplishment while *push* denote activity:

(107)

a. Mary built a cart (in 3 hours/*for 3 hours). Accomplishment

b. Mary pushed a cart (*in 3 hours/for 3 hours). Activity

However, Travis states that "…the presence of and type of object is also crucial." As the example, *run* is an activity while *run a mile* is an accomplishment. *Build* with a singular object is an accomplishment while *build* with a bare plural is an activity.

(108)

a. Mary ran (*in 3 hours/for 3 hours). Activity

b. Mary ran a half-marathon (in 3 hours/*for 3 hours). Accomplishment

c. Mary built a cart (in 3 hours/*for 3 hours). Accomplishment

d. Mary built carts (*in 3 hours/for 3 hours). Activity

In this point, let us go back to derived object movement issue. Travis proposes that derived objects move to the specifier position of the aspectual head to take place within the computational domain of Inner Aspect head. By doing so, the presence and type of the Theme argument can interact with the telicity (definiteness) value of the Aspect head which directly affects the determination of the Aktionsart class of the predicate as shown in examples above. The suggested structure with moved derived object is provided below:

(109)

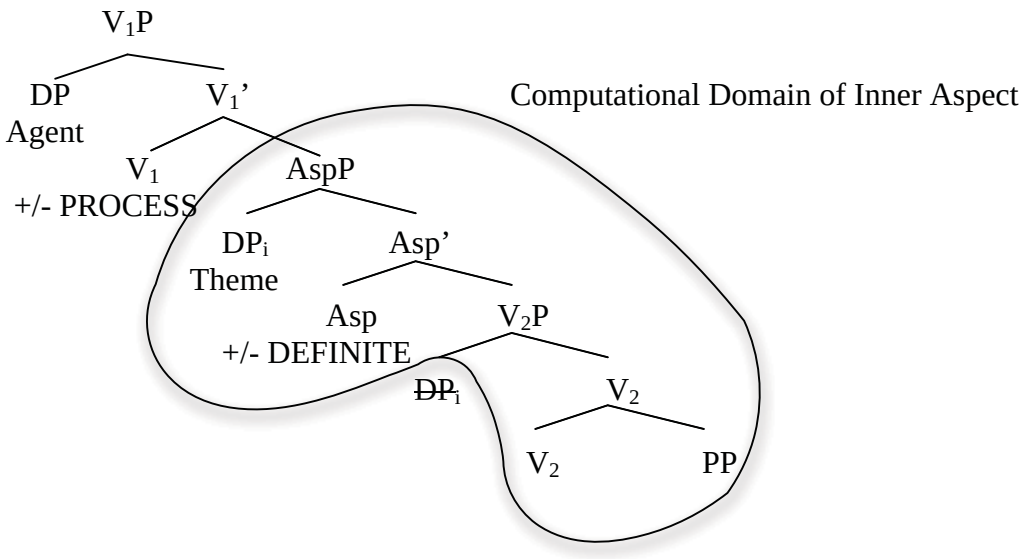

The above analysis will play a crucial role in accounting for the distribution of the Thematic Suffixes in Şavşat Georgian. Before discussing the picture in Şavşat Georgian in detail, let us cover syntactic representation of Georgian causatives which is related to the presence of the Thematic Suffixes especially a certain realisation *–eb* in relation to the account of causatives by Nash (2018).

4.3 Nash (2018): Syntax of Georgian causatives

As touched upon in Chapter 3, Georgian verbs undertake causative meaning by the addition of a circumfix *a-…-in-eb* (Aranson, 1990). The status of the *-eb* component of this circumfix is contradictive in the literature since the language employs this affix as a realisation of the Thematic Suffixes.

To account for the syntactic structure of Georgian causatives, Nash (2018) suggests a two-layered VoiceP for transitive verbs which occur with both *a-* and *-in-* markers unlike unaccusative and unergative verbs which only appear with transitivizer/causativizer marker *a-* headed by single VoiceP as shown below structures:

(110) Causative of Transitives

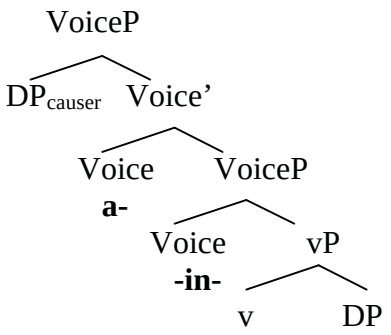

(111) Causative of Unaccusatives

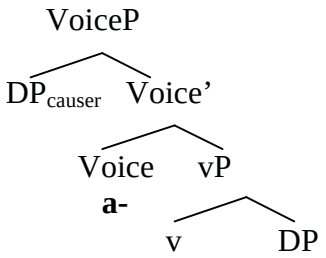

(112) Causative of Unergatives

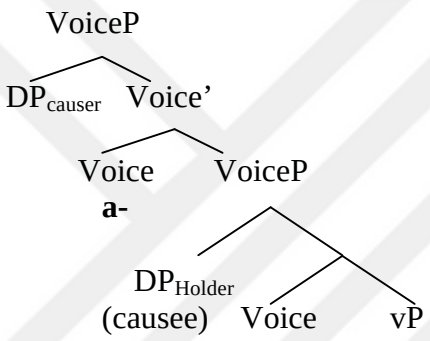

As seen in the trees above, Nash does not suggest a place for TS *-eb* which is categorized under the domain of causative marker in the traditional grammar (Aranson, 1990; Hewitt, 1995). In the following sections, we will suggest tree structures for the Thematic Suffixes and also causative structures to account for the syntax of verbal domain Şavşat Georgian.

4.4 Syntactic representation of different verb types in Şavşat Georgian

Our suggestion for the syntactic representation of the Thematic Suffixes is as follows: The Thematic Suffixes are base-generated in Inner Aspect head to encode lexical aspect then they move to Event head to check imperfectivity. This structure seems to be

compatible with all verb types namely transitives, unaccusatives and unergatives. However, we will revise this structure in causative constructions since causativised transitive verbs can appear with a double realisation of the TS unlike unaccusatives and unergatives as discussed earlier in detail.

4.4.1 Syntax of transitives

Transitive predicates in Şavşat Georgian comprise activity, accomplishment and achievement verbs which occur with different realisations of TS. Namely, the Thematic Suffix *-av* for activity transitives, *-eb* for accomplishment transitives and *-ev* for two-phase achievement transitives.

In each type of the transitive predicate, the Thematic Suffix originates in the lower aspect head according to the lexical semantic of the root and then it moves to higher aspect position to check imperfectivity. It is important to note that some transitive verbs occur with valency markers *a-* or *i-*. However, these markers do not block the movement of the TS under head movement, since they appear in the preverbal domain.

(113) a-şen-eb-s Transitive Accomplishment
PV-build-TS-3sg.
S/he is building it.

(114) i-kn-ev-s Transitive Achievement
PV-throw-TS-3sg.
S/he is throwing it.

(115) tser-av-s Transitive Activity

write-TS-3sg.

S/he is writing it.

(116) Transitive accomplishment, achievement and activity verbs

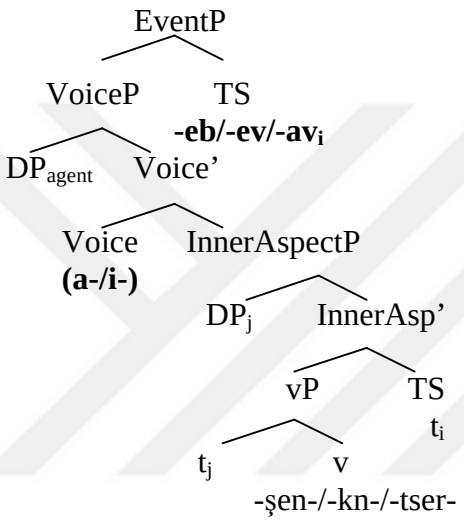

As demonstrated in (116), the Theme argument moves to the specifier position of the Inner Aspect to check telicity feature of this head as suggested in Travis (2010) since both accomplishment and achievement verbs denote a change on object between the starting and ending point of the verb. This system is not valid for activity verbs which we will discuss later.

In the causativised versions of the transitive verbs, a different syntactic structure appears. As we can remember from Chapter 3, causatives of transitive verbs appear with double realisation of TS as shown below:

(117) Causative in the present

a. a-şen-eb-i-eb-s Accomplishment

S/he is making him/her build it.

b. a-kn-ev-ni-eb-s Achievement

S/he is making him/her throw it.

c. a-tser-(eb)-i-eb-s Activity

S/he is making him/her write it.

It is important to note that the causative form of the activity verb either does not display double realisaiton of TS or it appears with the *-eb…-eb* sequence even though the expected pattern is to be *-av…-eb*. We will turn back to this issue in the following sections.

Let us see the picture in the aorist tense in which the Thematic Suffixes do not normally occur. Interestingly, we observe the Thematic Suffixes in the causative of the transitive verbs in aorist. However, the picture is different than the present causative since there is single realisation of TS in the aorist while there is double realisation of TS in the present:

(118) Causative in the aorist

a. a-a-şen-eb-i-a Accomplishment

S/he made him/her build it.

b. ga-a-kn-ev-ni-a Achievement

S/he made him/her throw it.

c. da-a-tser-(eb)-i-a Activity

S/he made him/her write it.

To account for the realisation of TS in causative structures, we adopt Nash's causative analysis which includes two voice layers since in causative structures both transitiviser *a*- and causative marker -*i*-/-*ni*- appear.

In the demonstrated causative structure, the Thematic Suffix originates in inner aspect head to mark lexical aspect. Thus the realisation of the Thematic Suffix depends on the lexical aspect of the verb root. However, it cannot move to the higher Event head via head movement to check imperfectivity unlike the non-causative structure since the causative head -*in*- blocks this movement. To encode imperfectivity, the language employs the Thematic Suffix -*eb* [8] in the Event head which results in double realisation of the Thematic Suffix in present tense as shown below. Note that the TS in the head of InnerAspP encodes the lexical aspect while the TS in the Event head encodes imperfectivity:

[8] Why the language employs the certain -*eb* realisaiton of TS is open to discussion. In traditional Georgian grammars, this particle is classified as a subcomponent of complex causative marker so this view does not provide an answer. We can suggest that the language exploits TS -*eb* to emphasize the "change" in valency in accordance with the usage of -*eb* as a lexical aspectual marker in verbs denoting change of state according to our analysis.

(119) Causative of present[9]

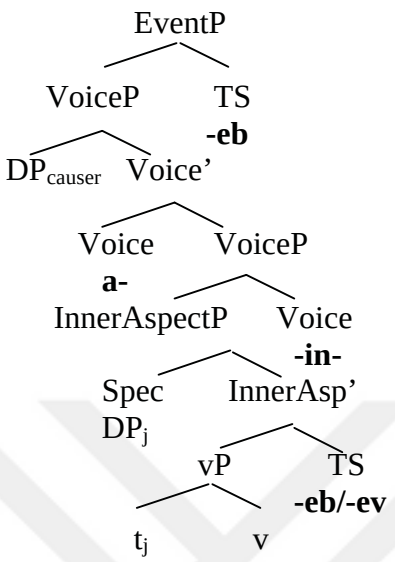

In the aorist tense, the Thematic Suffix is base-generated in the Inner Aspect head. The Theme argument moves into InnerAspect and activates the telicity feature which determines the verb class. However, the higher Event head is left empty in this case since the outer aspect does not demand the presence of any TS due to the perfective nature of aorist tense.

[9] We are aware that the architectures proposed by Nash (2018) do not include a layer for Causee argument, which we think can appear in the Spec of the middle VoiceP. Only the Causer and the Theme arguments are manifested in Nash (2018). Since our main objective is to understand the dynamics of TS realisaiton, we have just focused on the place of TS in the causatives instead of discovering the complete nature of Georgian causatives. Note that there is one view in the literature that such causees are adjuncts rather than arguments (Key 2013, Harley 2017). Whether such a view would hold for causees in Şavşat Georgian requires further investigation, which is not within the scope of this thesis.

120) Causative of aorist

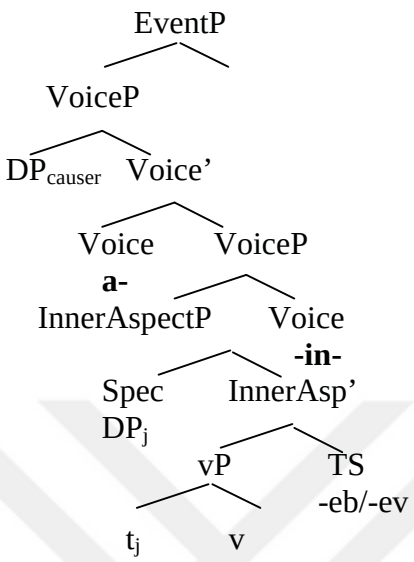

In this point, I want to go back the optionality of TSs in causative forms of transitives denoting activity. To account for this exceptionality, let us remember the derived object movement claim of Travis. We stated that the Theme argument moves to the specifier position of the Inner Aspect head to activate the telicity value.

We claim that the Theme argument does not move to this position in activity verbs since these verbs do not denote any kind of change on internal argument since activity verbs do not involve end point, hence telicity. Thus these verbs do not appear with -av…-eb sequence in the present causative form. Instead, the inner TS just do not appear. When these verbs appear with double TS, the sequence is *-eb…-eb* which shows that the speakers interpret the verb as an accomplishment verb instead of activity verb which we observed before in activity fake unergatives.

As a brief reminder, fake unergative verbs differ from other unergatives since they appear with TS *-av* and denote activity while standard unergatives appear with the

TS -*ob* and denote states. This class also displays a more transitive like morphology and syntax since they appear with the transitive valency preverb *i*- in the aorist and they mark their addressee arguments with the null realisation of dative case which Şavşat Georgian only employs for direct objects as discussed in Chapter 3. Fake unergatives display TS shift from -*av* to -*eb* when the verb occurs with directional preverb since this prefix adds a natural endpoint to the predicate which derives an accomplishment verb form an activity verb as shown below:[10,11]

(121) a. boç-av-s Activity

S/he is crawling.

b. ga-boç-d-eb-a Accomplishment

S/he crawls (till a certain point).

To recap, we argue that in the case of activity denoting transitives, as there is no Theme which interacts with the telicity feature of the InnerAspP we do not observe the lower TS. When a lower TS appears yielding the sequence -*eb*…-*eb*, we argue that the verb is interpreted as an accomplishment verb derived from an activity denoting transitive.

[10] To account for the lower TS shift in causative form of activity transitives, we need to draw an analogy between these verbs and fake unergatives since regular transitives cannot yield a satisfying answer. To be more explicit, activity versus accomplishment time expressions -such as 'Ali wrote the latter in two hours' vs 'Ali wrote latter for two hours'- did not work in imperfective present tense since activity reading is stronger than accomplishment when the predicate occurs in an ongoing tense.

[11]Unfortunately, we also cannot use the definiteness of object to observe the difference between activity transitives and accomplishment transitives since Georgian does not overtly mark the difference between definite and indefinite objects which is used to distinguish activity verbs from accomplishment verbs.

4.4.2 Syntax of unergatives

As discussed in Chapter 3, we classify all Şavşat Georgian unergatives as statives since they are headed by an underlyingly monovalent stative verb, with an external Holder argument. This verb class appears with the Thematic Suffix *-ob*. We maintain Nash's model of syntax for unergative verbs in which these verbs are agentivised in imperfective tenses because of the inherent dynamic feature of imperfectivity via the fusion of Aspect (Event) and Voice categories as demonstrated below:

(113) pikr-ob-s

think-TS-3sg.

S/he is thinking.

(114) Unergative verbs

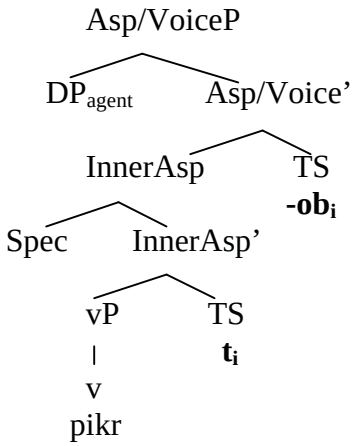

Similar to the unaccusative verbs, TS is base-generated in inner aspect and moves to the higher outer aspect-voice head to check imperfectivity.

Causative form of the unergative verbs is constructed via adding transitivizer/ causativizer preverb *a-* to the verb. Unlike transitive verbs, the Inner Aspect is not active in unergative verbs since there is no Theme argument to check it. Thus, the Inner Aspect marker *-ob* is not realised overtly in the causative version of the verb which totally excludes *-ob…-eb* sequence. Instead, the suffix *-eb* appears in the Event head (see Footnote 8 about the presence of TS *-eb*) and checks imperfectivity. It is important to emphasize that in causative form of unergative, we do not observe Event-Voice fusion since the Voice head is realised via preverb *a*-which requires a separate Voice layer as shown in below:

(115) a-pikr-eb-s

PV-think-TS-3sg.

S/he is making him/her think.

(116) Causative of unergative

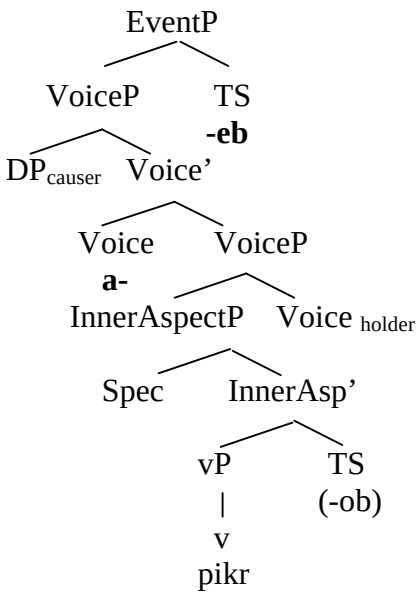

4.4.3 Syntax of unaccusatives

Unaccusative predicates comprise mostly achievement verbs in Şavşat Georgian and such verbs appear with the Thematic Suffix *–eb* which denotes change of state. As we have touched upon, *-eb* is base-generated in Inner Aspect head to mark the lexical aspectual class of the verb and it moves Event head to check imperfectivity since there is nothing blocking this movement as shown below:

(117) tsilt-d-eb-a

red-INCH-TS-3sg.

It is getting red.

(118) Unaccusative verbs

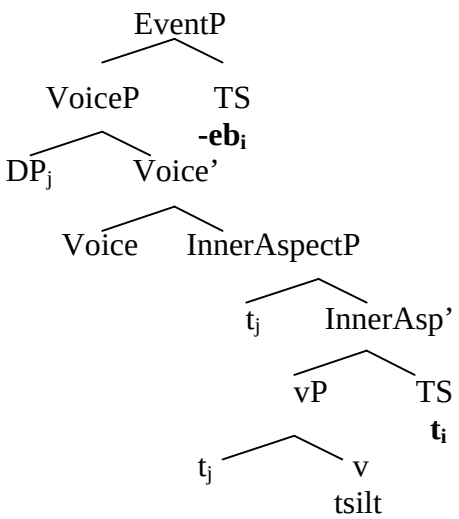

Causative of the unaccusative verb is formed via adding transitivizer/ causativizer preverb *a-*. In this structure, since the verb denotes a scalar change for the internal argument, the telicity value of the Inner Aspect is active as Travis suggested and

so this feature needs to be checked. Furthermore, there is no intervening head between Event head and Inner Aspect head which enables TS to undergo head movement. In this point, I want to remark that unaccusative causative does not display double TS unlike transitive achievement/accomplishment verbs although its Inner Aspect is active thanks to the existence of appropriate Theme argument. To account for this divergence, we suggest that since default TS of unaccusative verbs is same with *-eb* which is employed to check higher Event head in causative structures, only one copy of *-eb* becomes enough to check both Event and Inner Aspect head as there is no intervening head between them as shown below:

(119) a-tsilt-eb-s

PV-red-TS-3sg.

It is making it get red.

(120) Causative of unaccusative

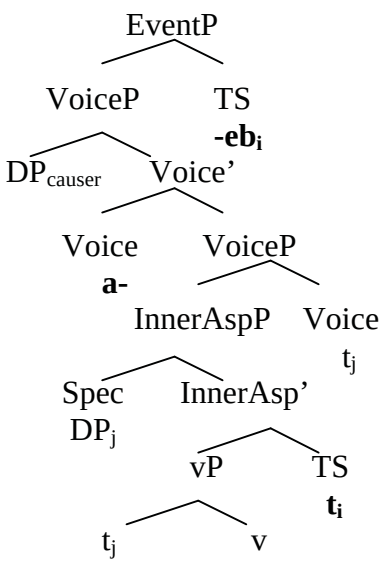

4.5 Summary

In this chapter, our aim was to discover the syntactic representation of the Thematic Suffixes which are realised in two distinct aspectual heads namely Event and Inner Aspect. To account for their systematicity, we also targeted causative structures which consistently display the presence of the TS *-eb*. In Section 4.2, we covered two-layered aspectual system of Travis (2010) suggesting distinct Outer and Inner Aspect heads to lay the ground for our discussion on the realisation sites of TS in Şavşat Georgian. In Section 4.3, we have focused on the structural features of causative constructions proposed by Nash (2018) to understand the syntactical skeleton of causatives which discuss in relation with the realisaiton of TS. In Section 4.4, we put the arguments of Travis and Nash together and based on them we have suggested tree structures for the realisation of TS in both non-causative and causative forms of the verbs. Our suggestion for the default mechanism as follows: The Thematic Suffixes are generated in Inner Aspect head to mark the lexical aspectual class of the verb and then they move to higher Event head to check imperfectivity. In causative forms of the verbs, different realisation patterns are observed in relation with the shape of causativizer. These divergent structures were also accounted for by taking into consideration the internal features of the predicates and their lexical aspectual properties beside the form of causativisation.

CHAPTER 5

CONCLUSION

5.1 Summary of the claims and findings

This thesis investigated the morpho-syntactic and semantic features of the Thematic Suffixes in Şavşat Georgian which is a non-literary dialect of Georgian language spoken in Turkey. The aim was to examine the distribution of the different realisations of the Thematic Suffixes and to provide a descriptive analysis on how they interact with Aspect and argument structure.

Chapter 1 introduced the morphological and syntactic features of Şavşat Georgian on which there is no previous study. These include basics of nominal and verbal morphology, Georgian verb classes, *series* and *screeve* formation of the language and case paradigm.

Chapter 2 provided a comprehensive review of Georgian literature targeting Thematic Suffixes. Both traditional Georgian grammars and more recent studies were covered to understand the function of the Thematic Suffixes in the language which mostly relate these suffixes with Aspect.

Chapter 3 examined the different realisations of TS in Şavşat Georgian namely -*eb*, -*ob*, -*ev* and –*ev* and discussed their relation to grammatical aspect, lexical aspect and argument structure. It was demonstrated that the presence of TS marks imperfectivity in the language. Besides, different realisations of TS denote different lexical aspectual classes. The picture is as follows: The suffix -*ob* indicates state verbs while the language

employs -*av* for activity verbs. The suffix -*ev* is the marker for two-phase achievement verbs accompanied with valency marker *a*-and the suffix -*eb* denotes change of states.

Lastly, Chapter 4 discussed the syntactic representation of the Thematic Suffixes considering the dynamics of causative structures which always occur with TS -*eb*. Following the literature, it was suggested that there are two head positions which host Thematic Suffixes; lower one is Inner Aspect head and higher one is Event head. The basic mechanism is as follows: TS is base generated in Inner Aspect head to show the aspectual classes of the verb accordingly and then it moves to Event head to check imperfectivity. Causative structures yield diversity since they include Voice layer which may affect the presence of TS.

5.2 Suggestions for future research

In this thesis, we focused on the Thematic Suffixes which occupy a modest place among excessive Georgian verbal morphology. Since Şavşat dialect is studied for the first time in the literature, the primary issue is a holistic description of this dialect for which we did not have enough time within the preparation process of the current thesis. Keeping this prerequisite in mind, we will briefly mention some of the issues that we believe need further research.

First, the formal features of future conjugation needs to be studied since Şavşat Georgian displays a completely different case paradigm (Ergative-Absolutive) and verbal morphology in future tense compared to the standard dialect. It seems possible that the findings of this study can raise important questions about the interaction between perfective aspect and ergativity which draws attention cross-linguistically.

Second, as discussed in Chapter 4, Şavşat Georgian computes event structure in two distinct heads namely Event and Inner Aspect. We are aware from our data that the Thematic Suffixes can occur in masdar forms. In line with this, we can claim that nominalisation happens above the Inner Aspect head in Şavşat Georgian. However, we need further data regarding the masdar form of causative structures thus nominalisation patterns of this dialect need to be studied holistically to figure out what is the extend of TS in Georgian nominalisations.

As the last remark, we want to touch upon the verb category which seems to fall between intransitive verbs and transitive verbs. As we can remember from the Chapter 3, fake unergatives appear with TS *-av* unlike other unergatives taking *-ob*. These verbs denote activity while standard unergatives denote states. Following Nash (2018), we categorize these verbs as fake unergatives since they display a more transitive like syntax and morphology in aorist. However, when we causativize them, they align with monovalent verbs structurally. Thus, this verb class needs to be studied in detail to understand their nature holistically.

Being the earliest study on Şavşat Georgian, we hope that this study will pave the way for further research on the dialects of Georgian which is spoken throughout Turkey and contribute to the linguistic theory both related to Aspect and also in general.

REFERENCES

Aranson, H. I. (1979). Towards a typology of transitivity: The strange case of the Georgian subject. In P. R. Clyne, W.F. Hanks & C. L. Hofbauer (Eds.). *The elements: A parasession on linguistic units and levels.* (pp. 297-306). Chicago, IL: Chicago Linguistic Society.

Aranson, H. I. (1990). *Georgian a reading grammar*. Bloomington, IN: Slavica Publishers.

Campbell, L. (2013). *Georgian verbs comprehensive.* UCL. Retrieved from https://issuu.com/terrazi/docs/g__rc__ce_fiiller_geni___kapsaml__-

Çiloğlu, F. (1993). *Gürcülerin tarihi.* İstanbul, Turkey: Ant Yayınları.

Dowty, D. (1979). *Word meaning and Montague grammar.* Dordrecht, Netherlands: Springer.

Filip, H. (2012). Lexical aspect. In R. I. Binnick (Ed.). *The Oxford handbook of tense and aspect.* Oxford, England: Oxford University Press.

Flinn, G. (2017). Georgian stem formants and nominalization. In P. Farrell (Ed.), 2017 Proceedings of the Linguistic Society of America (pp. 1-13). Washington, DC: Linguistic Society of America. Retrieved from http://journals.linguisticsociety.org/proceedings/index.php/PLSA/article/view/4092/3787

Gigineishvili, I., Topuria, V. & Kavtaradze, I. (1961). *kartuli dialekt'ologia I* (Georgian dialectology, I). Tbilisi, Georgia: Tbilisi State University Press.

Hale, K. & Keyser, S. J. (2002). *Prolegomenon to a theory of argument structure.* Cambridge, MA: MIT Press.

Harley, H. (1995). *Subjects, event and licensing*. (Unpublished doctoral dissertation). MIT, Cambridge, MA.

Harley, H. (2017). The “bundling” hypothesis and the disparate functions of little v. In R. D’Alessandro, I. Franco & A. Gallego (Eds.). *The verbal domain*. (pp. 3-28). Oxford, England: Oxford University Press.

Hewitt, B. G. (1995). *Georgian a structural reference grammar.* London, England: Routledge.

Hewitt, B. G. (1996). *Georgian: A learner’s grammar.* Philadelphia, PA: John Benjamins Publishing Company.

Key, G. (2013). *The morphosyntax of Turkish causative construction.* (Unpublished doctoral dissertation). University of Arizona, Tucson, AZ.

Lomashvili, L. (2010). *Morphosyntax of complex predicates in South Caucasian languages.* (Unpublished doctoral dissertation). The University of Arizona, Tucson, AZ.

Lyle, J. (1997). *Aspects of ergativity.* (Unpublished doctoral dissertation). University of Washington, Seattle, WA.

Makharoblizde, T. (2012). *The Georgian verb.* Munich, Germany: LINCOM: Studies in Caucasian Linguistics.

Nash, L. (1995). *Portée argumentale et marquage casuel dans les langues SOV et dans les langues ergatives: L'exemple du géorgien*. (Unpublished doctoral dissertation). University of Vincennes, Paris, France.

Nash, L. (2017). The structural source of split ergativity and ergative case in Georgian. In J. Coon, D. Massam, & L. D. Travis (Eds.). *The Oxford handbook of ergativity* (pp. 175-204). Oxford, England: Oxford University Press.

Nash, L. (2018). Nonunitary structure of unergative verbs: From monovalent statives to bivalent reflexive causatives in Georgian. Unpublished manuscript.

Öztürk, B. & Taylan, E. (2014). Transitivity in Pazar Laz. *Acta Linguistica Hungarica*. 61(3), 271-296.

Öztürk, B. & Taylan, E. (2017). Omnipresent little vP in Pazar Laz. In R. D'Alessandro, I. Franco & A. Gallego (Eds.). *The verbal domain*. (pp. 207-231). Oxford, England: Oxford University Press.

Travis, L. D. (2010). *Inner aspect: The articulation of VP*. Dordrecht, Netherlands: Springer.

Tuite, K. (1989). The geography of Georgian q'e. In H. Aranson (Ed.). *The non-Slavic languages of the USSR: Linguistic studies.* (pp. 283-302). Chicago, IL: Chicago Linguistic Society. Retrieved from https://www.webdepot.umontreal.ca/Usagers/tuitekj/MonDepotPublic/publications.htm

Tunçel, H. (2000). Türkiye'de ismi değiştirilen köyler. *Fırat Üniversitesi Sosyal Bilimler Dergisi.* 10(2), 23-34.

Vendler, Z. (1967). Verbs and times. *The Philosophical Review*. 66(2), 143-160.

APPENDIX

ŞAVŞAT GEORGIAN CONJUGATED VERB LIST

Verb	Masdar	Masdar SG	Past	Past SG	TS	Continuous	Continuous SG	Future	Future SG
beautify oneself	şeqazma	gamoprançva	şeyqazma	gamoiprança	av	iqazmavs	iprançeba	şeyqazmonas	gamoiprançeba
boil	moxarşva	moxarşva	moxarşa	moxarşa	av	xarşavs	xarşavs	moxarşonas	moxarşavs
brush	gapurça	gaxexva	geypurça	gaixexa	av	ipurçavs	ixexavs	geypurços	gaixexavs
carry	zidva	tareba	zida	atara	av	zidavs	atarebs	zidonas	atarebs
choke	moglarçoba	dahçoba	moglarça	daahço	av	glarçavs	ahçobs	moglarçonas	daahçobs
clip, cut	gagknaça	gagkreçva	gagknaça	gagkriça	av	gknaçavs	kriçavs	gagknaçonas	gakriçavs
comb oneself	-	vartsna	deybartsxna	daivartsxna	av	ibartsxnavs	ivartsxnis	deybartsxnonas	daivartsxnis
consult	daqitha	azris qitxva	qitxa	azri iqitxa	av	qitxavs	azrs qitxulobs	qithonas	azr iqitxavs
cough	daqveleba	xveleba	deiqvela	daaxvela	av	qvelavs	axvelebs	deiqvelonas	daaxvelebs
crawl	boçva	hohva	iboça	ihoha	av	boçavs	hohavs	iboçonas	ihohebs

crush	gaçckleta	gaçkleta	gaçcklita	gaçklita	av	çckletavs	çklitavs	gaçcklitonas	gaçklitavs
dismantle	amogleca	amogleca	amoglica	amoglica	av	glecavs	glecs	amogliconas	amoglecs
draw	gaçizgva	xat'va	gaçizga	daxata	av	çizgavs	xatavs	gaçizgonas	daxatavs
dress	çadsma	çatsma	çeydsua	çaitsva	av	idsuavs	itsvams	çeydsuanas	çaitsvams
drink	sma	sma	svaa	dalia	av	svavs	svams	svaanas	dalevs
drip	tsveteba	tsvetva	deytsveta	itsveta	av	tsvetavs	tsvetavs	deytsvetonas	itsvetebs
erase	gasilgva	gatsmenda	gasilga	gatsminda	av	silgavs	tsmindavs	gasilgonas	gatsmindavs
fold	moqetsva	daketsva	moqetsa	daketsa	av	qetsavs	ketsavs	moqetsonas	dakatetsavs
freeze	gaqinva	gaqinva	gaqina	gaiqina	av	qnavs	iqineba	gaqinonas	gaiqineba
give birth	dasma	bavşvis gaçena	dasva	gaaçina	av	garç svavs	açens	dasvanas	gaaçens
gnaw	gaxroba	gamoxvra	gaxra	gamoxra	av	xravs	xravs	gaxranas	gamoxravs
knead	mozela	mozela	mozila	mozila	av	zelavs	zelavs	mozilonas	mozelavs
knot	gaqoça	gaqoçva	gaqoça	gaqoça	av	qoçavs	qoçavs	gaqoçonas	gaqoçavs
listen to	dadingla	mosmena	duudingla	moismina	av	udinglavs	ismens	duudinglonas	moismens

nudge	cgunta	çqmeta	micgunta	uçqmita	av	cguntavs	çqmetavs	micguntonas	uçqmets
paint	şeğeba	şeğebva	şeğeba	şeğeba	av	ğebavs	ğebavs	şeğebonas	şeğebavs
plant	dargoba	dargva	dargo	dargo	av	rgavs	rgavs	dargonas	dargavs
plough	moqna	moxvna	moqna	moxna	av	qnavs	xnavs	moqnanas	maxnavs
pluck	motskveta	motskveta	motskvita	motskvita	av	tskvitavs	tskvitavs	motskvitonas	motskvitavs
pray	dalotsa		dalotsa		av	lotsavs		dalotsonas	
prune	daroqna	gakreçva	daroqna	gakriça	av	reqavs	kriçavs	dareqnonas	gakriçavs
ring, toll	dakra		duukra	duukra	av	ukravs	ukravs	duukranas	
roast	mohrakoba	mohrakva	mohraka	mohraka	av	hrakavs	hrakavs	mohrakonas	mohrakavs
roll	gagoreba	dagoreba	gagorda	dagorda	av	goravs	gordeba	gagordenas	dagordeba
run		sirbili	içena	irbina	av	çenavs	mirvis/darbis	içenonas	irbens
sew	dakereba	kerva	dakera	şekera	av	keravs	keravs	dakeronas	şekeravs
smooth over	mosma	tsasma	muusva	tautsva	av	usvavs	usvams	tsuusvanas	tausvams
swallow	çaklapa	gadaglapva	çaklapa	gadaklapa	av	klapavs	klapavs	çaklaponas	gadaklapavs

swim	tsurva	tsurva	itsura	itsurava	av	tsuravs	tsuravs	itsuronas	itsuravebs
tear	gapretsa	gaxeva	gapritsa	gaxia	av	prtsavs	xevs	gaprtsonas	gaxevs
tie, attach	dabma	dabma	daaba	daaba	av	abavs	abams	daabanas	daabams
tread	gaqelva		gaqela		av	qelavs		gaqelonas	
write	datserva	tsera	datsera	datsera	av	tseravs	tsers	datseronas	datsers
approach	moxloveba	daaxloveba	maaxlovda	daaxlovda	eb	axlovdeba	axlovdeba	maaxlovdenas	daaxlovdeba
bake	gamotsxoba	gamotsxoba	gamaatsxo	gamoatsxo	eb	atsxebs.	atsxobs	gamaatsxonas	gamoatsxobs
bath	gabaneba	dabana	geebana	daibana	eb	ebaneba	ibans	geebanonas	daibans
beat for sound	mokakuneba	dakakuneba	mukakuna	daakakuna	eb	ukakunebs	akakunebs	mukakunonas	daakakunebs
blow up	gasiveba	gaberva	gaasiva	gabera	eb	adivebs	beravs	gaasionas	geberavs
boil	aduğeba	aduğeba	aaduğa	aaduğa	eb	aduğebs	aduğebs	aaduğonas	aaduğebs
build	aşeneba	aşeneba	aaşena	aaşena	eb	aşenebs	aşenebs	aaşenonas	aaşenebs
call	dazahna	dazaxeba	dudzaha	daudzaxa	eb	uzahebs	edzaxis	duzahonas	daudzaxebs
cheer	gaşenligeba	gamxiaruleba	gaaşenliga	gamxiarula	eb	aşenligebs	amxiarulebs	gaaşenligonas	gamxiarulebs

clean	gasupteba	dasuptaveba	gaasupta	daasuptava	eb	asuptebs	asuptavebs	gaasuptonas	daasuptavebs
climb	aqvançxeba	moçideba	eeqvançxa	moeçida	eb	eqvançxeba	eçideba	eqvançxonas	moeçideba
close	dakapaneba	dak'et'va	daakapana	daketa	eb	akapanebs	ketavs	daakapanonas	daketavs
coagulate	gasqeleba	şesqeleba	gasqelda	şesqelda	eb	sqeldeba	sqeldeba	gasqeldenas	şesqeldeba
cook		gamotsxoba	gamotsxa	gamotsxa	eb	tsxveba	tsxveba	gamotsxenas	gamotsxveba
crack	gadstqdoma	gabzarva	gadstqda	gaibzara	eb	dstqdeba	ibzareba	gadstqdenas	gaibzareba
curdle	açroma	açra	eyçra	aiçra	eb	içreba	içreba	eyçranas	aiçreba
decay	daçuruğeba		daçuruğda		eb	çuruğdeba		daçuruğdenas	
decrease			datsot’avda		eb	tsot’avdeba		daatsot’avdenas	
descend	dadableba	dadableba	dadablda	dadablda	eb	bdaldeba	dabldeba	dadabldenas	dadabldeba
die	moqdoma	sikvdili	moqda	moqvda	eb	qdeba	qvdeba	moqdenas	moqvdeba
drop	çamogdeba	davardna	çaagdo	davarda	eb	agdebs	vardeba	çaagdonas	davardeba
enlarge	gagenişeba	gapartoveba	gagenişda	gapartovda	eb	genişdeba	partovdeba	gagenişdenas	gapartovdeba
enlarge sth	gagenişeba	gapartoveba	gaagenişa	gaapartova	eb	ageşinebs	apartovebs	gaagenişonas	gaapartovebs

faint	dabneda	gulis tsasvla	dabnda	guli tsauvida	eb	bndeba	guli misdis	dabndenas	gali tsauva
finish	gataveba	damtavreba	gatavda	damtavrda	eb	tavdeba	mtavrdeba	gatavdenas	damtavrdeba
finish sth	gataveba	damtavreba	gaatava	daamtavra	eb	atavebs	amtavrebs	gaataonas	daamtavrebs
flash	gayelveba	gaelveba	geyvela	gaielva	eb	iyelvebs	elavs	geyvelonas	gaielvebs
gather	moqriloba	mogroveba	meyqara	moagraba	eb	iqreba	agrovebs	meyqaronas	moagrovebs
get beautiful	galamazabe	galamazabe	galamazda	galamazda	eb	lamazdeba	lamazdeba	galamazdenas	galamazdeba
get black	gaşaveba	gaşaveba	gaşavda	gaşavda	eb	şavdeba	şavdeba	gaşavdenas	gaşavdeba
get cold	gatsiveba	gatsiveba	gatsivda	gatsivda	eb	tsivdeba	tsivdeba	gatsivdenas	gatsivdeba
get dark	dableneba		dablenda		eb	blendeba		dablendenas	
get dry	gakmoba	gaxmoba	gakma	gaxma	eb	kmeba	xmeba	gakmenas	gaxmeba
get evening	dağameba	mosağamoveba	dağamda	mosağamovda	eb	ğamdeba	sağamovdeba	dağamdenas	mosağamovdeba
get fat	gasuqeba	gasuqeba	gasuqda	gasuqda	eb	suqdeba	suqdeba	gasuqdenas	gasuqdeba
get full	gazğoma	gadzğoma	gazğa	gadzğa	eb	zğeba	dzğeba	gazğenas	gadzğeba
get numb	dabujeba	dabujeba	dabujda	dabujda	eb	bujdeba	bujdeba	dabujdenas	dabujdeba

get old	dazveleba	dazveleba	dazvelda	dazvelda	eb	zveldeba	zveldeba	dazveldenas	dazveldeba
get old	dabereba	dabereba	daberda	daberda	eb	berdeba	berdeba	daberdenas	daberdeba
get on	secdoma	dacdoma	secda	dacda	eb	cdeba	cdeba	secdes	dacdeba
get red	gatsiltleba	gatsiltleba	gatsiltda	gatsiltda	eb	tsiltdeba	tsiltdeba	gatsiltdenas	gatsiltdeba
get rid of	morçoma	gadarçena	morça	gadarça	eb	rçeba	rçeba	morçenas	gadarçeba
get small, shrink	gapatsaveba	dapatareveba	gapatsavda	dapataravda	eb	patsavdeba	pataravdeba	gapatsavdenas	dapataravdeba
get sour	damcaveba	damjaveba	damcavda	damjavda	eb	cavdeba	mjavdeba	damcavdenas	damjavdeba
get ugly	gabeteba	damaxinceba	gabetda	damaxincda	eb	betdeba	maxincdeba	gabetdenas	damaxincdeba
get warm	gatboba	gatboba	gatba	gatba	eb	tbeba	tbeba	gatbenas	gatbeba
get watery	gatxeleba	gatxeleba	gatxelda	gatxelda	eb	txeldeba	txeldeba	gatxeldenas	gatxeldeba
get wet	dasveleba	dasveleba	dasvelda	dasvelda	eb	sveldeba	sveldeba	dasveldenas	dasveldeba
get white	gatetreba	gaçağaraveba	gatetrda	gaçağaravda	eb	tetrdeba	çağaravdeba	gatetrdenas	gaçağaravdeba
get yellow	gaqvitleba	qaxuneba	gaaqvitla	gaxunda	eb	aqvitlebs	xundeba	gaaqvitlonas	gaxundeba
hit	moxdoma	dartkma	moxda	daartka	eb	xudeba	artkams	moxdenas	daartkams

hold	daçira	daçera	deyçira	daiçira	eb	içirebs	içers	deyçironas	daiçers
increase	damat’eba	damat’eba	duumata	daumata	eb	umat’ebs	umat’ebs	duumat’onas	daumatebs
insert, sting	şegdeba	şegdeba	şiagdo	şiagdo	eb	agdebs	agdebs	şiagdonas	şeagdebs
lay	dageba	dageba	daago	daago	eb	agebs	agebs	daagonas	daagebs
look	qureba	qureba	uqura	uqura	eb	uqurebs	uqurebs	uquronas	şexedavs
make, do	gaqeteba	gaqeteba	gaaqeta	gaaqete	eb	aqetebs	aqetebs	gaaqetonas	gaaqetebs
melt	gadnoba	dadnoba	gadna	dadna	eb	dneba	dneba	gadnenas	dadneba
miss	mosureba	monatreba	mosurda	moenatra	eb	surdeba	enatreba	mosurdenas	moenatreba
mould	amşmoreba	daobeba	amşmorda	daobda	eb	şmordeba	obdeba	amşmordenas	daobdeba
move away	gaşoreba	daşoreba	gaşorda	daşorda	eb	şordeba	şordeba	gaşordenas	daşordeba
open	gağeba	gağeba	gağo	gağo	eb	ağebs	ağebs	gağonas	gaağebs
patch	moqereba	k'erva	maaqera		eb	aqerebs		maaqeronas	
pop	gaskdoma	gaskdoma	gaskda	gaskda	eb	sqdeba	skdeba	gaskdenas	gaskdeba
press	datsola	daçera	daatsuva	daaçira	eb	atsveba	açers	daatsonas	daaçers

pull	datsekna	gamotseva	deetsika	gamotsia	eb	etsikeba	tsevs	deetsikonas	gamotsevs
put, place	dadeba	dadeba	dadva	dado	eb	debs	debs	dadvanas	dedebs
putrefy	dalpoba	dalpoba	dalpa	dalpa	eb	lpeba	lpeba	dalpenas	dalpeba
reach	gatsdoma	mitsdoma	gatsda	mitsda	eb	tsdeba	tsdeba	gatsdenas	mitsdeba
realize	daqvireba	şemçneva	daqvirda	şeamçnia	eb	qvirdeba	amçnevs	daqvirdenas	şiamçnevs
recover	gaqeteba	gamocanmrtelebo	gaqetda	gamocanmrtelda	eb	qetdeba	canmrteldeba	gaqetdenas	gamocanmrteldeba
reduce	datsot’aveba	şemsireba	daatsot’ava	şiamsria	eb	atsot’avebs	amsirebs	daatsot’avonas	şiamsirebs
rejoice	gaxareba	gaxareba	guuxarda	gauxarda	eb	ixarebs	uxaria	geyxaronas	gauxardeba
rend	gapretsa	daxeva	gapritsda	daixa	eb	iprtseba	ixeva	geyprtsonas	daixeva
reproduce	gabevreba	gamravleba	gabevrda	gamravlda	eb	bevrdeba	mravldeba	gabevrdenas	gamravldeba
resemble	damguazeba	damgvaneba	demguaza	daagvana	eb	emguazeba	emgvaneba	demguazonas	daemgvaneba
rise	amağleba	amağleba	amağlda	amağlda	eb	mağldeba	mağldeba	amağldenas	amağldeba
roll sth	gagoreba	dagoreba	gaagora	dagorda	eb	agorebs	goravs	gaagoronas	dagordeba
scab	moqoxeba	moşuşeba	moqoxda	moşuşda	eb	qoxdeba	şuşdeba	moqoxdenas	moşuşdeba

show	danaxveba	çveneba	daanaxva	açvena	eb	anaxvebs	açvenebs	daanaxonas	açvenebs
start	datsqeba	dats'qeba	deytsqo	daitsqo	eb	itsqebs	itsqebs	deytsqonas	daitsqebs
straiten	gamitsroveba	davitsroveba	gaamitsroa	daavitsrova	eb	amitsrovebs	avitsrovebs	gaamitsronas	daavitsrovebs
swell	gazdoma	gadideba	geyzda	gadidda	eb	izdeba	diddeba	geyzdenas	gadiddeba
swell	gasiveba	gaberva	gasivda	gibera	eb	sivdeba	ibereba	gasivdenas	gasivdeba
swing	gakaneba	kanaoba	geekana	ikanava	eb	ekaneba	kanaobs	geekanonas	ikanavebs
swing sth	gakaneba	gakaneba	gaakana	gaakana	eb	akanebs	akanavebs	gaakanonas	gaakanavebs
tan	gabratseba	şebratsva	gabratsda	şeibratsa	eb	bratsdeba	ibratseva	gabratsdenas	şeibratseva
touch	tsaqareba	şexeba	tseeqara	şeexo	eb	ekareba	exeba	tseeqarunas	şeexeba
turn	dabruneba	triali	abruna	itriala	eb	abrunebs	trialebs	daabrununas	daatrialebs
understand	gagneba	gageba	geygna	gaigo	eb	ignebs	igebs	geygnanas	gaigebs
wane	gap’areba	daçuteba	gap’arda	daiçuta	eb	p’ardeba	içuteba	gap’ardenas	daiçuteba
wane sth	gap’areba	çakroba	gaap’ara	çaakro	eb	ap’arebs	akrobs	gaap’aronas	çaakrobs
wink	dapasquneba	çapaçuneba	duupasquna	çaapaçuna	eb	upasqunebs	apaçunebs	duupasqunonas	daapaçunebs

beat, defeat	morevna	moreva	meeria	moeria	ev	ereva	ereva	meerionas	moereva
contaminate	şexvevna	gadadeba	şeexviya	gadaedo	ev	exveva	edeba	şeexvionas	gadaedeba
demolish	dangrevna	dangreva	daangriya	daangria	ev	angrevs	angrevs	daangrionas	daangrevs
drag	gatrevna	gatreva	gaatriya	gaatria	ev	atrevs	atrevs	gaatrionas	gaatrevs
fit	datevna	dateva	deetia	daetia	ev	eteva	eteva	deetionas	daeteva
lift	adsevna	atseva	adsia	atsia	ev	dsevs	tsevs	adsionas	atsebs
make sb escape	gaktsevna	gatsdena	gaaktsia	gaatsdina	ev	aktsevs	atsdens	gaaktsionas	gaatsdens
pour, spill	daktsevna	daktseva	daaktsiya	daaktsia	ev	aktsevs	aktsevs	daaktsionas	daaktsevs
throw	gaknevna	gadagdeba	geykniya	gadaagdo	ev	iknevs	agdebs	geyknionas	gadaagdebs
baa	dabğavleba	dabğavleba	deybğavla	daibğavla	none	bğavis	bğavis	deybğavlonas	daibğavlebs
bark	daqepeba	qepa	deyqepa	daiqepa	none	qeps	qeps	deyqeponas	daiqepebs
be born	dabadeba	dabadeba	deybada	daibada	none	ibadis	ibadeba	deybadonas	daibadeba
be seen	danaxva	danaxva	deenaxa	dainaxa	none	enaxvis	xedavs	deenaxonas	dainaxavs
bend		moxra	meyqaqva	moixara	none	iqaqvis	ixreba	meyqaqonas	moixreba

bite	qbena	qbena	uqbina	uuqbina	none	qbens	qbens	uqbinonas	uuqbens
blossom	gamokra	gapurçkvna	gameykara	gaipurçkna	none	ikris	ipurçkneba	gameykaronas	gaipurçkneba
boil	aduğeba	aduğeba	aduğda	aduğda	none	duğs	duğs	aduğdenas	aduğdeba
burn		danteba	deitsa		none	itsvis		deits	
change	gamotsvla	gamotsvla	gameytsvla	gamoitsvala	none	itsvlis	itsvleba	gameytsvalonas	gamoitsvleba
change sth	gadsula	şetsvla	gadsula	şetsvala	none	dsulis	tsvlis	gadsulonas	şetsvlis
chew	gatsohna	ğeçva	gatsohna	dağeça	none	tsohnis	ğeçavs	gatsohnonas	dağeçavs
collect	mokrepa	mokrepa	mokripa	mokripa	none	kreps	kreps	mokriponas	mokreps
crow	daqivleba	daqivleba	deyqivla	daiqivla	none	qivis	qivis	deyqivlonas	daiqivlebs
cry	tirili	tirili	itira	itira	none	tiris	tiris	itironas	itirebs
cut	gaçra	daç'ra	gaçra	gaçra	none	çris	çris	gaçranas	daçris
dig	motxra	amotxra	motxara	amotxara	none	txiris	txris	motxaronas	amotxris
disappear	dakarqna	dakargva	deykarqa	daikarga	none	ikarqvis	ikargeba	deykarqonas	daikargeba
discover	gamoçena	ağmoçena	gamaaçina	ağmoaçina	none	açens	açens	gamaaçinonas	ağmoaçens

eat	çama	ç'ama	çama	çama	none	çams	çams	çamonas	şeçams
effervesce	akapva	akapeva	eykapa	akapda	none	ikapis	ikapeba	eykaponas	akapdeba
empty	datsla		datsala		none	tsilis		datsalonas	
enter	şesula	şesvla	şevda	şevida	none	şedis		şevdenas	şeva
exist, have	kavs	qola	kavda	qavda	none	kavs	qavs	kavdenas	eqoleba
fade	peri tsaxla	dacqnoba	tsovda	dacqna	none	tsadis	cqneba	tsuudenas	dacqneba
flow	çamodena	çamodineba	çamodinda	çamoedina	none	dis	edineba	çamodindenas	çamoedineba
get out	gamosula	gamosvla	gamevda	gamovida	none	modis	gamodis	gamevdenas	gamova
hang	dakida	dakideba	dakida	dakida	none	kidis	kidebs	dakidonas	dakidebs
hate	şezulveba	sidzulvili	şezulda	şesdzulda	none	zuls	sdzuls	şezuldenas	şedzuldeba
kiss	qotsna	qotsna	oqotsa	aqotsa	none	qotsnis	qotsnis	aqotsonas	aqotsebs
know	tsodna	tsodna	itsoda	itsoda	none	itsis	itsis	itsodenas	etsodineba
laugh	sitsili	sitsili	geytsina	gaitsina	none	itsinis	itsinis	geytsinonas	gaitsinebs
learn	datsavla	tsavla	deytsavla	itsavla	none	itsavlis	tsavlobs	deytsavlonas	itsavlis

lose hair	tma gakra	tmis tsvena	gakara	gastsivda	none	gris	stsiva	gakaronas	gastsivdeba
love	şeqvareba	sqvaruli	şuuqvarda	şeuqvarda	none	uqvars	uqvars	şuuqvardenas	şeuqvardeba
make sb eat, feed	çmevneba	çmeva	açama	açama	none	açams	açmevs	açamonas	şeaçmevs
scatter	dapantva	dapantva	deypanta	daipanta	none	ipantvis	ipanteba	deypantonas	daipanteba
scream	kvirili	kvirili	deykvira	daikvira	none	kviris	kviris	deykvironas	daikvirebs
search	zebna	dzebna	mozebna	modzebna	none	zebnis	edzebs	zebnonas	modzebnis
send	gzavna	gaksavna	gagzavna	gagzavna	none	gzavnis	gzavnis	gaagzavnonas	gagzavnis
set down	çasvla	çasvla	çevda	çavida	none	çadis	çadis	çevdenas	çava
shoot	sıra	sırola	esrola	esrola	none	sris	esvris	esrolonas	esvris
smell	amquroleba	dasunva	amqurolda	dasuna	none	qars	sunavs	amquroldenas	dasunavs
solve	amotsxna	amosxna	amotsxna	amosxna	none	tsxinis	xsinis	amotsxnanas	amoxsinis
stay	darçoma	darçena	darça	darça	none	çeba	rçeba	darçenas	darçeba
sulk	gabuka	gabudva	geybuka	gaibuda	none	ibukis	ibudeba	geybukonas	gaibudeba
sweep	dagva	dagva	dagava	dagava	none	gvis	gvis	dagavonas	gagvis

swell	aparqva		eyparqa		none	iparqvis		eyparqonas	
teach	datsavleba	stsavleba	daatsavla	atsavla	none	atsavlis	atsavlis	daatsavlonas	şeatsavlis
thunder	daquxeba	daquxeba	deyquxa	daiquxa	none	quxs	quxs	deyquxonas	daiquxebs
untie	gasxna	gasxna	gasxna	gasxna	none	tsxinis	xsinis	gatsxnanas	gaxsinis
vegetate	amosla	amosla	amoyda	amovida	none	amodis	amodis	amoydenas	amova
wait	datsda	datsda	dutsada	dautsada	none	utsdis	itsdis	dutsadonas	moitsdis
wait		lodini		daeloda	none		elodeba		daelodeba
walk		siaruli	iara	iara	none	dava	dadis	iaronas	ivlis
wash	gartsxoma	garetsxva	gartsxa	garetsxa	none	tsxis	retsxavs	gartsxonas	garetsxavs
whistle	dabşt’uena	stvena	daabşt’uina	daustvina	none	ubştuens	ustvens	dubşt’uinonas	daustvens
wrinkle	daprançuleba	daquçva	deyprança	daiquça	none	iprançis	iquçeba	deyprançonas	daiquçeba
be angry	gahersiyaneba	gabrazeba	gahersiyanda	gabrazda	ob	hersiyanobs	brazdeba	gahersiyandenas	gabrazdeba
bear, tolerate	gazloba	gazleba	guuzlo	gauzlo	ob	uzlobs	uzlebs	guuzlonas	gauzlebs
boil down	moqloba	moqleba	muuqlo	moaqlo	ob	uqlobs	aqlebs	muuqlonas	moaqlebs

calculate	muhesabeba	angarişi	meyhesaba	iangarişa	ob	hesabobs	angarişobs	meyhesabonas	iangarişebs
dance	sama	tsek'va	iman isama	itsekva	ob	samobs	tsekvavs	isamonas	itsekvebs
divide	gaqopa	qaqopa	gaqo	gaqo	ob	qobs	qobs	gaqonas	gaqobs
dry sth	gakmoba	gaşroba	gaakmo	gaaşro	ob	akmobs	aşrobs	gaakmonas	gaaşrobs
feel	mixdoma	şegrdzneba	mixdva	igrdzno	ob	xdomilobs	grdznobs	mixdenas	igrdznobs
feel pity	şetsodeba	şetsodeba	şeytsoda	şeetsoda	ob	itsodobs	etsodeba	şeytsodonas	şeetsodeba
feel sorrow	tsqna	tsqena	etsqina	etsqina	ob	tsqenulobs	tsqnis	etsqninonas	etsqineba
fill	avsoba	avseba	avso	aavso	ob	avsobs	avsebs	avsonas	gaavsebs
flicker, fire	antoba	anteba	ento	ainto	ob	entoba	enteba	entonas	ainteba
forbear	sabroba	motmena	isabra	moitmina	ob	sabrobs	itmens	isabronas	moitmens
forget	davitsqneba	davitsqeba	daavitsqda	daavitsqda	ob	avitsqdoba	avitsqdeba	daavitsqonas	daavitsqdeba
give up	dapişmaneba	uaris tsqma	dapişmanda	uari tqva	ob	pişmnobs	uvars ambobs	dapişmandenas	uvars itqves
grumble	tirtili		itirtila		ob	tirtilobs		itirtilonas	
heat	gatboba	gatboba	gaatbo	gaatbo	ob	atbobs	atbobs	gaatbonas	gaatbobs

know	tsunoba	tsnoba	itsna	itsno	ob	tsnobilobs	tsnobs	itsnonas	itsnobs
light	ganatleba	ganateba	ganatlda	ganatda	ob	natelobs	natdeba	ganatldenas	ganatdeba
live	sitsotsxle	sxovreba	itsotsxla	itsxovra	ob	tsotsxlobs	tsxovrobs	itsotsxlonas	itsxovrebs
melt sth	gadnoba	dadnoba	gaadno	daadno	ob	adnobs	adnobs	gaadnonas	daadnobs
monitor	datsoba	dakvirveba	datso	daakvirda	ob	tsobs	akvirdeba	datsonas	daakvirdeba
own	sahaboba	dapatroneba	sahabia	daepatrona	ob	sahabobs	epatroneba	isahabonas	daepatroneba
purl	daşxriyaloba	çxriali	deyşxriyala	içxriala	ob	şxriyalobs	çxrialebs	deyşxriyalonas	içxrialebs
read	kitxva	k'itxva	ikitxa	tsaikitxa	ob	kitxulobs	kitxulobs	ikitxonas	tsaikitxavs
remember	mogoneba	gahseneba	meygona	gaixsena	ob	igonobs	ixsenebs	meygononas	gaixsenebs
shine	qapkriyaleba	brçqviali	gapkriyalda	ibrçqviala	ob	pkriyalobs	brçqvialebs	gapkriyaldenas	ibrçqvialebs
shiver	qaqanqaleba	kankali	qaqanqalda	ikankala	ob	qanqalobs	kankalebs	qaqanqaldenas	ikankalebs
sing:	mğera	simğera	imğera	imğera	ob	mğerobs	mğeris	imğeronas	imğerebs
strike	datsxoba	dart'qma	datsxo	daartqa	ob	tsxobs	urtqams	datsxonas	daartqams
suffice	qopna	kopna	eqo	eko	ob	qopnulobs	kopnis	eqoponas	ekopa

talk	laparaki	laparaki	ilaparaka	ilaparaka	ob	laparakobs	laparakobs	ilaparakonas	ilaparakebs
think	dapikra	dapikreba	deypikra	dapikrda	ob	pikrobs	pikrobs	deypikronas	dapikrdeba
warble	daçikçikoba	çikçiki	deyçikçika	içikçika	ob	çikçikobs	çikçikebs	deyçikçikonas	içikçikebs
watch	seyroba	qureba	iseyra	uqura	ob	seyrobs	uqurebs	iseyronas	uqurebs
work	sakme	muşaoba	iman isakma	imuşava	ob	sakmobs	muşaobs	isakmonas	imuşavebs