UNIVERSITY OF GAZIANTEP
GRADUATE SCHOOL OF
NATURAL & APPLIED SCIENCES

CHARACTERISTICS OF FLOW THROUGH MULTI-CELL BOX CULVERT COMBINED WITH BROAD CRESTED WEIR

M.Sc. THESIS
IN
CIVIL ENGINEERING

BY
Hemn MOHAMMED
AUGUST 2013

Characteristics of Flow through Multi-cell Box Culvert Combined With Broad Crested Weir

M.Sc. Thesis
In
Civil Engineering
University of Gaziantep

Supervisor
Prof. Dr. Mustafa GÜNAL

By
Hemn MOHAMMED
August 2013

© 2013 [Hemn MOHAMMED]

T.C.
UNIVERSITY OF GAZİANTEP
GRADUATE SCHOOL OF
NATURAL & APPLIED SCIENCES
CIVIL ENGINEERING DEPARTMENT

Name of the thesis: Characteristics of Flow through Multi-cell Box Culvert Combined with Broad Crested Weir

Name of the student: Hemn MOHAMMED
Exam date: August, 2013

Approval of the Graduate School of Natural and Applied Sciences

Assoc. Prof. Dr. Metin BEDIR
Director

I certify that this thesis satisfies all the requirements as a thesis for the degree of Master of Science.

Prof. Dr. Mustafa GÜNAL
Head of Department

This is to certify that we have read this thesis and that in our opinion it is fully adequate, in scope and quality, as a thesis for the degree of Master of Science.

Prof. Dr. Mustafa GÜNAL
Supervisor

Examining Committee Members	Signature
Prof. Dr. Mustafa GÜNAL	
Assoc. Prof. Dr. Oğuzhan YILMAZ	
Assist. Prof. Dr. Nermin ŞARLAK	

I hereby declare that all information in this document has been obtained and presented in accordance with academic rules and ethical conduct. I also declare that, as required by these rules and conduct, I have fully cited and referenced all material and results that are not original to this work.

Hemn MOHAMMED

ABSTRACT

CHARACTERISTICS OF FLOW THROUGH MULTI-CELL BOX CULVERT COMBINED WITH BROAD CRESTED WEIR

MOHAMMED, Hemn
MSc Thesis in Civil Engineering
Supervisor: Prof. Dr. Mustafa GÜNAL, Co-Supervisor: Dr. Adil RAHEEM
August 2013, 84 Pages

This study contains experimentally investigation of the hydraulic characteristics of flow over a broad crested weir and through multi-cell box culverts and both simultaneously, also to identifying the effect of parameters, such as upstream head, length, culvert inlet shape, culvert internal dimension, weir crest height, weir side slope angle, weir width, on the performance of combined structures .And so, it is aimed observe the discharge coefficient (Cd) variation of the combined structure. Finally, the equations are derived to the flow rate estimation through the combined structure. For this purpose twelve (12) glass material models of combined broad crested weir and multi-cell box culvert was manufactured and tested in a laboratory flume. These models were divided into four groups based on the box culvert dimensions; each group consisting of three models.

The experiments were conducted in three stages, flow through the box culvert, flow over the broad crested weir, and flow through both the box culvert, and over the broad crested weir simultaneously.

Dimensional analysis was performed to get the dimensionless parameters that the discharge coefficient depends on. Discharge coefficient prediction equations as a function of the dimensionless terms were developed using (a) multivariable linear regression and (b) multivariable power regression.

Keywords: Broad-crested weir, Multi-cell, Box, culvert, coefficient of discharge, combined structure, physical model.

ÖZET

GENİŞ YÜZEYLİ SAVAK İLE KOMBİNE EDİLMİŞ ÇOK HÜCRELİ MENFEZ YAPISINDA OLUŞAN AKIM ÖZELLİKLERİ

MOHAMMED, Hemn
YükseklisansTezi, İnşaat Mühendisliği
Danışman: Prof. Dr. Mustafa GÜNAL,Yarmdici Danışman: Dr. Adil RAHEEM

Ağustos 2013, 84 Sayfa

Bu çalışma, çok hucreli menfez yolyuyla geniş yüzeyli savak yapısında oluşan akım karakteristiklerini deneysel olarak araştırmaktadır. Menba yüksekliği, menfez uzunluğu, menfez geometrisi, menfez iç yarıçapı, savak tepe yüksekliği, savak yan eğim açısı, savak genişliği gibi en etkili parametrelerin yapının performansı üzerindeki etkileri incelenmiştir. Bununla birlikte, yapının debi katsayısı (Cd)'nin değişiminin irdelenmesi hedeflenmektedir. Son olarak, yapı debisini tahmin eden denklemler elde edilmiştir. Bu amaçla, yapının 12 cam-modeli geliştirilerek bir laboratuvar kanalı içinde modellemeler yapılmıştır. Bu modeller, menfez boyutlarına bağlı olarak 4 gruba ayrılmıştır, her grupta 3 farklı model bulunmaktadır.

Deneysel çalışma üç aşamada gerçekleştirilmiştir: sadece menfez akımı, sadece geniş tepeli savak akımı, ve birleşik menfez-geniş tepeli savak akımı. Fiziksel değişkenler üzerinde boyut analizi yapılarak debi katsayısı üzerinde en etkili boyutsuz parametreler elde edilmiştir. Elde edilen bu boyutsuz parametrelere bağlı olarak, debi katsayısını tahmin eden denklemler (i) çoklu lineer regresyon ve (ii) çoklu üstel regresyonanalizi kullanılarakeldeedilmiştir.

Anahtar Kelimeler: Geniş tepeli savak, Çok hücreli, Kasa, menfez, deşarj katsayısı, kombine yapısı, fiziksel model.

Present to:

- First school…..My mother and father.
- Last love….Mother of my sweet girls Hevi and Hazhi.
- Whose learned me just a letter …My Doctors and teachers.
- Whose I got from them noble behaviors…..My friends.

ACKNOWLEDGMENTS

First, I would like to express my sincere gratitude to my supervisor Prof. Dr. Mustafa GÜNAL, who has supported me and encouraged me in every point of this dissertation and his guidance, helped me in all the time of research and writing of this thesis.

I wish to express my sincere appreciation and profound gratitude to co-supervisor, Assist. Prof. Dr. Adil RAHEEM, this person has provided me with the necessary assistance, suggestion, and immense knowledge that I will never forget.

This thesis may not have been possible without the guidance and the help of the many people. It is a pleasure to thank those who really supported me and have done very hard work to complete this writing.

Lastly, I offer my regards and blessings to my family and all of those who supported me in any respect during study, research and application in the process of this work.

LIST OF CONTENTS

Contents **Page**

ABSTRACT vi

ÖZET vii

ACKNOWLEDGMENTS ix

LIST OF CONTENTS x

LIST OF FIGURES xiii

LIST OF TABLES xv

LIST OFSYMBOLS xvi

CHAPTER 1 1

INTRODUCTION 1

1.1 General 1

1.2 Culverts 6

1.3 Weirs 8

1.4 Broad-Crest Weirs 9

1.4.1 Classification of Broad Crest Weirs 10

1.5 Objective of Study 11

CHAPTER 2 12

LITERATURE REVIEW 12

2.1 General 12

2.2 Reviews of Works Carried on Culverts 12

2.3 Reviews of Works Carried on Broad Crested Weir 14

2.4 Review of the Works Carried on Combined Flow 17

CHAPTER 3 20

THEOROTICAL ANALYSIS 20

3.1 General 20

3.2 Flow Thought the Culvert 20

3.3 Flow over the Broad Crested Weir 23

3.4 Combined Structure Flow 26

3.5 Dimensional Analysis 28

CHAPTER 4 33

EXPERIMENTAL SETUP AND METHODOLOGY 33

4.1 General 33

4.2 Experimental Setup 33

4.2.1 The Flume 33

4.2.2 The Overhead Tank 36

4.2.3 The V-notch weir 37

4.2.4 The Measuring Tank 38

4.2.5 Point Gages for Depth Measurement 40

4.3 Construction of the Models 41

4.4 Testing Procedure 43

CHAPTER 5 44

DATA ANALYSIS AND DISCUSSION OF RESULTS 44

5.1 General 44

5.2 Head - Discharge Relations 44

5.3 Effect of Weir Height (P) 48

5.4 Effect of the Side Slope (θ) 50

5.5 Effect of the Culvert Dimension (D) 51

5.6 Correlations for Discharge Coefficient (Cd) 53

5.6.1 Discharge Coefficient Regressions for the Culvert 53

5.6.2 Discharge Coefficient (Cd) for the Broad Crested Weir 54

5.6.3 Discharge Coefficient (Cd) for the Combined Structure 55

CHAPTER 6.....

CONCLUSIONS AND RECOMMENDATIONS 62

6.1 General 62

6.2 Conclusions 62

6.3 Recommendations for further Investigations 64

REFERENCES 65

APPENDICES 68

Appendix A: Sample of Calculation 69

Appendix B: Measured Data and Calculated Results. 71

LIST OF FIGURES

Figure 1.1 River system orders 2

Figure 1.2 Image of roadway culverts during normal stream flow 4

Figure 1.3 Image of roadway culverts during floods 5

Figure 1.4 Types of culvert flow (Chow 1959) 7

Figure 1.5 Broad crested weir (Bos, 1976) 9

Figure 1.6 Flow types of broad crested weir 11

Figure 2.1 Profile of the flume used by Ehab A. Meselhe and Kirby Hebert(2003), showing locations of the water level sensors. 13

Figure 2.2 Steady free flow experiment (Upstream head versus discharge) tests by Ehab A. Meselhe and Kirby Hebert(2003) 14

Figure 2.3 Definition sketch for simultaneous flow through box culvert and over the contracted broad crested weir tested by Abdul Azim M. Negm 17

Figure 3.1Culvert flow (R. E. Featherstone & C. Nalluri) 20

Figure 3.2 Flow over broad crested weir (M. HanifChaudhry). 24

Figure 3.3 broad crested weir with trapezoidal cross section 25

Figure 3.4 combined structure flow(M. HanifChaudhry) 27

Figure 3.5 Definition of symbolism for the combined structure 28

Figure 4.1 The Flume usedin the study 34

Figure 4.2 The Flume used in the study 35

Figure 4.3 The Overhead tank and the V-notch weir used in the study 36

Figure 4.4 Details of the V- notch weir 37

Figure 4.5 The measuring tank for the calibration of the V-notch weir flow 38

Figure 4.6 Calibration curve of the V- notch weir 40

Figure 4.7 Point gauges with its carrier..... 41

Figure 4.8 One of the models 42

Figure 5.1 Head Discharge Relations for Models 1-4..... 45

Figure 5.1 Continued, Head Discharge Relations for Models 5-8 46

Figure5.1 Continued, Head Discharge Relations for Models 9-12 47

Figure 5.2 Effect of weir height (H) on the Discharge for the BCW 48

Figure 5.2 Continued, Effect of weir height (P) on the Discharge for the BCW 49

Figure 5.3Side slope effect on the Discharge coefficients for the various models of the combined structure 50

Figure 5.4 Head Discharge Coefficient Relations for culvert flow..... 51

Figure 5.5 Head Discharge Coefficient Relations for culvert flow..... 52

Figure 5.6 Relation between measured and predicted discharges for the culvert 56

(a) Linear regression (b) power regression 56

Figure 5.7 Relationship between measured and predicted discharges for the BCW

(a) Linear regression (b) power regression 57

Figure 5.8 Relationship between measured and calculated discharges for the combined structure (a) linear regression (b) power regression 58

Figure 5.9 Variation of (Cd) with (H/P), (H/Y), (H/D) and (H/L) for models 1-4 59

Figure 5.9 Continued, Variation of (Cd) with (H/P), (H/Y), (H/D) and (H/L) for models (5-8) 60

Figure 5.9 Continued, Variation of (Cd) with (H/P), (H/Y), (H/D) and (H/L) for models 9-12 61

LIST OF TABLES

Table (2.1) Characteristics of straight weirs used by Khosrojerdi, and Kavianpour .. 16

Table (2.2) Characteristics of curved weirs used by. Khosrojerdi, and Kavianpour .. 16

Table (3.1) Types of flow through Culvert (R. E. Featherstone & C. Nalluri)..... 21

Table 4.1 Calibration Data of the V-notch weir..... 39

Table 4.2 Numbering and Dimensions of the models ……..... 43

Table 5.1 Coefficient of discharge as a function of Y/D for type 5 flow in a culvert with a flared – pipe end section (Bodhaine, 1976)..... 51

LIST OF SYMBOLS

A	Cross sectional Area, in m^2
b	width of the weir, in m
BCW	Broad Crested Weir
C_d	Discharge Coefficient, Dimensionless
D	Culvert internal dimension, in m
DS	Down-Stream, in m
f	Darcy-Weisbach friction factor (head loss coefficient), Dimensionless
g	Gravitational acceleration, in m/s^2
h	Head of water above the weir crest, in m
h_v	Head of water above the V-notch the weir crest, in m
h_f	Frictional head loss, Dimensionless
H	Total head of water above weir crest, in m
L	Length, in m
P	Pressure, in N/m^2

q	Discharge per unit width, in $m^3/s/m$
Q	Discharge, in m^3/s
Q_t	Total discharge, in m^3/s
Q_w	Discharge over the weir, in m^3/s
Q_c	Discharge through culvert, in m^3/s
S_o	Longitudinal slope of the culvert, Dimensionless
TEL	Total Energy Line, in m
US	Up-Stream., in m
v_D	Average velocity in culvert, in m/s
v_o	Average upstream approach velocity, in m/s
v_c	Average critical flow velocity, in m/s
W_e	Weber number, Dimensionless
y_o	Uniform water depth in the cannel, in m
y_c	Depth of flow at critical section, in m
y_t	Tail water depth, in m
Y	Up-Stream total head above the culvert bottom, in m

Z	Elevation head, in m
π	Dimensional group.
α	Coriolis coefficient, Dimensionless.
γ	Weight Specific of water, in N/m^3
ρ	Mass density of water, in Kg/m^3
σ	Surface tension of water, in N/m^2
μ	Dynamic viscosity of water, in Kg/m.s
θ	Angle between crest of the weir with the sides, in ºC

CHAPTER 1

INTRODUCTION

1.1 General

Stream flow is the volume of water that moves over a designated point over a fixed period of time. The flow of a stream is directly related to the amount of water moving off the watershed into the stream channel. It is affected by weather, increasing during rainstorms, and decreasing during dry periods. It also changes during different seasons of the year [1].

Stream scientist categorizes streams based on the balance and timing of the storm water runoff and base flow components. There are three main categories:[2]

- **Ephemeral streams** flow only during or immediately after periods of precipitation.

They flow less than 30 days out of the year and appear as dry river beds throughout most of the year.

- **Intermittent streams** flow only during certain times. Seasonal flow in an intermittent stream usually last longer than 30 days per year.
- **Perennial streams** flow continuously during both wet and dry times.

Water resource professionals have categorized the streams in the river system as in Figure 1.1:

1- Streams that have no tributaries flowing into them are called **first order streams**.

2- Streams that receive only first order streams are called **second-order Streams**.

3- When two second-order streams meet, the combined flow becomes a **third order streams**.

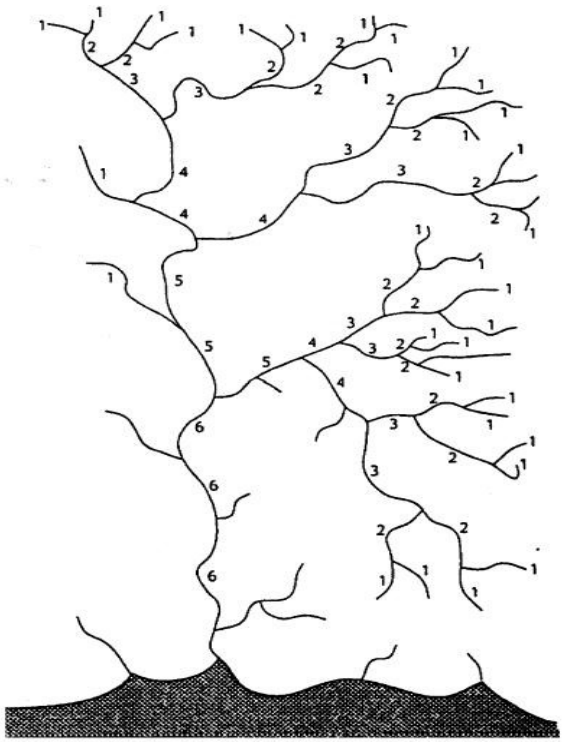

Figure 1.1 River system orders

In Iraq generally 90 percent of the annual rainfall occurs between November and April, most of it in the winter months from December through March. The remaining six months, particularly the hottest ones of June, July, and August, are dry. Except in the north and northeast, mean annual rainfall ranges between ten and seventeen centimetres. Rainfall in the mountains is more abundant and may reach 100 centimetres a year in some places [3].

In general, the climate of Iraq is hot and dry in the summers, and cool and a bit rainy in the winters. Except for the mountainous areas, the rainfall in Iraq qualifies it as a desert [4].

Most of the water resources in the area (Iraq) are perennial while others are intermitted or ephemeral [5].

The four causes for choose and construction the structure:

1-When ephemeral, intermittent streams which have a peak flow for a few hours, cross a roadway it needs to be provided with a passage for vehicles and foot passages. The culvert cannot convey all of the flood water at large flows or peak of floods.

2-In bank-full conditions more than 58% of the culvert systems located on the road-stream crossings is incapable of evacuating flood waters, a percentage which increases to 88.2% when the flow reaches the flood-prone stage. However, the drainage capacity of these works is often greatly reduced due to the obstruction caused by the bed-load transport.

3-For the stream ford (a shallow place with good footing) passages the greatest hazard is found.

4-Uncertainty surrounding peak flows due to the Global warming is predicted to cause significant changes to the world's climate, To address the uncertainty surrounding this issue, Defra (The Department for Environment, Food and Rural Affairs)guidance on flood defense scheme appraisal currently suggests sensitivity allowances for climate change, for example a 20% increase in peak flows over the next 50 years.

DHI (Danish Hydraulic Institute) will carry out detailed flood studies to determine the highways potential impact on the flood plains and villages located within the zone. The study will also include an assessment of the designed highway underpasses/culverts [6]

These four causes lead to three choices for construction the structure:

Choosing a bridge with dimensions capable for maximum discharge of the stream of great return period which may equal to the economic life of the bridge construction, since bridges are high level crossing structures which are expensive for wide streams, in this case it needs more construction time and cost, or

Choosing a culverts for normal stream flow (Fig 1.2) and allow the water to flow over the road during peak flood which occur a few times in the year or rarely during the economic life (usually 25 years) of the culvert (Fig 1.3).

Third alternative is constructing as a combined structure the upper part of this structure worked as a weir when the lower part un able to convey this flood water. This choice needs construction time and cost less than former, but traffic may be restricted during the big flood events.

Figure 1.2 Image of roadway culverts during normal stream flow

Figure 1.3 Image of roadway culverts during floods

The aim in highway drainage (culvert or bridge) is to prevent on-site water standing on the surface and convey the off-site storm runoff from one side of the roadway to the other.

The main operational differences between culverts and bridges may be described in terms of [7]:

- Economics.
- Hydraulics.
- Structural aspects.
- Maintenance attention requirement

Economically, the initial and operating costs of culverts are considerably less than that of bridges.

Roadway overtopping will begin when the headwaters rises to the elevation of the roadway. The overtopping will usually occur at the lowest point of the sag vertical

curve on the roadway. The overtopping flow will be similar to flow over a broad crested weir.

For the purpose of studying flow characteristics over submerged culverts it is necessary to describe both culverts and broad crested weirs individually in detail.

If the available fill height of the culvert limits the vertical size of the culvert, multiple cells used, and the number of separate culvert cells shall be kept to the minimum.

1.2 Culverts

Culverts are closed conduits sized hydraulically to convey surface water runoff under a highway, railroad, and others. Understanding the variety of flow regimes through culverts is necessary to evaluate their hydraulic performance in flood studies, operation of irrigation systems, and environmental studies, during rainstorms overtopping of roadways may occur. Combined broad crested weir and culvert flow would result, and the discharge carrying capacity of the culvert barrels may be affected [8].

A short passage way to flow under a highway, railroad, or other embankment is referred to as a culvert. The culvert may be circular, rectangular, arch, or elliptical in shape. A rectangular culvert is referred to as a box culvert [9].

Although a culvert is a simple hydraulic structure, the computation of flow conditions through it may be somewhat complex. This is because several different flow conditions are possible and these conditions depend upon several parameters. The culvert may flow full, or partially full throughout its length, or in part of the length. The control may be at the upstream end (called an inlet control) or it may be

at the downstream end (called an outlet control). Depending upon the head and tail water levels, the control may shift from the inlet to the outlet and vice versa as these water levels change.

A variety of flow types can occur in a culvert, depending on the upstream and downstream conditions, the inlet geometry, and the conduit characteristics. A culvert may flow full, partially full (in subcritical or supercritical flow conditions), or a combination of both. Partially full flow can be subcritical or supercritical. [10]

There are definitions of six flow types through culverts based on the relative heights of the upstream head and tail waters, these six flow types are summarized in Figure 1.4 [11].

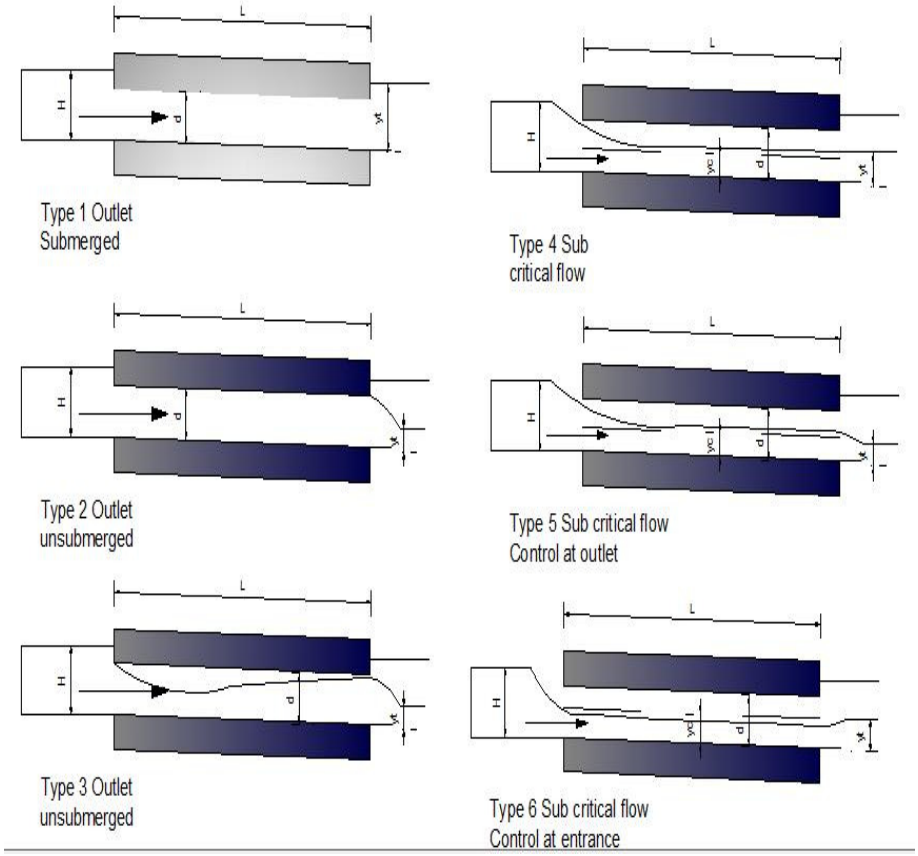

Figure 1.4 Types of culvert flow.

- Type(1) Outlet Submerged H>d, yt>d flow full
- Type(2) Outlet Un-Submerged H>H*,yt<d flow full
- Type(3) Outlet Un-Submerged H>H*,yt<d Partly full
- Type(4) Outlet Un-Submerged H<H*,yt>yc Subcritical flow
- Type(5) Outlet Un-Submerged H<H*,yt<yc Subcritical flow Control at outlet
- Type(6) Outlet Un-Submerged H<H*,yt<yc Subcritical flow Control at entrance

H*= (1.2 to 1.5) d, depending on the entrance geometry of the culvert

1.3 Weirs

Weir is a barrier across a river or stream designed to alter the flow characteristics. In most cases, weirs take the form of a barrier, smaller than most conventional dams, across a river that causes water to pool behind the structure (not unlike a dam) and allows water to flow over the top. Weirs are commonly used to alter the flow regime of the river, prevent flooding, measure discharge and help render a river navigable

A weir is a low dam or an overflow structure built across an open channel. It has a specific size and shape with a unique free-flow, head-discharge relationship. The edge or surface over which the water flows is called the crest. Discharge rates are determined by measuring the vertical distance from the crest to the water surface in the pool upstream from the crest.

Weirs can be used for both high flows with the discharge measured by the water stage in the pool behind the weir or for volumetric flows in extremely low flow conditions that are too small to measure by current meter. One disadvantage of using weirs is that in sediment laden streams weir will allow sediment depositions in the pool above the weir.

Many formulas and shapes and sizes of weirs are used to compute the discharge rate. Some commonly used weirs will be described here. Materials are typically aluminum or stainless steel.

The weir is an obstruction constructed across a river or stream for the purpose of rising water surface or for water flow measurement. Weirs are extensively used in hydraulic structures to control the flow depth and discharge. They are classified in two branches of sharp crested and broad crested weirs. The crest of the weirs may also be straight or curved.

1.4 Broad-Crest Weirs

A broad crested weir is a structure with a horizontal crest above which the fluid pressure may be considered hydrostatic. If such a situation is to exist, then with reference to (Fig 1.5) the following inequality must be satisfied, [12]..

$$0.08 \leq \frac{H}{L} \leq 0.5 \qquad 1.1$$

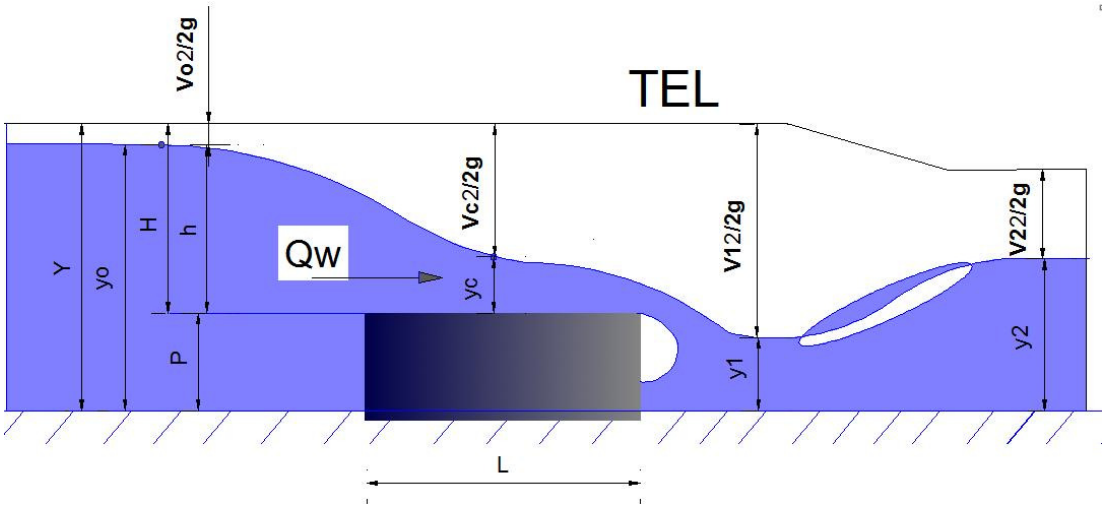

Figure 1.5 Broad crested weir

If the upstream corner of the weir is sharp then the flow will separate and then reattach enclosing a separation bubble. But if the upstream corner is rounded this separation bubble will not exist.

1.4.1 Classification of Broad Crest Weirs

A sharp crested, rectangular weir is a flat plate obstruction in an open channel flow flume or natural channels, with a straight; it allows water flow over the weir. It is used to meter the flow of water over the weir (and through the open channel) by measuring the head of water over the weir crest because this type is more accurate. There are rectangular weir and several other types of weirs and flumes for measuring open channel flow rate.

Depending on the value of (h/L) the flow over a broad crested weir with an upstream sharp corner has these classifications as below [13].

1. $(h/L) \leq 0.1$: In this range the critical flow control section is at the downstream end of the weir and the resistance of the weir surface plays as important role in determining the value of (C_d) (Fig 1.6a) this kind of weir, termed as long-crested weir, finds limited use as a reliable flow measuring device.

2. $0.1 \leq (h/L) \leq 0.35$: The critical depth control occurs near the upstream end of the weir and the discharge coefficient varies slowly with (h/L) in this range (Fig 1.6b) this type called a true broad crested weir.

3. $0.35 \leq (h/L) \leq$ about 1.5: The water surface profile will be curvilinear all over the weir. The control section will be at the upstream end (Fig 1.6c) the weirs of this

type called a narrow crested weir. The upper limit of this range depends on the value of (h/P).

4. (h/L) > About 1.5: The flow separates at the upstream corner and jumps clear across the weir crest. The flow surface is highly curved (Fig 1.6d), and the weir can be classified as sharp crested

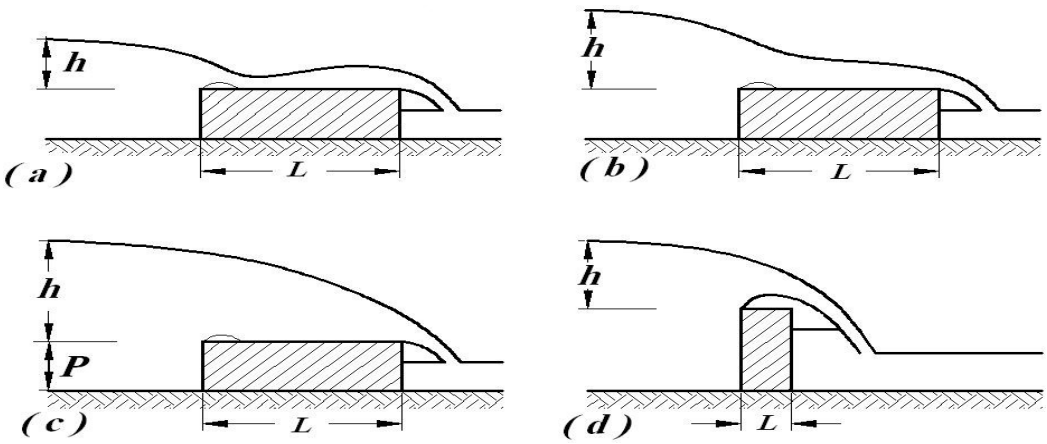

Figure 1.6 Flow types of broad crested weir

1.5 Objective of Study

The main objective of this research is to study relations between variables weir crest height (P), weir side slope angle (θ), internal box culvert dimension (D)and the height of water over the weir crest (h) of the combined structure. The procedures for reaching this objective are as follows:

1. Studying the head discharge relations for each structure separately (weir, culvert and combined structure).
2. Studying the effect of weir crest height (P), weir side slope angle (θ) and internal box culvert dimension (D) on the discharge coefficient (C_d).
3. Finding experimental rational equations for the discharge coefficient (C_d) for each flow condition (weir, culvert and combined structure).

CHAPTER 2

LITERATURE REVIEW

2.1 General

This chapter presents a brief review of the most important experimental studies with the following subjects:

1. Culverts.
2. Broad Crested Weir.
3. Simultaneous Flow over and under Hydraulic Structures

2.2 Reviews of Works Carried on Culverts

Culverts have been used for thousands of years as a structure to transmit water under walkways and roadways.

Several researchers performed model tests on scour downstream of culverts and the combined results suggest the following Formulas [14], [15]:

- Scour depth below bed level, (y_S):

$$y_s = 0.65\ D \left(\frac{U_o}{U_{*c}}\right)^{\frac{1}{3}} \tag{2.1}$$

- Scour width, (*Bs*):

$$Bs = 7.5\ D\ Fr^{2/3} \tag{2.2}$$

- Scour length,

$$Ls = 15DFr^{2/3} \tag{2.3}$$

where: U_o: flow velocity at exit in(m²/sec) ; U_{*c}: shields critical shear velocity in(m²/sec), $U_{*c}= (\tau_c/\rho)^{1/2}$: τ_c: critical shear stress in(N/ m²) ; (ρ): mass density of water in(kg/m³) ;(D): culvert height (in m) ;(Fr): Froude number; $Fr=U_o/ (gD)^{1/2}$.

Ehab A. Meselhe and K. Hebert, presented a study to simulate flow through culverts for the different flow conditions with and without weir overtopping.

The culvert configurations used was a low weir (overall height of 154 mm above the flume floor) with two (76.2) mm diameter round culverts with inlet inverts of (43.2 mm) and outlet inverts of (38.1 mm) for a slope of (0.01333) over the (0.381 m) length of the culvert. The two culverts were placed symmetrically about the centerline of the structure with their centers at (76.2 mm) from the overall structure center line as shown in Figure 2.1.

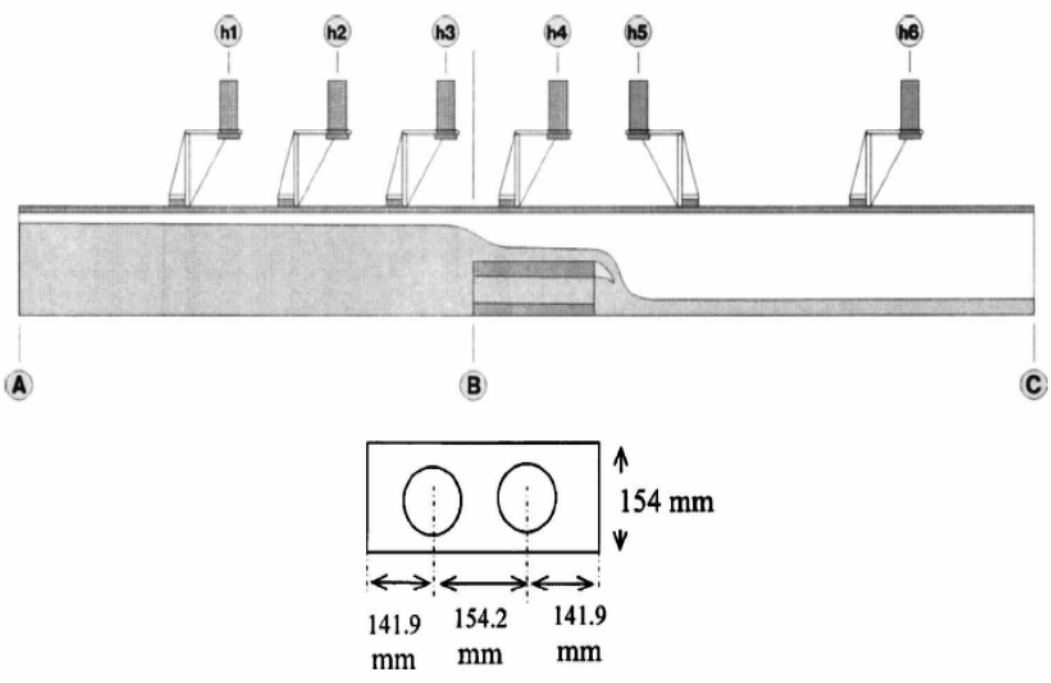

Figure 2.1 Profile of the flume, showing locations of the water level sensors.[9]

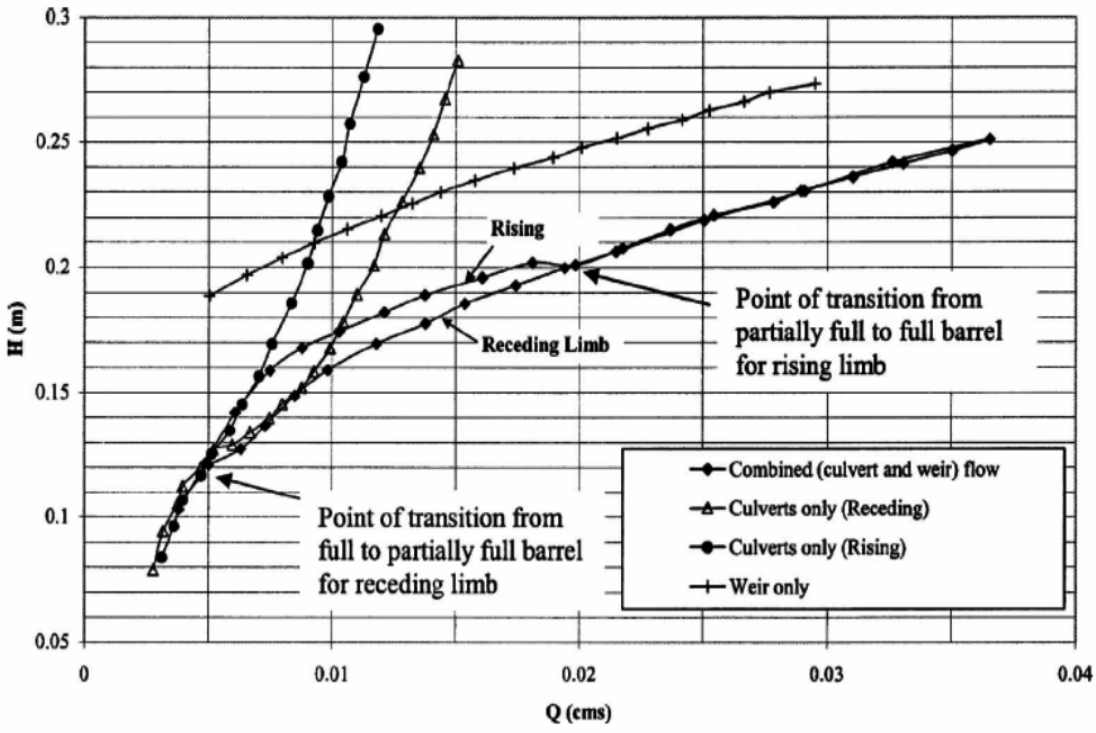

Figure 2.2 Steady free flow experiment (Upstream head versus discharge).

2.3 Reviews of Works Carried on Broad Crested Weir

Engineering hydraulics terms a "weir" as structures that divert the flow or control the level of a waterway. The investigators study of weirs since the 18th century, the general equation of discharge for rectangular weirs was first suggested by Poleni (1717) as:

$$Q = \frac{2}{3} C_d \sqrt{2g} L h^{3/2} \tag{2.4}$$

Where: C_d :discharge coefficient of the weir, L: width of the weir; h: head of water on the weir crest; g: the gravitational acceleration.

The upstream approach velocity effect of the was considered by Weisbach (1846), he included the average approach velocity head in the Poleni Eq. (2.4), and then develops the new equation.[16],[17] :

$$Q_{act} = \frac{2}{3} C_d \sqrt{2g} L \left[\left(h + \frac{v_o^2}{2g} \right)^{\frac{3}{2}} - \left(\frac{v_o^2}{2g} \right)^{\frac{3}{2}} \right] \tag{2.5}$$

where: v_O: average approach velocity of the incoming flow upstream the weir.

Francis (1852), studied the of side contractions effects for rectangular weirs, and he concluded the effect of horizontal curvature of the streamlines by developing a new equation [18]:

$$Q_{act} = 1.84 \left[b - 0.1n \left(h + \frac{v_o^2}{2g} \right) \right] \left[\left(h + \frac{v_o^2}{2g} \right)^{\frac{3}{2}} - \left(\frac{v_o^2}{2g} \right)^{\frac{3}{2}} \right] \tag{2.6}$$

Kindsvater, C.E. and R.W (1957). Carter had given a modified version of Eq. (2.4), based on their wide experimental investigations covering a wide range of variables, as [19]:

$$Q = \frac{2}{3} C_{dc} \sqrt{2g} L_e H_{1e}^{3/2} \tag{2.7}$$

Where: C_{dc} :discharge coefficient of the contracted weir; L_e : effective width of the contracted weir, L_e =L+K_L ; H_{le} : effective head of water on the weir, H_{le} =H_1 +$K_H H_1$:head of water on the weir, L:width of contracted weir, K_H & K_L : are coefficient to account for the combined effect of viscosity and surface tension.

A series of experiments were conducted in Iranian the Water Research Centre of the Ministry of Energy. Broad crested weirs with straight and curved shapes were studied by A. Khosrojerdi, M.R. Kavianpour(2002), The study was relies on hydraulic model studies for different wide and curvature of the weir. [20].

They have done their experiments in two steps. In the first step, straight weirs were

used to determine the discharge coefficient, the position of the critical depth and the water surface profile over the weir.

Second step, experiments were performed with curved weirs. Variation of water surface and discharge were measured to determine the discharge coefficient of the weirs. Tables (2.1) and (2.2) show details of the weir models tested.

Table (2.1) Characteristics of straight weirs

Weir	R (cm)	L (cm)	H_{max} (cm)	B (cm)	P (cm)
1	5	20	20	75	20
2	5	35	20	75	20
3	5	50	25	75	20

Table (2.2) Characteristics of curved weirs

Weir	P (cm	R(cm)	H_{max} (cm)	L (cm)	R (cm)
1	20	High	20	20	5
2	20	122.5	20	20	5
3	20	72.1	20	20	5
4	20	-122.5	20	20	5
5	20	-72.1	20	20	5

* The Negative sign represents the convex weirs.

Where: P: weir height; L: width of the weir in the direction of flow; $\mathbf{H}_{max}$: maximum depth of water over the weir; B: length of the weir; R: radius of the weir corners.

Khosrojerdi, and Kavianpour (2002)get a new relation for the discharge coefficient for straight broad crested weirs, which is a function of the height (P) and width (L) of the weir and the depth of water over it (h).

The overall results were used to develop a new equation using optimization methods

(within 5% error) in the following form:

$$C_d = \left(0.5 + 0.33\frac{h}{P} + \frac{h}{L}\right)^{0.06} \tag{2.8}$$

Where : h:head of water above the weir.

2.4 Review of the Works Carried on Combined Flow

Abdul Azim M. Negm (2002) had conducted an experimental investigation on simultaneous flow through box culvert and over the broad crested weir. The flow at the culvert outlet is considered as submerged flow. Both the culvert and the broad crested weir (BCW) widths are smaller than the channel width [21] as shown in Figure 2.3.

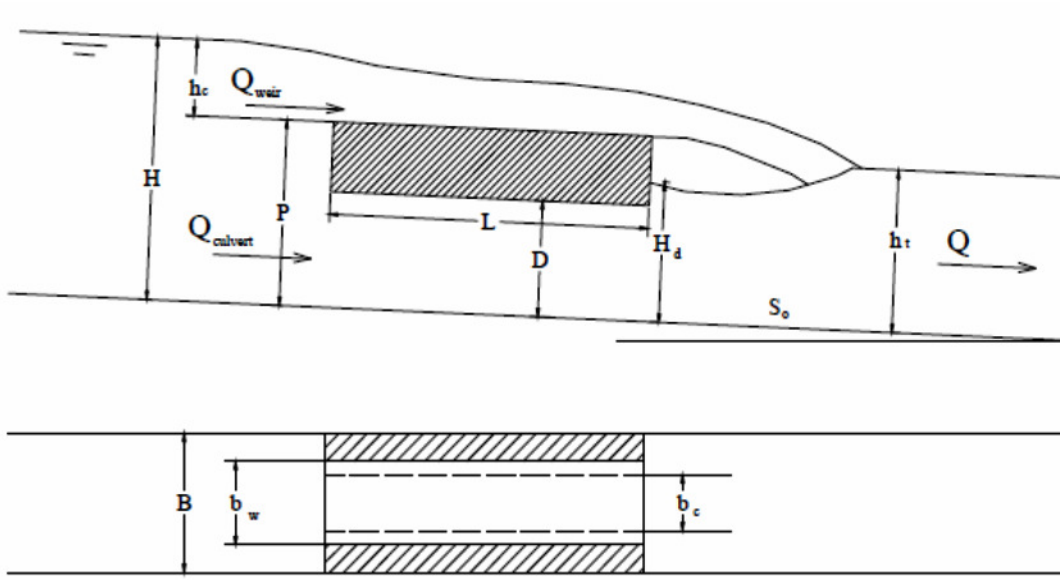

Figure 2.3 Definition sketch for simultaneous flow through box culvert and over the contracted broad crested weir

A typical tested model consisted of a contracted broad crested weir combined with one vent box culvert with the same total length from entrance to exit of 40 cm. and 30.5 cm width, and the height of the culvert barrel was kept constant to 6 cm.

The flow at both inlet and outlet of the culvert were submerged and the culvert is

flowing full. The approaching discharge to the structure was more than the capacity of the culvert and thus a flow over the weir was expected. The recorded measurements include the flow depth at 40 cm upstream from the culvert inlet and just downstream of the culvert to ensure that the flow over the weir is free. The tail-water depth was recorded several times for each discharge to account for the effect of submergence

$$F = 1.375 - 0.0376S - 0.0675\frac{H}{D} + 0.0124\frac{b_w}{D} + 0.0953\frac{b_c}{D} - 0.3815\frac{b_w}{b_c} + 16.265S_o \qquad (2.9)$$

where: F: factor to account for the interaction between the flow over the weir and that through the culvert; S: the submergence ratio (S= tail water depth / depth of culvert opening); H: the upstream head of water above the canal bed; D: the culvert height; b_w: the width of the weir; b_c: the width of the culvert; S_O: the longitudinal slope of the canal.

The simultaneous discharge over the weir and through the culvert then obtained by equation:

$$\left[\frac{2}{3}C_d C_v b_w \sqrt{\frac{2}{3}g}h_w^{3/2} + C_D A_o \left(\frac{2g(H-h_t)}{1+\left(29C_D^2 n^2 L/R_o^{4/3}\right)}\right)^{\frac{1}{2}}\right] \qquad \text{….2.10)}$$

where: Q:discharge over weir; C_d :coefficient of discharge: C_v: coefficient of velocity ;Cv= (Ho/hw) 1.5; H_o: total energy head over the weir; Ho=hw+ (V_a) 2/2g; V_a: velocity of approach; V_a = Q/ (BH);Q: total incoming discharge; B: width of the approaching channel; H: depth of flow in the approaching channel; b_w :width of weir; h_w: head of water over the weir; Q_c: discharge through the culvert; A_o: cross

sectional area of the culvert; R_o: hydraulic radius of the culvert; C_D: discharge coefficient of the culvert was taken as (0.75); n: Manning roughness coefficient of the culvert material; L: length of the culvert; h_t: tail-water depth downstream the culvert.

CHAPTER 3

THEORETICAL ANALYSIS

3.1 General

Since the 19th century several theoretical calculations of discharge measurement for weirs and culverts were developed. The theoretical part of this work presents an analysis of the free flow through and over the combined structure, the upper part of the structure acts as a broad crested weir, while the lower part acts as a culvert. Dimensional analysis was performed to obtain the dimensionless parameters that effect on the coefficient of discharge. To obtain the theoretical discharge through the combined structure, equations of flow over a broad crested weir and flow through culverts were used.

3.2 Flow Through the Culvert

The hydraulic performance of culvert flow is based on the characteristics of the barrel flow (free surface flow, orifice flow or pipe flow) conditions which depend on its length, roughness, gradient and upstream and downstream water levels [22]

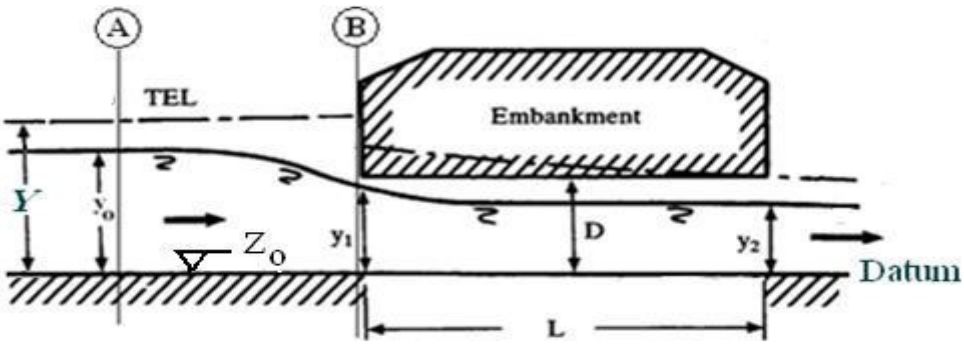

Figure 3.1Culvert flow.[22]

Based on the factors mentioned above and with reference to (Fig. 3.1), the flow through the culverts can be classified into seven types as shown in table (3.1) below.

Table (3.1) Types of flow through Culvert.[22]

No.	y_o /D	y_o ,y_c , y_2 , D	Culvert length (L)	Longitudinal slope (S_o)	Culvert behaviour	Flow type
	Free entrance conditions					
1	y_o /D < 1.2	y_o>y_c< y_2< D	any length	mild slope	open channel	subcritical
2	y_o /D < 1.2	y_o>y_c> y_2< D	any length	mild slope	open channel	subcritical
3	y_o /D < 1.2	y_o<y_c> y_2< D	any length	steep slope	open channel	supercritical
4	y_o /D < 1.2	y_o<y_c< y_2< D	any length	steep slope	open channel	supercritical
	Submerged entrance conditions					
5	y_o /D > 1.2	y_2< D	short	any slope	orifice flow	…….
6	y_o /D > 1.2	y_2< D	long	any slope	pipe flow	…….
7	y_o /D > 1.2	y_2> D	any length	any slope	pipe flow	…….

Applying the energy equation to the free surface flow of Figure 3.1 between sections (A) & (B), obtaining:

$$z_o + \alpha_o\left(\frac{v_o^2}{2g}\right) + \frac{p_o}{\gamma} = z_1 + \alpha_1\left(\frac{v_1^2}{2g}\right) + \frac{p_1}{\gamma} + h_f \qquad (3.1)$$

The velocity varies across the section, the mean of the velocity head $\left(v^2/2g\right)_{mean}$ is

not equal to $\left(v^2/2g\right)$, where the subscript mean refers to the mean value over the cross section. The ratio of these quantities is called the Coriolis coefficient [23],denoted, α, which is equal or larger than (1) but rarely exceeds (1.15). For a uniform velocity distribution α=1.

If the energy Equation (3.1) is rewritten in term of the mean velocity head, the later must be transformed as:

$$z_o + \frac{v_o^2}{2g} + \frac{p_o}{\gamma} = z_1 + \frac{v_1^2}{2g} + \frac{p_1}{\gamma} + h_f \tag{3.2}$$

Since $p_o = p_2 = p_{atmosphere}$, and for horizontal bed $z_o = y_o \& z_1 = y_1$

$$y_o - y_1 = \frac{v_1^2}{2g} - \frac{v_0^2}{2g} + h_f \tag{3.3}$$

The head loss (h_f) was expressed by Darcy and Weisbach as:

$$h_f = f\frac{L}{D}\frac{v^2}{2g} \tag{3.4}$$

The effect of frictional head loss (h_f) was neglected, since the bed plate of the flume is smooth and the distance (L) between sections (A) & (B) is short, Eq. (3.2) will reduce to:

$$v_1 = \sqrt{2g\left(y_o - y_1 + \frac{v_0^2}{2g}\right)} \tag{3.5}$$

From the continuity:

$$Q = Av \tag{3.6}$$

Substituting Eq. (3.5) in Eq. (3.6), and for $\left(y_o + \frac{v_0^2}{2g}\right)$ by (Y) results:

$$Q_c = \frac{\pi}{4} D^2 \sqrt{2g(Y - y_1)} \tag{3.7}$$

Experimental results showed that the actual discharge Q_{act} is smaller than the theoretical discharge Q_{theo} = Qc that obtained from Eq. (3.7) for the following two reasons:

1. The jet size that left the culvert entrance is smaller than the actual culvert size.
2. The shear effect of the viscous between the orifice edge and the water.

When the effect of the two reasons account a discharge coefficient (Cd), is introduced to Eq. (3.7).

French (1986), gave the discharge equation for culvert flow when it acts as an orifice which is the same as the derived equation (3.7), and he takes the upstream total head from the bottom of the culvert (i.e. he cancelled the (y_1)term) as given bellow [24]:

$$(Q_c)_{act} = C_d \frac{\pi}{4} D^2 \sqrt{2g(Y)} \tag{3.8}$$

3.3 Flow over the Broad Crested Weir

The flow in open channel may become critical if the channel bottom is raised by a specified amount. If the raised part of the channel is sufficient length in the direction of flow, then may be critical flow and may be parallel streamlines to the weir. This may be used for flow measurement .

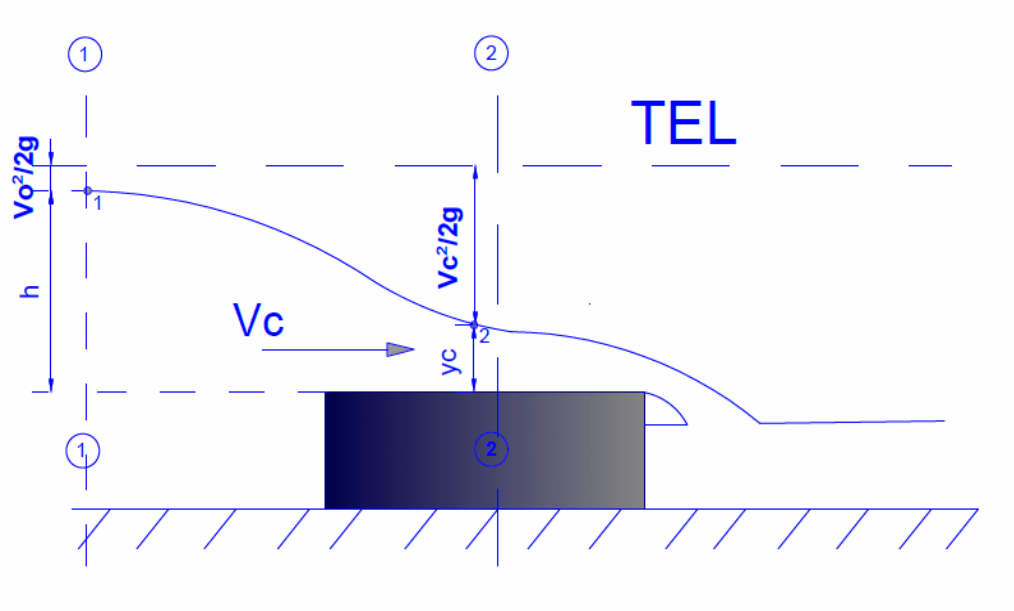

Figure 3.2 Flow over broad crested weir (M. Hanif Chaudhry).

Assume that the flow on the weir in Figure (3.2) is critical, and the weir crest is horizontal, applying the energy equation to the free surface flow between points 1 & 2, obtaining:

$$h + \alpha_o \frac{v_o^2}{2g} + \frac{p_1}{\gamma} = y_c + \alpha_c \frac{v_c^2}{2g} + \frac{p_2}{\gamma} + h_f \tag{3.9}$$

Assuming that head losses (h_f) between sections (1) and (2) are negligible, velocity distributions are uniform $(\alpha_o = \alpha_c = 1)$, and all streamlines are straight and parallel to each other, then the energy Eq. (3.9) will reduce to:

$$\frac{V_c^{\,2}}{2g}$$

$$h + \frac{v_o^2}{2g} + \frac{p_1}{\gamma} = y_c + \frac{v_c^2}{2g} + \frac{p_2}{\gamma} \tag{3.10}$$

Since $p_1 = p_2 = p_{atmosphere} \& H = \left(h + \frac{v_o^2}{2g}\right)$, then Eq. (3.10) gives:

$$v_c = \sqrt{2g(H - y_c)} \tag{3.11}$$

For trapezoidal weir section:

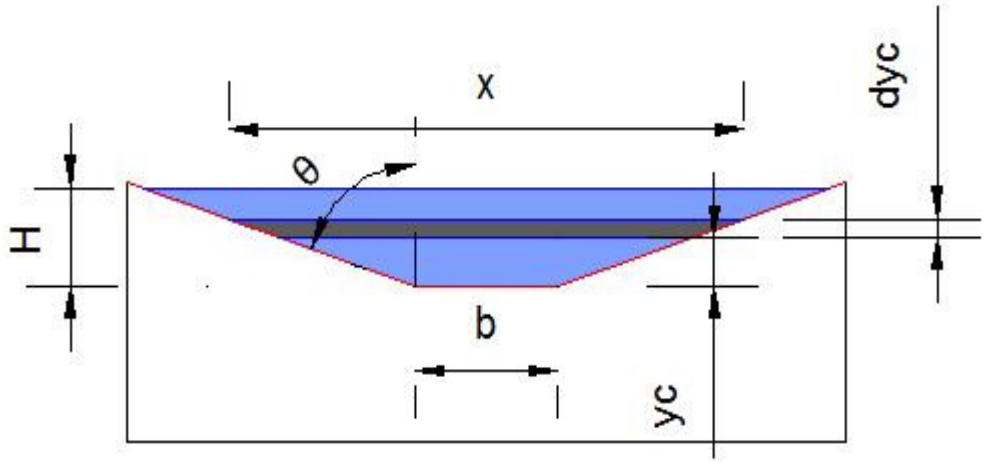

Figure 3.3 Broad crested weir with trapezoidal cross section

By taking a horizontal strip in the flow section at height y_c of length x and width dy_c:

$$x = b + 2\, y_c \tan\theta \tag{3.12}$$

Area of this strip is then determined by:

$$dA = x dy_c \tag{3.13}$$

From Eq. (3.11) the critical velocity in this strip element is given by

$v_c = \sqrt{2g(H - y_c)}$ and the discharge (dQ) is:

$$dQ = v_c dA_c = \sqrt{2g(H - y_c)}(b + 2\, y_c \tan\theta)\, dy_c \tag{3.14}$$

Integrating (dy_c) through the section of flow, gives:

$$Q_w = \int_0^H \sqrt{2g(H - y_c)}(b + 2y_c tan\theta)dy_c \tag{3.15}$$

Evaluating of the integration results:

$$Q_w = \sqrt{2g}\left[-\frac{2}{3}(b + 2\, y_c \tan\theta)(H - y_c)^{\frac{3}{2}} - \frac{8}{15}\tan\theta\, (H - y_c)^{\frac{5}{2}}\right]_0^H \tag{3.16}$$

Substituting limits of the integration gives:

$$Q_w = \left(\frac{2}{3}\sqrt{2g}bH^{3/2} + \frac{8}{15}\sqrt{2g}H^{5/2}\tan\theta\right) \tag{3.17}$$

Since Eq. (3.17) had derived depending on the assumption that all streamlines of water flowing on the weir crest are horizontal, and the effect of viscosity and surface tension were neglected. Hence the discharge obtained from Eq. (3.17) is greater than the actual discharge; therefore a discharge coefficient is to be added to this equation, resulting:

$$(Q_w)_{act} = C_d\left(\frac{2}{3}\sqrt{2g}bH^{3/2} + \frac{8}{15}\sqrt{2g}H^{5/2}tan\theta\right) \tag{3.18}$$

Subramany, K. (1986), gave the discharge equation for trapezoidal cross section of weirs which is like the derived equation (3.18)

3.4 Combined Structure Flow

The flow through the combined structure Fig (3.4) may be free when both the flow

over weir and the flow through the culvert are free and it is termed submerged when the flow through the culvert is submerged (and the flow over the weir may or may not be submerged).

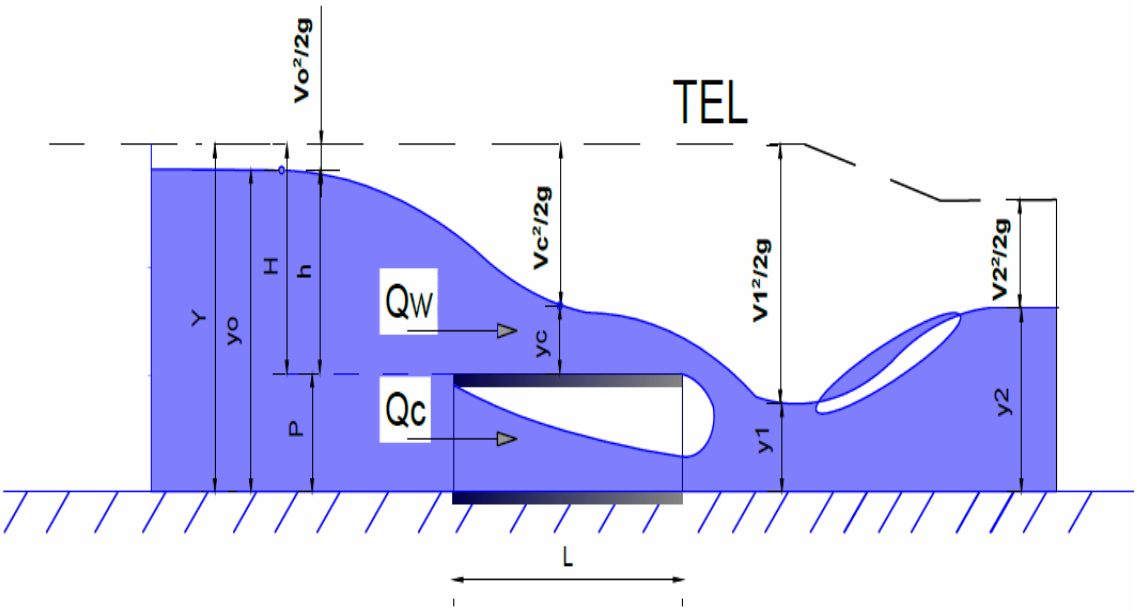

Figure 3.4 combined structure flow(M. Hanif Chaudhry)

The simultaneous discharge can be obtained by summing the overflow discharge over the broad crested weir and the under flow culvert discharge.

$$Q_t = Q_w + Q_c \tag{3.19}$$

Substituting for Q_w and Q_c by Eqns. (3.17) and (3.7):

$$(Q_t)_{act} = C_d\left[\left(\sqrt{2g}\frac{2}{3}bH^{3/2} + \sqrt{2g}\frac{8}{15}H^{5/2}\tan\theta\right) + \frac{\pi}{4}D^2\sqrt{2gY}\right] \tag{3.20}$$

Where (C_d) is a coefficient discharge to account for the combination between the flow over the weir and that through the culvert. The combined discharge coefficient (C_d) is to be determined experimentally.

3.5 Dimensional Analysis

There are powerful tools like dimensional analysis and π-theorem which may solve many theoretical and experimental physical studies. The dimensional analysis is working to reduce the number of separate variables involved in a particular type of physical system into a smaller number of non-dimensional groups of the variable. The arrangement of the variables in the groups is generally chosen so that each group has a physical significance. All physical parameters can be expressed in terms of a number of basic dimensions, in engineering the basic dimensions, Mass (M), Length (L) and Time (T) are sufficient for this purpose . The Buckingham (Pi Theorem) was used to develop dimensionless parameters, the Pi (π) terms, from the variables.

Five parameters are used to describe the geometry of the broad crested weir and the culvert as shown in Fig (3.5)

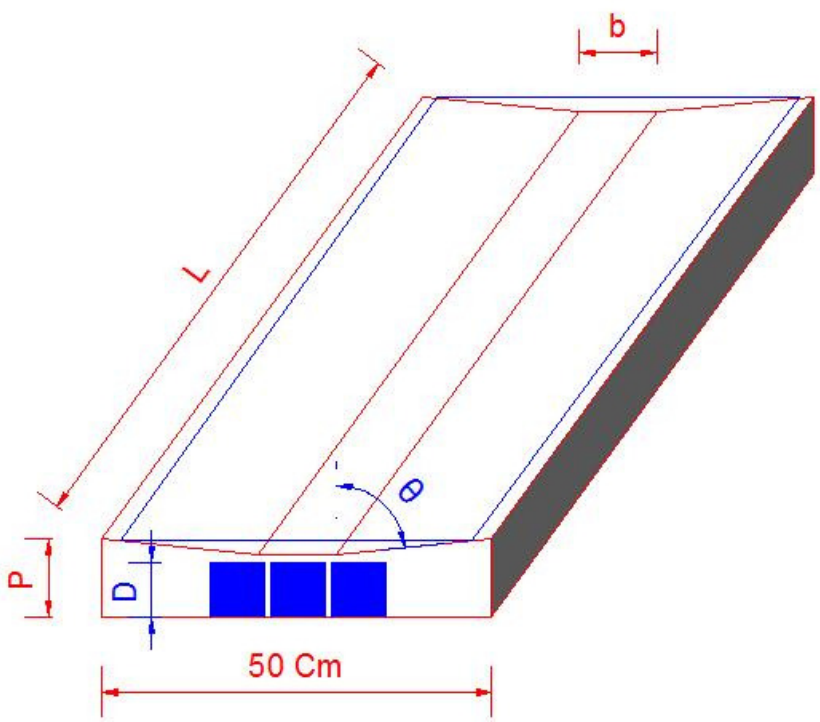

Figure 3.5 Definition of symbolism for the combined structure

The discharge over a broad crested weir and through the culverts depends on:

1- The geometry of the structure, which is described by:

a- Bottom width of the weir (b) .

b- Weir height (P).

c- Weir side slopes ($\tan\theta$).

d- Upstream total head above the weir crest (H).

e- Weir length (L).

f- Diameter of the culvert (D).

2- Fluid (water properties) which they are:

a- Weight density (γ).

b- Surface tension (σ).

c- Viscosity (μ).

d- Mass density (ρ).

3-Fluid characteristics which are: the gravitational acceleration (g).

The discharge passed through the combined structure depends on the variables mentioned above, and can be expressed as the following relation:

$$Q = \phi[g, H, P, b, L, \tan\theta, D, \rho, \mu, \sigma] \tag{3.21}$$

Taking variables (H) from the geometry of the structure,(ρ) from fluid water properties and $(g)$from fluid characteristics as repeating variables

, the (π) terms can be expressed as:

$\pi_1 = \rho, g, H, Q$; $\pi_2 = \rho, g, H, P$ $\pi_3 = \rho, g, H, b$

$\pi_4 = \rho, g, H, L$; $\pi_5 = \rho, g, H, D$; $\pi_6 = \rho, g, H, \tan\theta$; $\pi_7 = \rho, g, H, \mu$

; $\pi_8 = \rho, g, H, \sigma$

For π_1 :

$$\pi_1 = M^0 L^0 T^0 = (ML^{-3})^{\alpha}(LT^{-2})^{\beta}(L)^{\gamma}(L^3T^{-1})^{+1}$$

For M: $\alpha = 0$; For T: $0 = -2\beta - 1$; $\beta = \frac{-1}{2}$; For L: $0 = -3\alpha + \beta + \gamma + 3$; $\gamma = \frac{-5}{2}$

$$\pi_1 = \frac{Q}{\sqrt{g}H^{5/2}}$$

For π_2 ; $\pi_2 = M^0 L^0 T^0 = (ML^{-3})^{\alpha}(LT^{-2})^{\beta}(L)^{\gamma}(L)$

For M: $\alpha = 0$; For T: $0 = -2\beta$; $\beta = 0$; For L $0 = -3\alpha + \beta + \gamma + 1$; $\gamma = -1$:

$$\pi_2 = \frac{P}{H}$$

By the same manner: $\pi_3 = \frac{b}{H}$, $\pi_4 = \frac{L}{H}$ and $\pi_5 = \frac{D}{H}$

For π_6 : $\pi_6 = \rho^{\alpha} g^{\beta} H^{\gamma} \tan\theta$

Since ($\tan\theta$) is a dimensionless variable; $\pi_6 = \tan\theta$

For π_7 : $\pi_7 = M^0 L^0 T^0 = (ML^{-3})^{\alpha}(LT^{-2})^{\beta}(L)^{\gamma}(ML^{-1}T^{-1})$

For M: $0 = \alpha + 1, \alpha = -1$; For T: $0 = -2\beta - 1$; $\beta = \frac{-1}{2}$;

For L: $0 = -3\alpha + \beta + \gamma - 1$; $\gamma = \frac{-3}{2}$; $\pi_7 = \frac{\mu}{\rho\sqrt{g}H^{3/2}} = \frac{\mu}{\rho\sqrt{gH}H}$

Substituting for $V = \sqrt{gH}$; $\pi_7 = \frac{\mu}{\rho V H} = \frac{1}{Re}$

For π_8 : $\pi_8 = M^0 L^0 T^0 = (ML^{-3})^{\alpha}(LT^{-2})^{\beta}(L)^{\gamma}(MT^{-2})$

For M: $0 = \alpha + 1;\ \alpha = -1$; For T: $0 = -2\beta - 2\ ;\ \beta = -1$;

For L $0 = -3\alpha + \beta + \gamma;\ \gamma = -2$; $\pi_8 = \frac{\sigma}{\rho g H^2} = \frac{\sigma}{\rho V^2 H} = \left(\frac{1}{We}\right)^2$

The functional relationship then becomes:

$$\pi_1 = \phi[\pi_2, \pi_3, \pi_4, \pi_5, \pi_6, \pi_7, \pi_8] \tag{3.22}$$

Substituting the (π) terms obtained into Eq. (3.22):

$$\frac{Q}{\sqrt{g}H^{5/2}} = \phi\left[\frac{H}{P}, \frac{H}{b}, \frac{H}{L}, \frac{H}{D}, \tan\theta, Re, We\right] \tag{3.23}$$

Dimensionless parameters (π7 & π8) shows that both Reynolds number (Re) and Weber number (We) are varies proportionally with (V), and (V) varies proportionally with (H) and (Re& We) inversely varies with (μ & σ) respectively, therefore the effect of viscosity and surface tension decrease with increase in (H) and it can be neglected if the head (H) is not too small (not less than 6mm) [25], for these reasons and using same fluid in which (ρ, σ & μ) are constant , terms (Re) and (We) can be terminated from Eq. (3.23) to form the new relation:

$$\frac{Q}{\sqrt{g}H^{5/2}} = \phi\left[\frac{H}{P}, \frac{H}{b}, \frac{H}{L}, \frac{H}{D}, \tan\theta\right] \tag{3.24}$$

Since (C_d) is a dimensionless parameter and similar in form to the dimensionless term (π_1), it can be substituted for (π_1) in the evaluation of the problem. This allows the evaluation of the coefficient of discharge as a function of the geometrical

parameters:

$$C_d = \phi\left[\frac{H}{P}, \frac{H}{b}, \frac{H}{L}, \frac{H}{D}, \tan\theta\right] \tag{3.25}$$

Equation (3.25) is for the Discharge coefficient through the combined structure, and for the Broad Crested Weir, terms concerned with the culvert flow to be removed, then it will be reduced to:

$$C_d = \phi\left[\frac{H}{P}, \frac{H}{b}, \frac{H}{L}, \tan\theta\right] \tag{3.26}$$

And for the flow through the culvert pipe, terms concerned to the Broad Crested Weir flow to be removed and the equation will be:

$$C_d = \phi\left[\frac{Y}{L}, \frac{Y}{D}\right] \tag{3.27}$$

Determination of the actual form of these functions done by statistical analysis of the experimental data

CHAPTER 4

EXPERIMENTAL SET-UP AND METHODOLOGY

4.1 General

Experiment works were conducted in the flume of the Hydraulic Laboratory of Engineering College, Salahaddin University. Simulate flow over broad crested weir and through multi-cell box culvert has been done by using Laboratory apparatus to record measurements discharge and water depth.

The methodology used in this study is designed to apply the objectives of the study based on the described in the scope of work. The measurements presented in this study are prepared to provide data regarding the variety of flow conditions (which include overtopping, through the box culverts and over the broad crested weir).

4.2 Experimental Setup

The apparatus and instruments used in this study described below each in detail.

4.2.1 The Flume

The experiments were done on a toughened smooth glass sided and the bed is smooth painted steel plate flume working length is 12 m. The flume cross sectional area is 50 cm wide and the depth is 50 cm. The two hydraulic jacks which can adjust longitudinal slope of the Flume mechanically by raising and lowering manually to set the required slope. At the downstream end, the flume has a vertical moving tail gate to control the tail-water depth. For fixing the point gages a pair of steel pipe rails

was fixed on the top of the side walls. The upstream end of the flume connected to the stilling basin of internal dimensions (2.5 m length, 0.70 m width and 0.87 m depth) made with smooth thin steel plate, having a serious of alternate mesh screens to dissipate the energy of the incoming overhead tank flow. Water supplied to the flume from an underground concrete storage tank of internal dimensions (7.5 m length, 2.5 m width and 1.0 m depth). by an electrically driven centrifugal pump through a 6 inch diameter steel pipe to the overhead tank of a total discharge of (50 lit/sec). Fig (4.1) and Fig (4.2) show the Flume.

Figure 4.1 The Flume used in the study

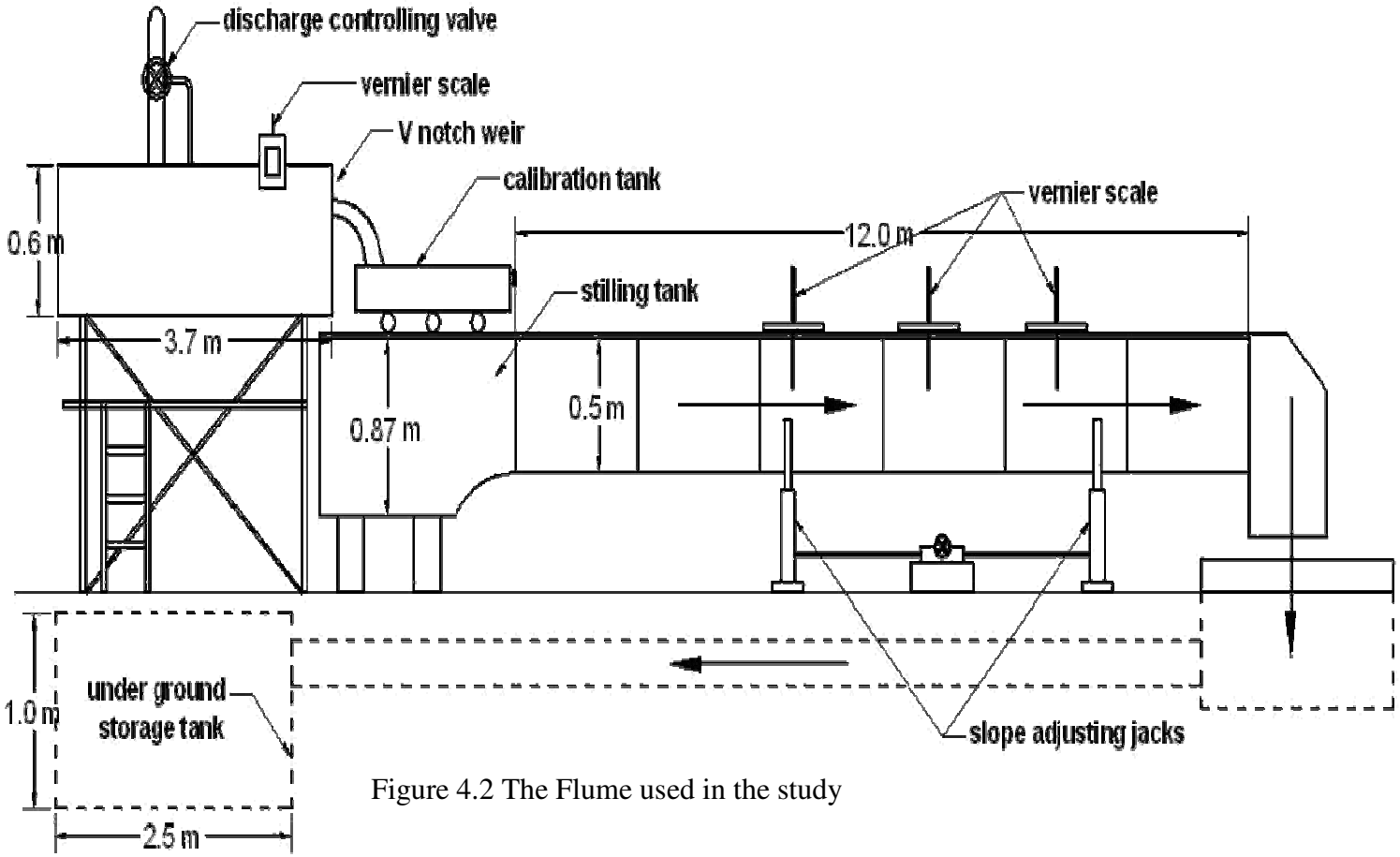

Figure 4.2 The Flume used in the study

4.2.2 The Overhead Tank

It is box shape tank having internal dimensions 3.7 m length, 0.8m width and 0.6 m depth, made from thick steel plate elevated to the required height on a steel frame. Pumped water into the overhead tank passes through a number of alternate mesh screens to dissipate its turbulence and energy before reaching the V-notch weir upstream and overflowing to the flume, to control the discharge there is two control valves one of 6" dia. and the another of 1.5" dia.

Figure 4.3 The Overhead tank and the V-notch weir used in the study

4.2.3 The V-notch weir

The Flume discharge was measured by V-notch weir (Fig (4.4)) located at the end of the overhead tank. The head of water above the V-notch was measured by a point gage with a vernier (metal tube) scale of 0.05mm accuracy located 80 cm upstream of the V-notch weir placed in a small box tank fixed to the side of the overhead tank and connected to the overhead tank so that the water depth in the side tank and the overhead tank are the same and the water surface is in static condition.

Figure 4.4 Details of the V- notch weir

4.2.4 The Measuring Tank

A box shape tank manufactured for calibrating the head-discharge relation of the V-notch weir, having internal dimensions (1.5 m length, 1 m width and 0.3 m height) to store about 300 litres, the tank have(three rollers in each side) to make it's movement easier. shown in figure.(4.5).

The calibration tank placed downstream of the V-notch weir. In each run the volume of water, time (by a stop watch of 0.01 sec accuracy) and the head above the V-notch was recorded.

Figure 4.5 The measuring tank for the calibration of the V-notch weir flow

For several water depths above the V-notch weir between (5 to about 26 cm), the measuring tank placed under the V-notch weir slot and for enough volume of water

the time was recorded, by repeating this procedure two times for each depth of water above the V-notch and the data Table (4.1), plotted to the curve shown in Fig (4.6), and the following relation was determined which has a determination coefficient (R^2) of 0.995.

$$Q = 0.0195h_v^{2.398}$$

Where: Q: discharge in *l*/sec, and; hv: head of water above the V-notch weir in cm.

Table 4.1 Calibration Data of the V-notch weir.

	Trial one			*Trial two*			*Average*
h_v*(cm)*	*time (sec)*	*volume (l)*	Q_1 *(l/sec)*	*time (sec)*	*volume (l)*	Q_2 *(l/sec)*	*Ql/sec*
0			0.00000			0.00000	0
5.135	235.75	231.45	0.98176	285.54	282.1	0.98795	0.98486
9.345	57.53	220.725	3.83669	72.54	274.205	3.78005	3.80837
11.955	29.75	272.925	9.17395	32.84	307.643	9.36794	9.27094
15.03	16.54	201.032	12.15429	18.75	221.794	11.82901	11.99165
16.415	17.02	281.954	16.56604	16.33	245.725	15.04746	15.80675
17.985	14.56	289.068	19.85357	12.44	232.664	18.70289	19.27823
19.605	11.43	257.487	22.52730	10.03	249.432	24.86859	23.69795
21.765	7.56	232.783	30.79140	7.02	245.001	34.90043	32.84591
23.385	6.25	230.475	36.87600	7.42	243.695	32.84299	34.85950
24.685	5.72	243.895	42.63899	3.96	160.168	40.44646	41.54273
25.87	5.35	271.789	50.80168	7.02	342.999	48.86026	49.83097

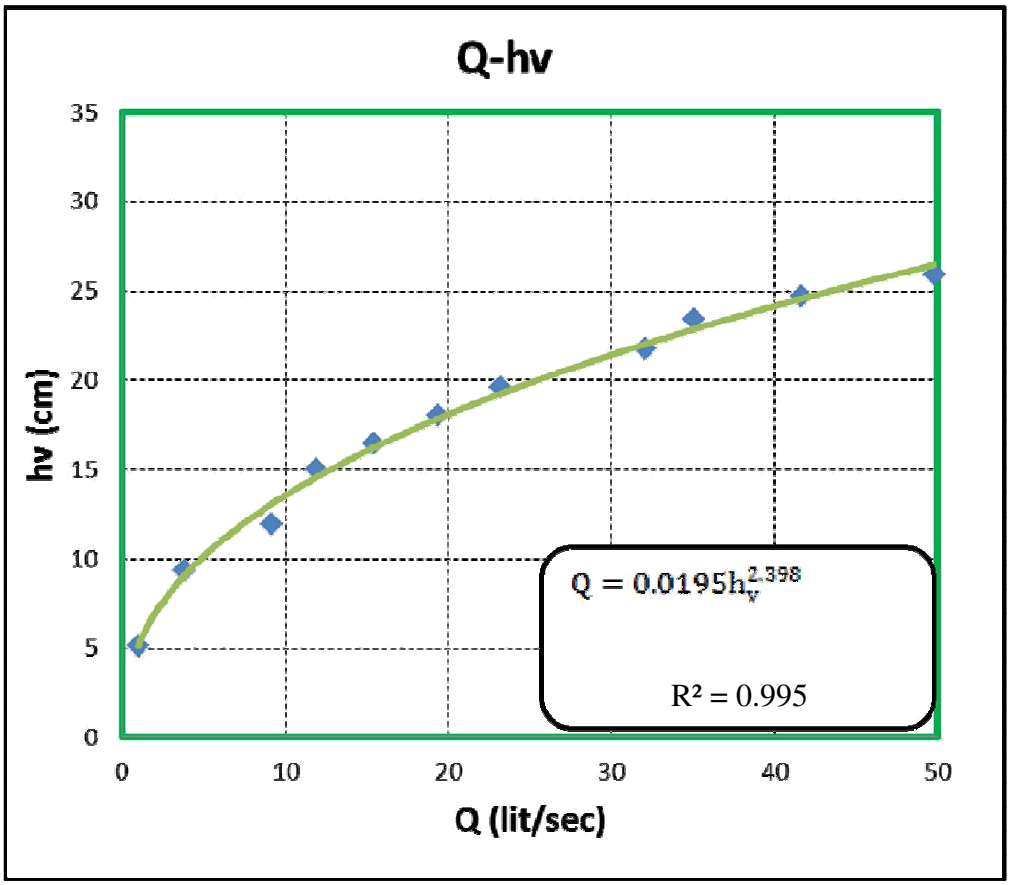

Figure 4.6 Calibration curve of the V- notch weir

4.2.5 Point Gages for Depth Measurement

The water depth along the test flume was measured by three accurate gauges figure (4.7). The vernier scale of the point gages allows depth readings with an accuracy of 0.05 mm. The point gauges were set on a carriage which moved on two rails fixed on the top of the side walls of the flume. This crossing arrangement enables freedom of movement and enabled the gage reading at any arbitrary point along the flume.

Figure 4.7 Point gauges with its carrier

4.3 Construction of the Models

The selection of models material and dimensions depend on the facilities of the laboratory and for minimize models roughness models were constructed from glass and fixed with adhesive materials like silicon.

Figure 4.8 One of the models

Numbers of constructed models are (twelve), these models divided into (4) groups of same culvert dimensions but each group have three different side slopes of the weir (tan θ).

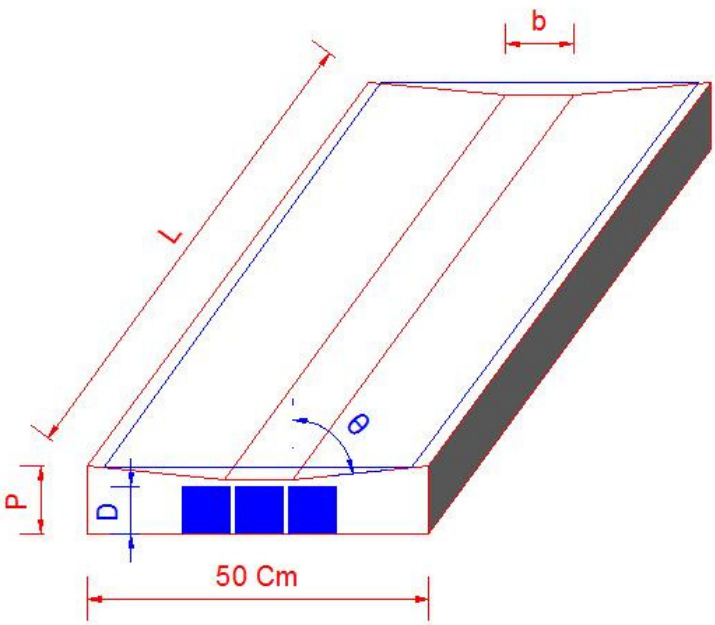

Figure 4.9 Dimensions and symbols of the models

4.4 Testing Procedure

Firstly, the flume leveled by using level instrument to make the longitudinal bed slop set to zero. Models placed at a distance of (9 m) from the upstream end, the models assembled in the canal and fixed with the flume sides by a special paste to prevent seepage of water.

For each model, the testing program was done in three phases:

1. Only flow through the culvert, this was achieved by fixing a play wood block piece on the upstream top corner of the model to prevent flow over the weir.
2. Only flow over the weir, this was achieved by closing inlet of the culvert.
3. Flow through the culverts and over the weir.

In each case of flow the discharge is increased gradually such that the behavior of the flow is clearly be recognize, a number of runs done for each flow case. For each run, the depth of water above the V-notch weir (hv) and the uniform water depth in the canal upstream of the tested model (yo) were measured. Table 4.2 shows Numbering and Dimensions of the models .

Table 4.2 Numbering and Dimensions of the models.

Model No.	Hc (cm) *Wc (cm)	b (cm)	θ
1	4*4	50	0
5		10	6°
9		10	9°
2	6*6	50	0
6		10	6°
10		10	9°
3	8*8	50	0
7		10	6°
11		10	9°
4	10*10	50	0
8		10	6°
12		10	9°

CHAPTER 5

DATA ANALYSIS AND DISCUSSION OF RESULTS

5.1 General

Developing an equation for discharge coefficient (C_d) is the main objective of data analysis as a function of parameters which obtained from dimensional analysis performed in Chapter three for each of the three flow states (culvert, weir and combined flow),for this issue use several equation forms, then by using SPSS® program choose the best one having best hydraulic characteristics mainly we use which model having greater coefficient of discharge(Cd).Detailed data in the appendixes.

5.2 Head - Discharge Relations

Measurements of open channel flow typically depend on measurements of flow depth, which are then correlation done with head-discharge curves. Flow measurement in open channels is necessary for improving the management of limited water supply. Accurate measurement practices help to provide a fair distribution of water between increasing demands. Most flow measurement structures are placed in a channel. They are used to determine the discharge indirectly from measurements of the flow depth. In combined structures, it is expected that there is always a cut out in the head-discharge rating at the point that the flow begin to overflow the upper structure and the flow behavior changes from culvert flow to the combined flow. The head-discharge relations for each model are plotted into three curves for the three flow states (culvert, weir and combined) as shown in Fig (5.1).

It may be noted from the figures that at a given head (Y), adding the flow through the culvert to the flow over the weir equal to the combined flow measurements.

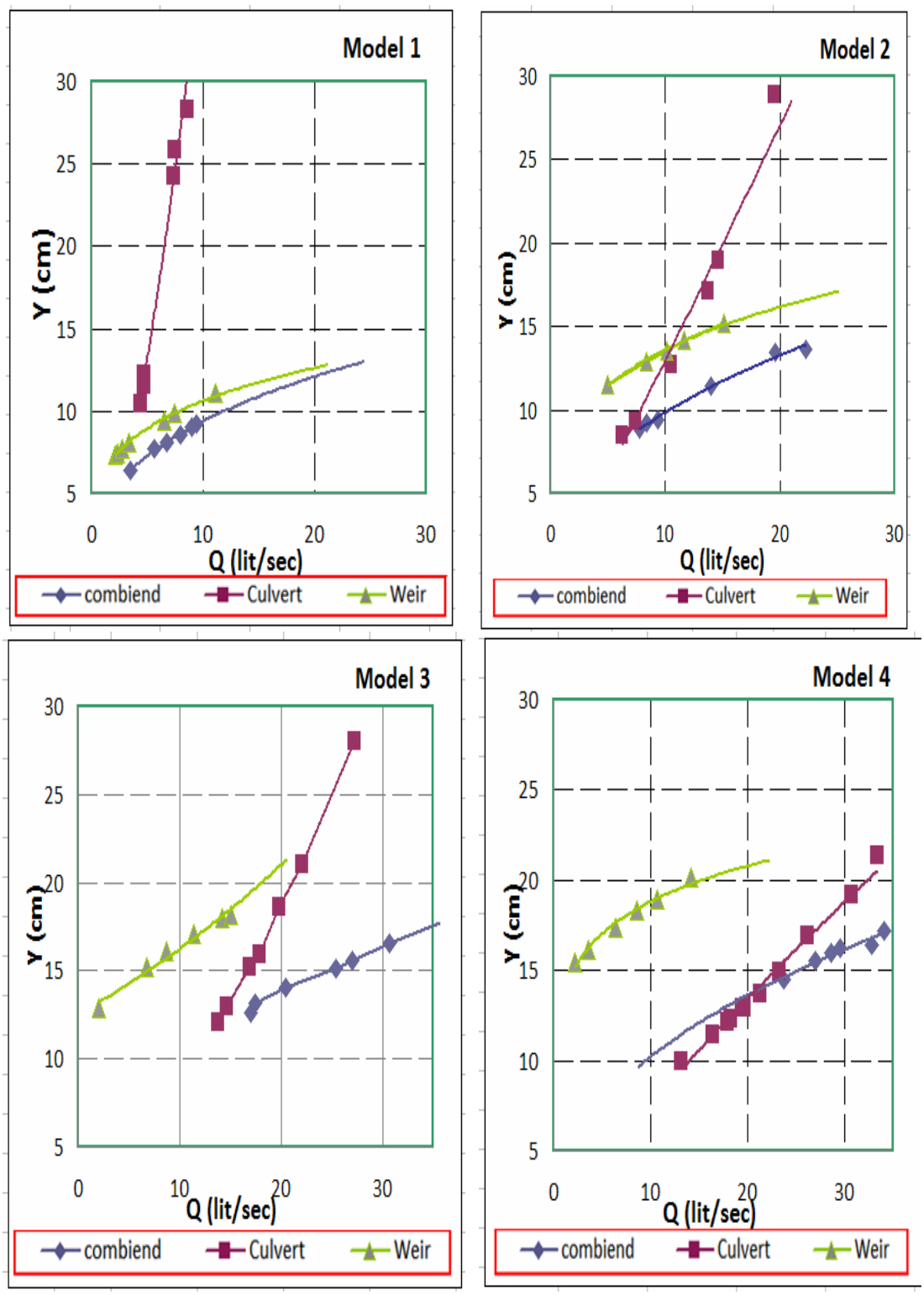

Figure 5.1 Head Discharge Relations for Models 1-4

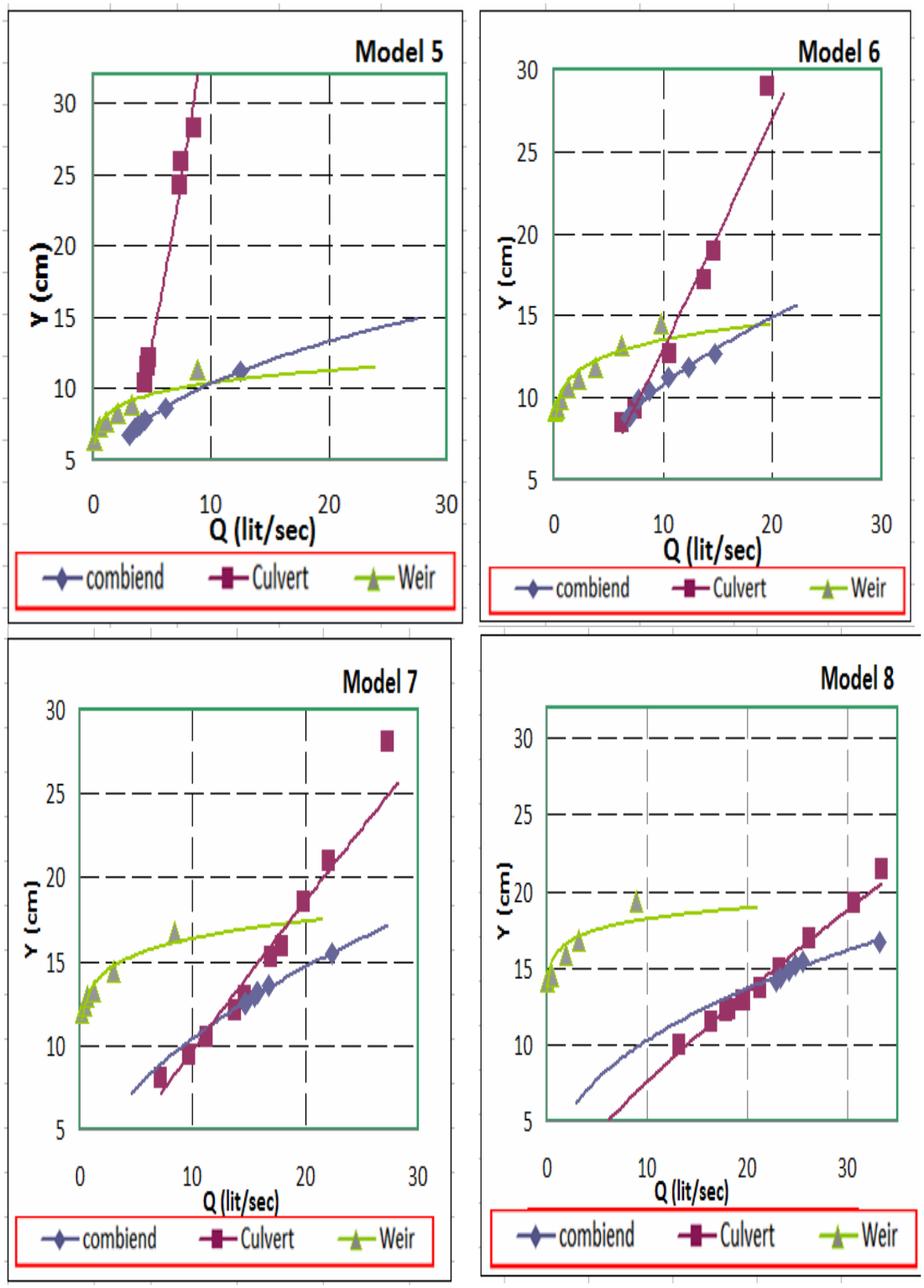

Figure 5.1 Continued, Head Discharge Relations for Models 5-8

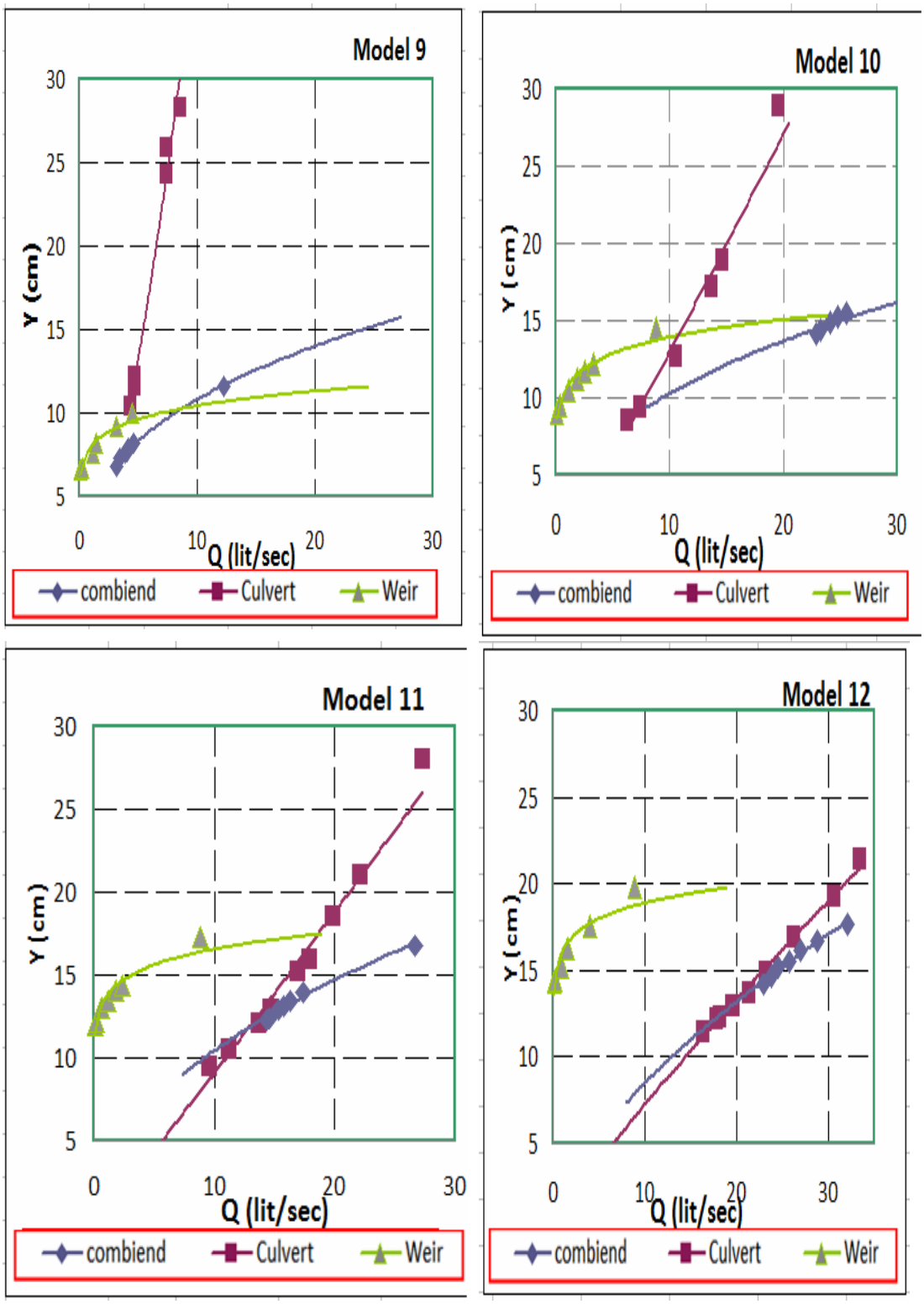

Figure5.1 Continued, Head Discharge Relations for Models 9-12

The intersection points between culvert curves and broad crested weir curves showed in Fig (5.1) indicate that at these points both discharges are equal, below these

intersection point the culvert discharge are greater than broad crested weir discharge, and above it the weir discharge is greater, and in both cases cumulating the weir and culvert discharge equals the combined structure discharge at a certain head (Y).

5.3 Effect of Weir Height (P)

There is not easy to determine the effect of weir height (P) in the case of the combined structure flow, while it contains the bottom part (culvert) and the culvert height varies with the weir height. So it was studied in the state of weir flow only. The discharge values of weir models having the same lower weir crest width (b) and the same side slope angles (θ), but the difference in weir crest heights(P), were considered as a single data group and were plotted against the total head (H) in Fig (5.2) for observing the effect of (P) on the discharge coefficient. Coincides of curves of different values of (P) indicates that there is no direct important relation between weir height (P) and (Q).

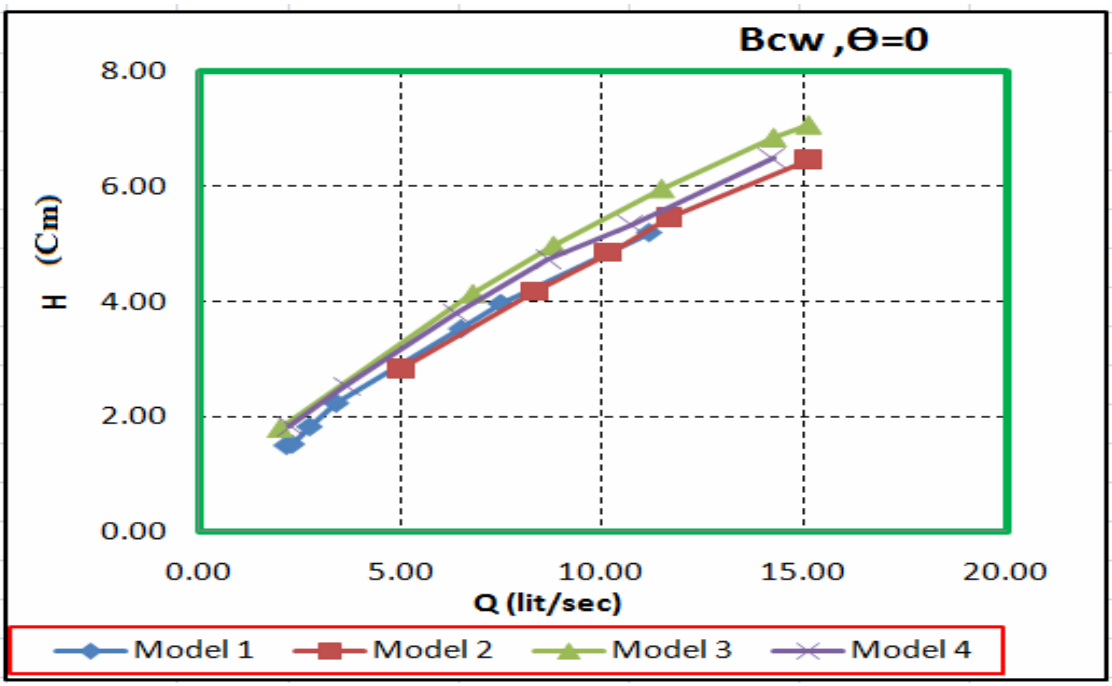

Figure 5.2 Effect of weir height (H) on the Discharge for the BCW

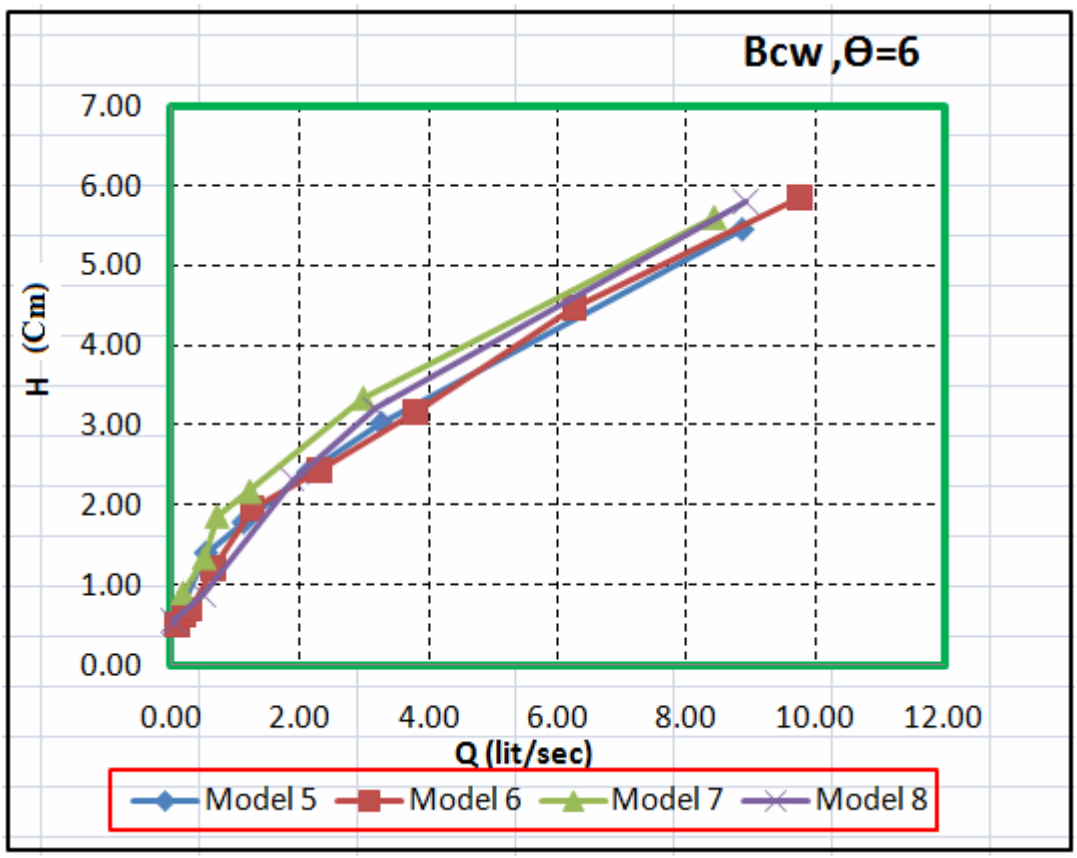

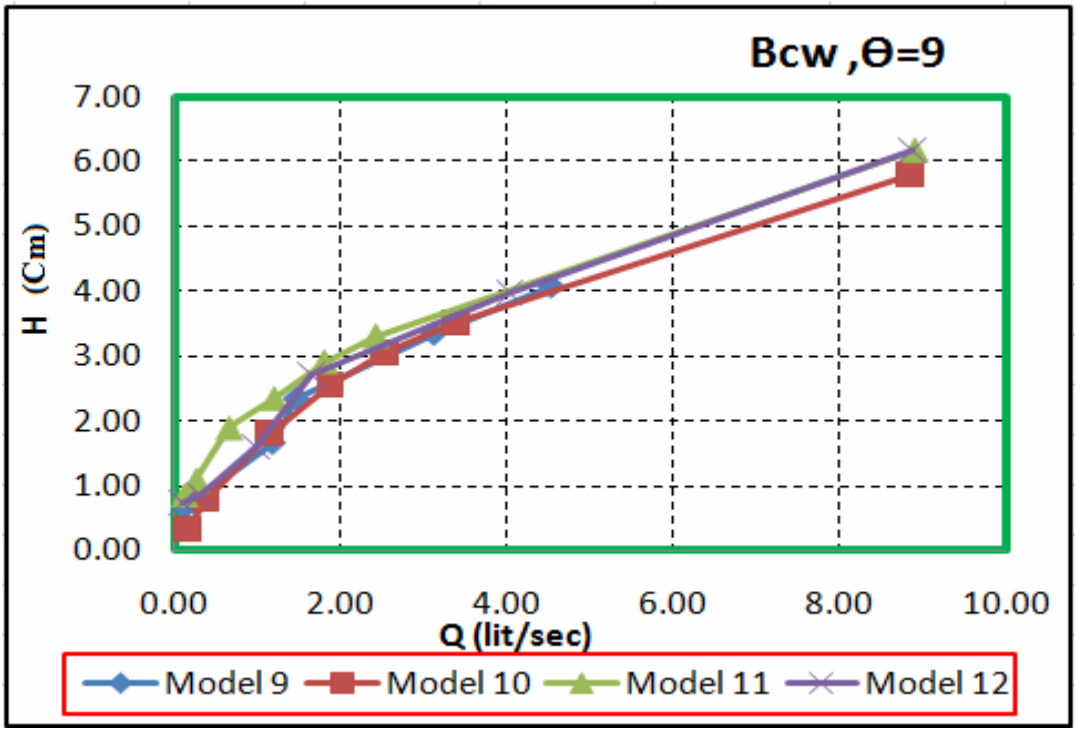

Figure 5.2 Continued, Effect of weir height (P) on the Discharge for the BCW

5.4 Effect of the Side Slope (θ)

The side slope effect (θ) was analyzed by drawing a relation between the discharge coefficient (C_d) and the ratio of the head above the weir to the crest height (H/P) for all the tested angles of weir side slopes (θ) as shown in Fig (5.3).

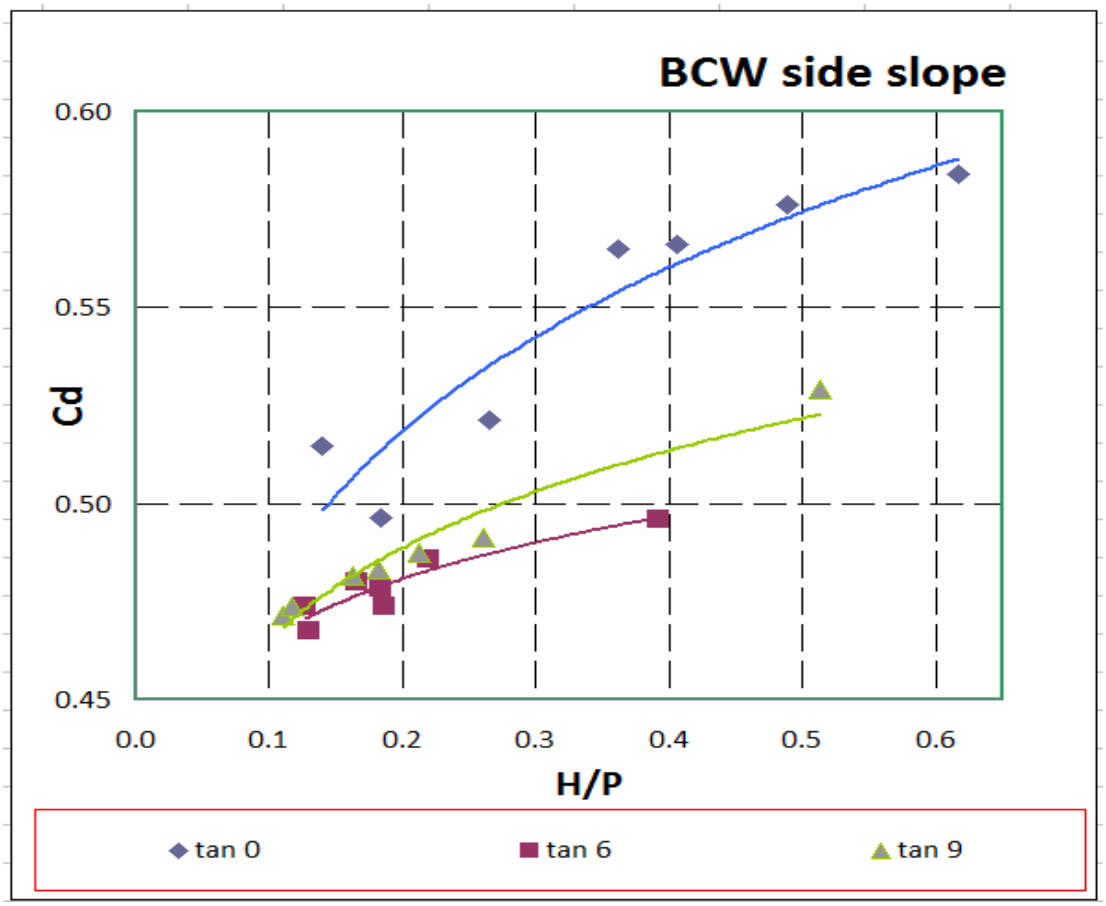

Figure 5.3Side slope effect on the Discharge coefficients for the various models of the combined structure

Curves of Fig (5.3) show that for a certain value of (H/P) the (Cd) value increases with decreasing in the side slope angles, this is because of decreasing the wetted parameter with decreasing in side slope angles (tanθ).

5.5 Effect of the Culvert Dimension (D)

The discharge coefficient (Cd) plotted against the ratio of upstream water depth to the culvert diameter (Y/D) together with the data obtained from the literature[Table (5.1)] for the same culvert flow condition, as shown in Fig (5.4).

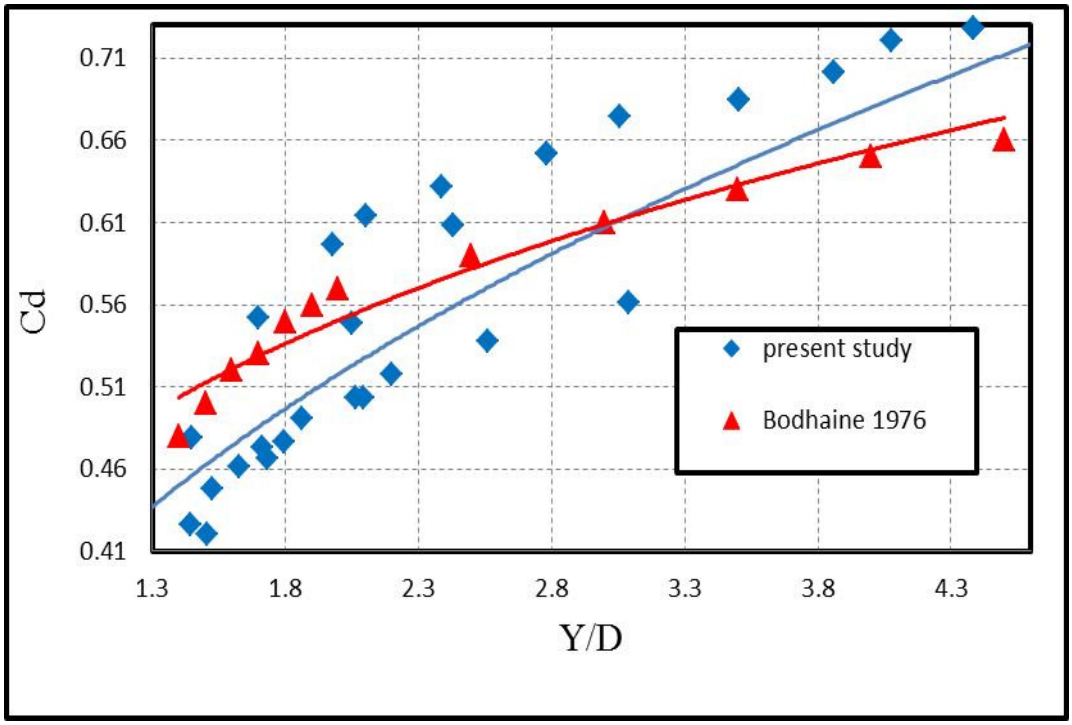

Figure 5.4 Head Discharge Coefficient Relations for culvert flow

Table 5.1 Coefficient of discharge as a function of Y/D for type 5 flow in a culvert with a flared – pipe end section [31]

Y/D	Cd	Y/D	Cd
1.4	0.48	2.0	0.57
1.5	0.50	2.5	0.59
1.6	0.52	3.0	0.61
1.7	0.53	3.5	0.63
1.8	0.55	4.0	0.65
1.9	0.56	4.5	0.66

For the effect of the box culvert dimension investigate, the discharge coefficient (Cd)

plotted against the upstream water depth (Y) for the box culvert dimension used in the study as shown in Fig (5.5), which indicates that the discharge coefficient (Cd increases with a decrease in the culvert dimensions for a certain upstream water depth (Y).

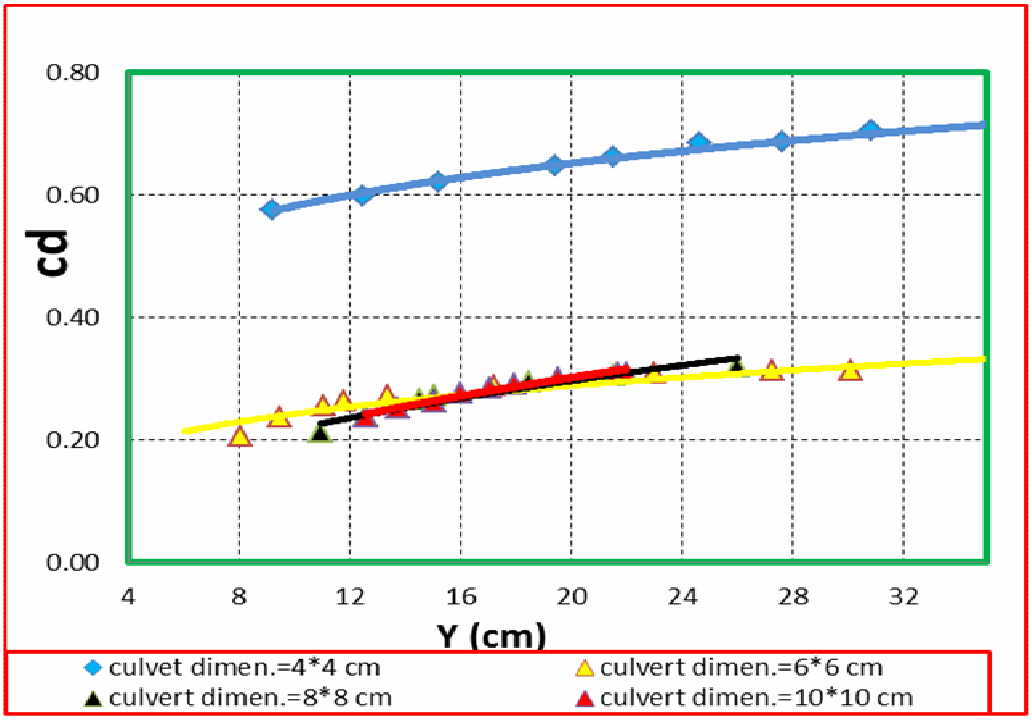

Figure 5.5 Head Discharge Coefficient Relations for culvert flow

It can be indicate from Fig (5.5) that (Cd) increases with (Y/D) for the culverts, this can be explained by the following reasons:-

1. An increase in the head (*Y*) reduces the viscosity effect which increase the boundaries resistance of the flow.
2. At low values of (*Y*) the effect of surface tension is clearly seen which make water particles clinging to the structure body which cause decreasing the velocity of flow and the value of (C_d).
3. For constant value of (*Y*) the ratio of (*Y/D*) can be increased by reducing the value of (*D*) which also leads to increase the discharge coefficient (C_d) which can be seen clearly from Fig (5.6), this is because the decrease in culvert dimensions decreases its parameter and then decrease in boundary resistance

5.6 Correlations for Discharge Coefficient (Cd)

To obtain equations for the discharge coefficient (Cd), (SPSS20®) statistical software was used for obtaining two types of regressions between the discharge coefficient (Cd) and dimensionless parameters obtained by dimensional analysis were tested to find the best one, they are:

1. Linear relationship between (C_d) and the rest of the parameters:

$$Cd = a + b\pi_2 + c\pi_3 + d\pi_4 + e\pi_5 + f\pi_6 \tag{5.1}$$

Where (a) to (f) are regression coefficients to be obtained from a multivariable regression of the experimental data.

2. Power function relationship between (C_d) and the rest of the parameters:

$$Cd = a(\pi_2)^b(\pi_3)^c(\pi_4)^d(\pi_5)^e(\pi_6)^f \tag{5.2}$$

Where (a) to (f) are regression coefficients to be obtained from a multivariable regression of the experimental data.

5.6.1 Discharge Coefficient Regressions for the Culvert

The linear regression yielded the following equation:

$$C_d = 0.451 - 0.38\frac{Y}{L} + 0.087\frac{Y}{D} \tag{5.3}$$

R Squared=0.851

The power regression yielded the following equation:

$$C_d = 0.271\frac{\left(\frac{Y}{D}\right)^{0.5}}{\left(\frac{Y}{L}\right)^{0.252}} \tag{5.4}$$

R Squared=0.941

5.6.2 Discharge Coefficient (Cd) for the Broad Crested Weir

The multivariable linear regression yielded the following equation

$$C_d = 0.422 + 0.041\frac{H}{P} - 0.039\frac{H}{b} + 0.213\frac{H}{L} - 0.001\tan\theta \tag{5.5}$$

R Squared=0.47

The multivariable power regression yielded the following equations:

A- For tan(θ) =0.

$$C_d = 0.553\frac{\left(\frac{H}{P}\right)^{0.08}\left(\frac{H}{b}\right)^{2.911}}{\left(\frac{H}{L}\right)^{2.48}} \tag{5.6}$$

R Squared=0.832

B- For tan(θ) >0.

$$C_d = 0.384\frac{\left(\frac{H}{P}\right)^{0.08}\left(\frac{H}{b}\right)^{0.185}}{\left(\frac{H}{L}\right)^{0.068}}(\tan\theta)^{0.183} \tag{5.7}$$

R Squared=0.324

$$C_d = 290.5 + 0.069\frac{H}{P} + 0.672\frac{H}{b} - 1.786\frac{H}{L} - 245.7\tan\theta - 0.02\left(\frac{H}{P}\right)^2$$

$$-0.52\left(\frac{H}{b}\right)^2 + 8.976\left(\frac{H}{L}\right)^2 + 52.75(\tan\theta)^2 \quad \text{…….(5.8)}$$

R Squared=0.65

5.6.3 Discharge Coefficient (Cd) for the Combined Structure

The multivariable linear regression yielded the following equation:

$$C_d = 0.490 - 1.452\frac{H}{P} - 0.072\frac{H}{b} + 1.032\frac{H}{L} + 1.028\frac{H}{D} - 0.016\tan\theta \tag{5.9}$$

R^2=0.712

The multivariable power regression yielded the following equations:

A- For tan(θ) =0

$$C_d = 0.854\frac{\left(\frac{H}{P}\right)^{1.234}\left(\frac{H}{L}\right)^{0.888}}{\left(\frac{H}{b}\right)^{0.410}\left(\frac{H}{D}\right)^{1.234}} \tag{5.10}$$

R^2 =0.744

B- For tan(θ) >0.

$$C_d = 0.421\frac{\left(\frac{H}{b}\right)^{0.022}\left(\frac{H}{L}\right)^{0.085}\left(\frac{H}{D}\right)^{1.812}}{\left(\frac{H}{P}\right)^{1.825}}(\tan\theta)^{0.05} \tag{5.11}$$

R^2 =0.693

After regressions were done, the data plotted to charts of Figures (5.6), (5.7) and (5.8) which shows the relation between the measured discharges versus the discharges that predicted by applying regression equations to the experimental data.

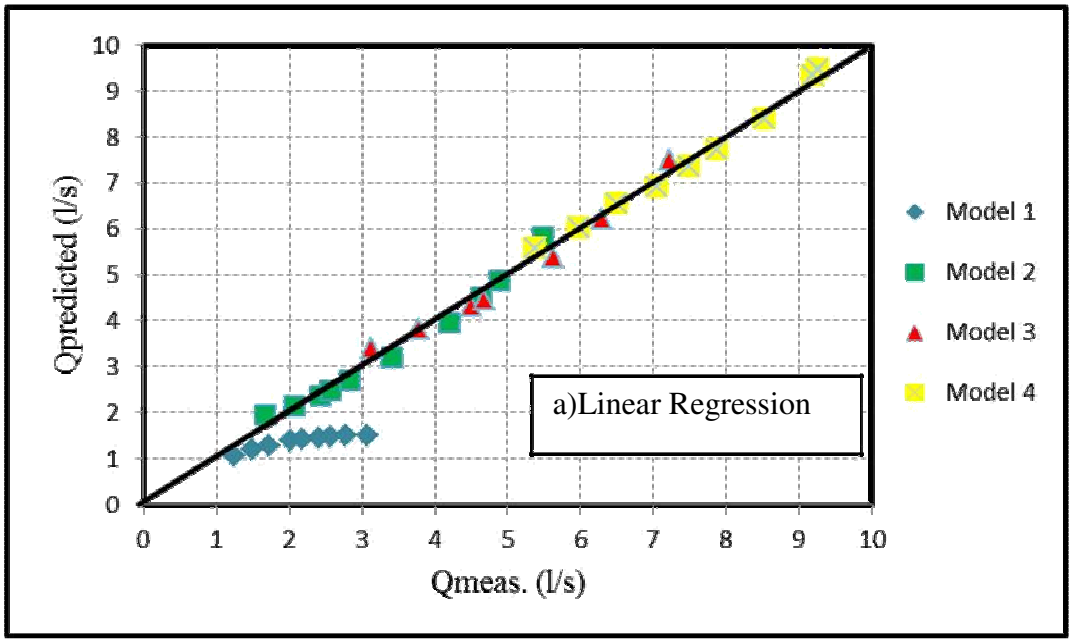

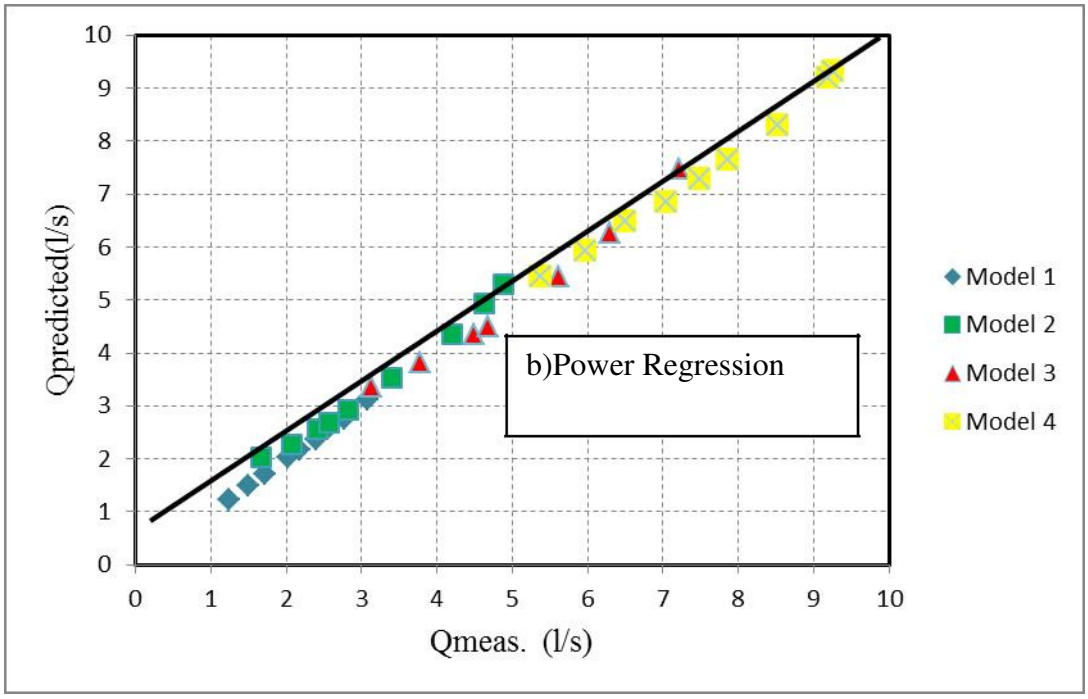

Figure 5.6 Relation between measured and predicted discharges for the culvert
(a) Linear regression (b) power regression

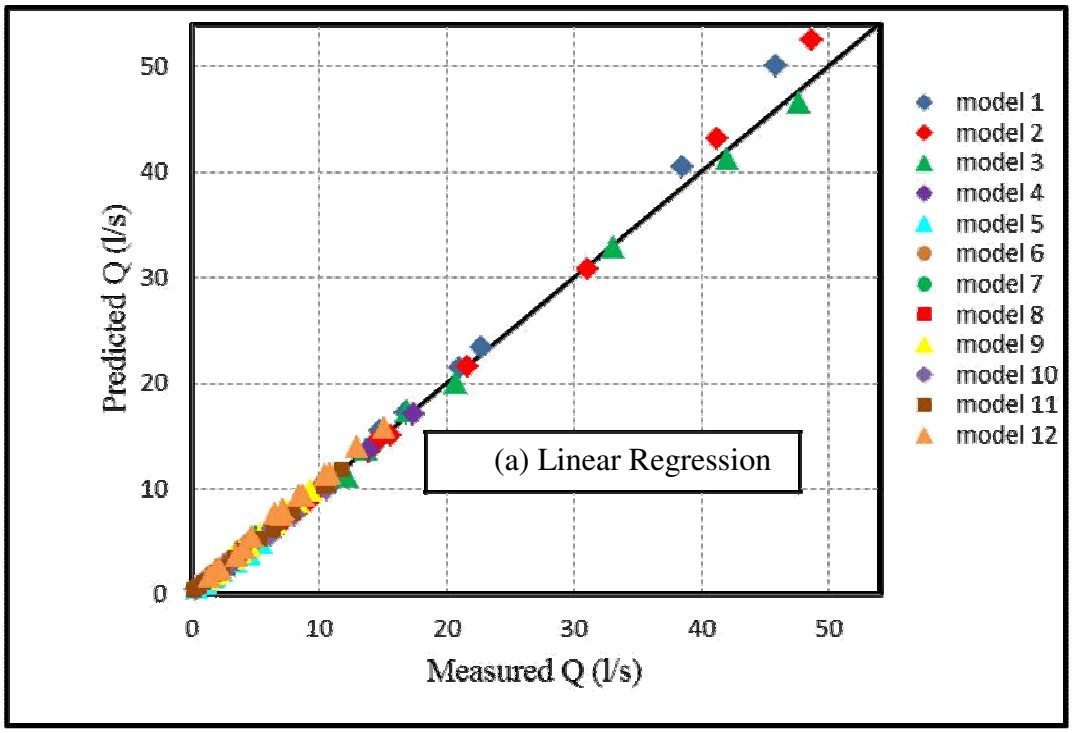

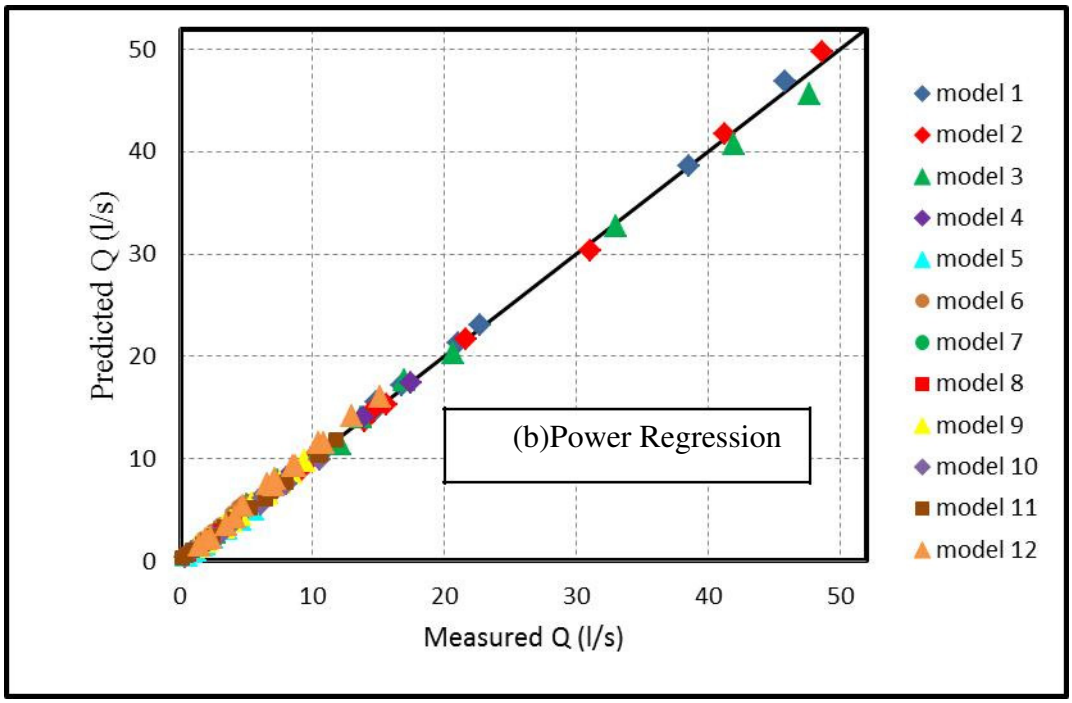

Figure 5.7 Relationship between measured and predicted discharges for the BCW (a) Linear regression (b) power regression

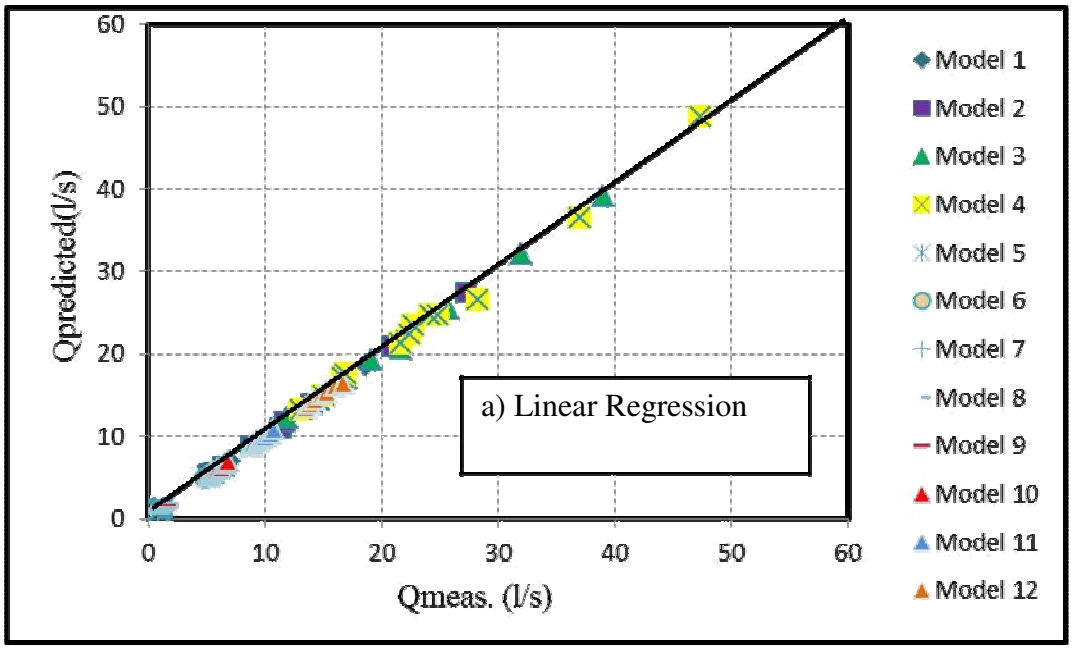

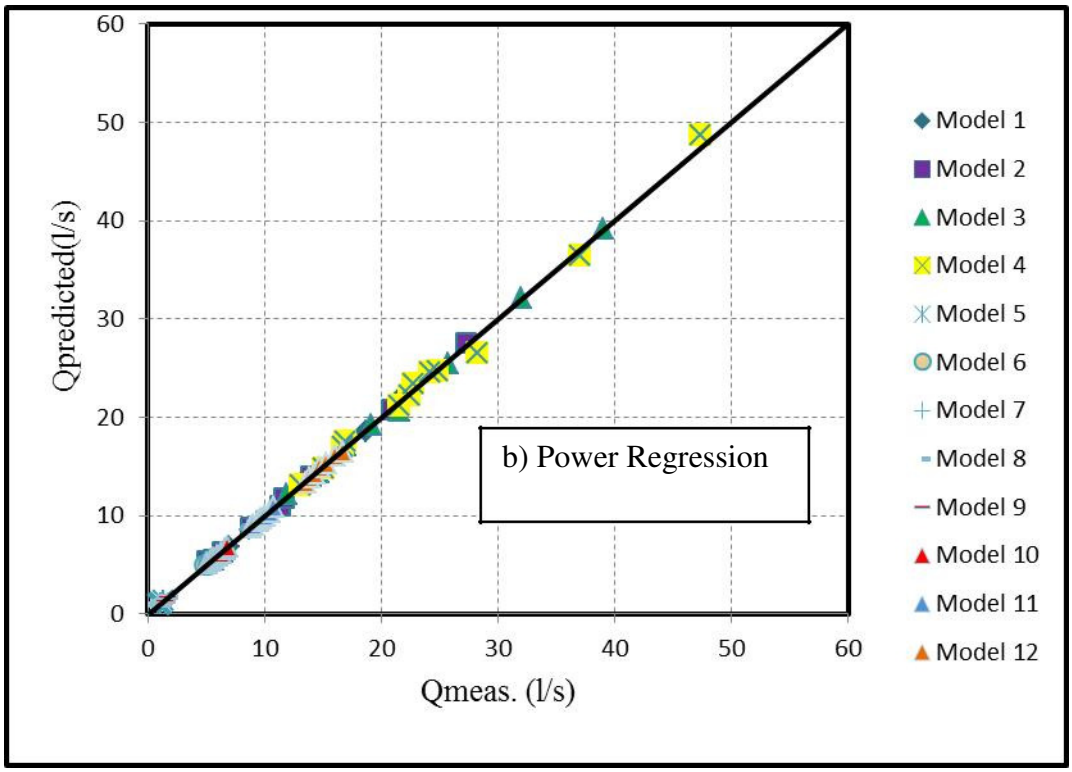

Figure 5.8 Relationship between measured and calculated discharges for the combined structure (a) linear regression (b) power regression

In order to illustrate the variation of discharge coefficients (Cd) with the dimensionless parameters related with it, for each model (Cd) plotted against (H/P), (H/Y), (H/D) and (H/L) as shown in Fig (5.9).

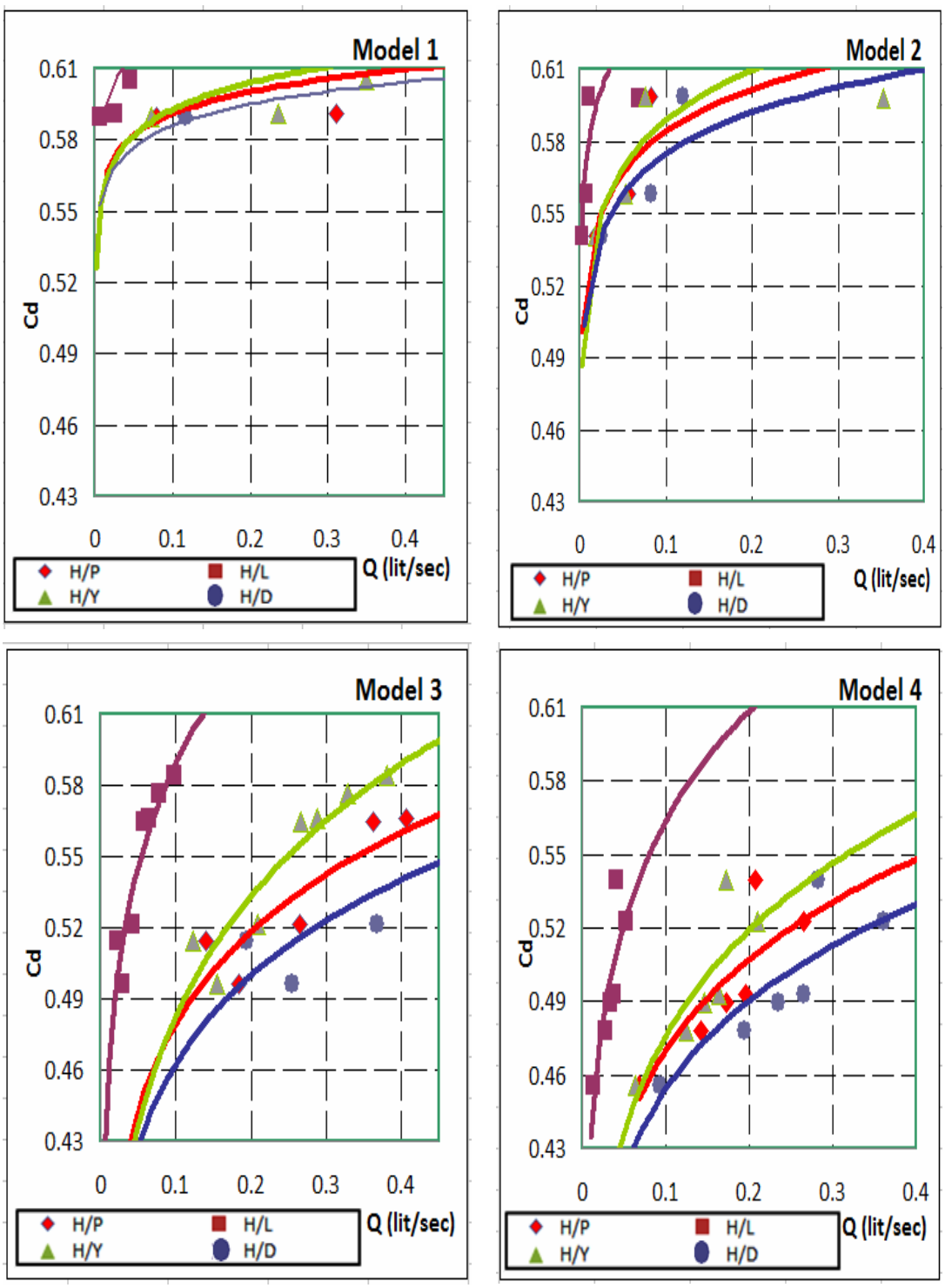

Figure 5.9 Variation of (Cd) with (H/P), (H/Y), (H/D) and (H/L) for models 1-4

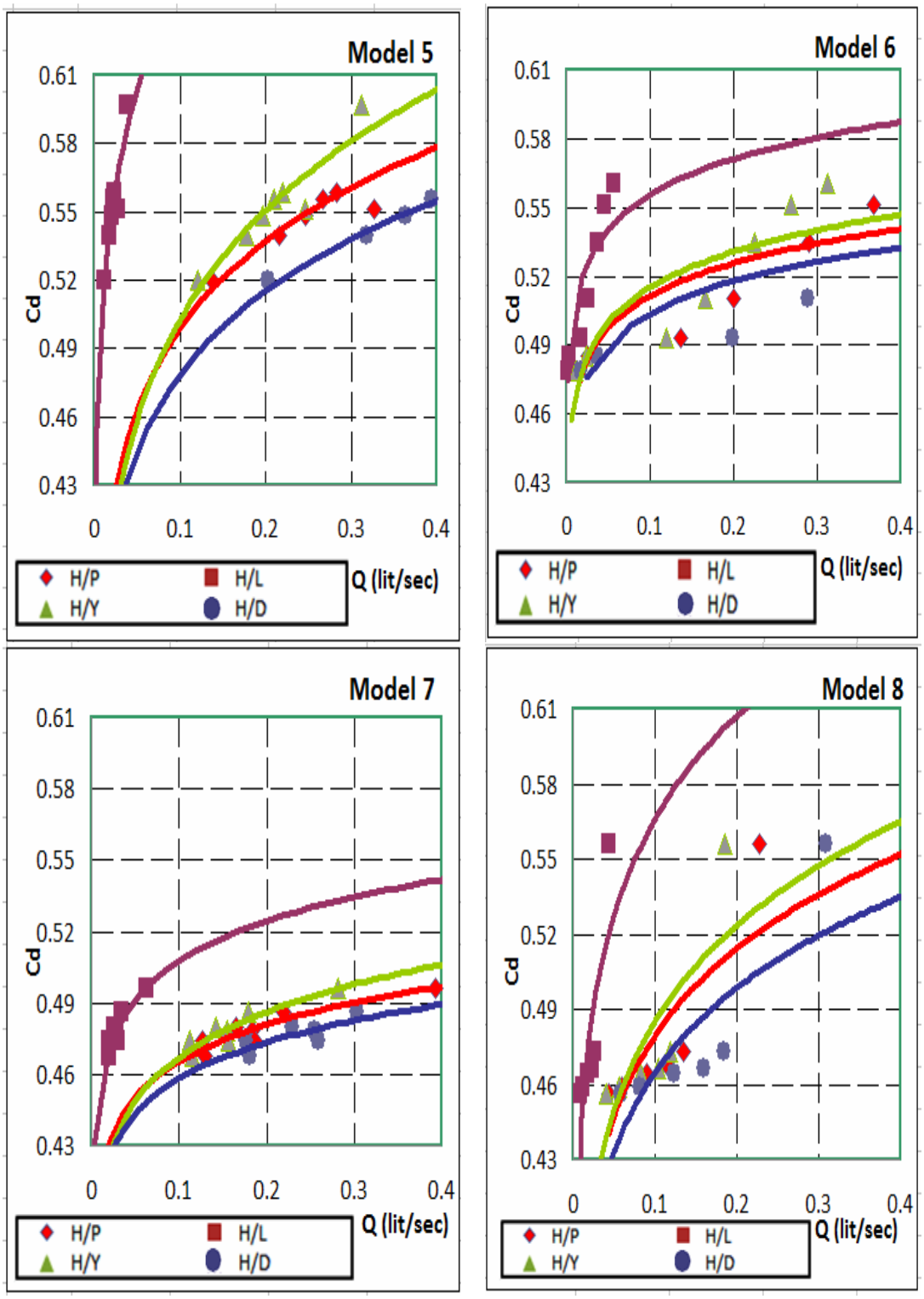

Figure 5.9 Continued, Variation of (Cd) with (H/P), (H/Y), (H/D) and (H/L) for models (5-8)

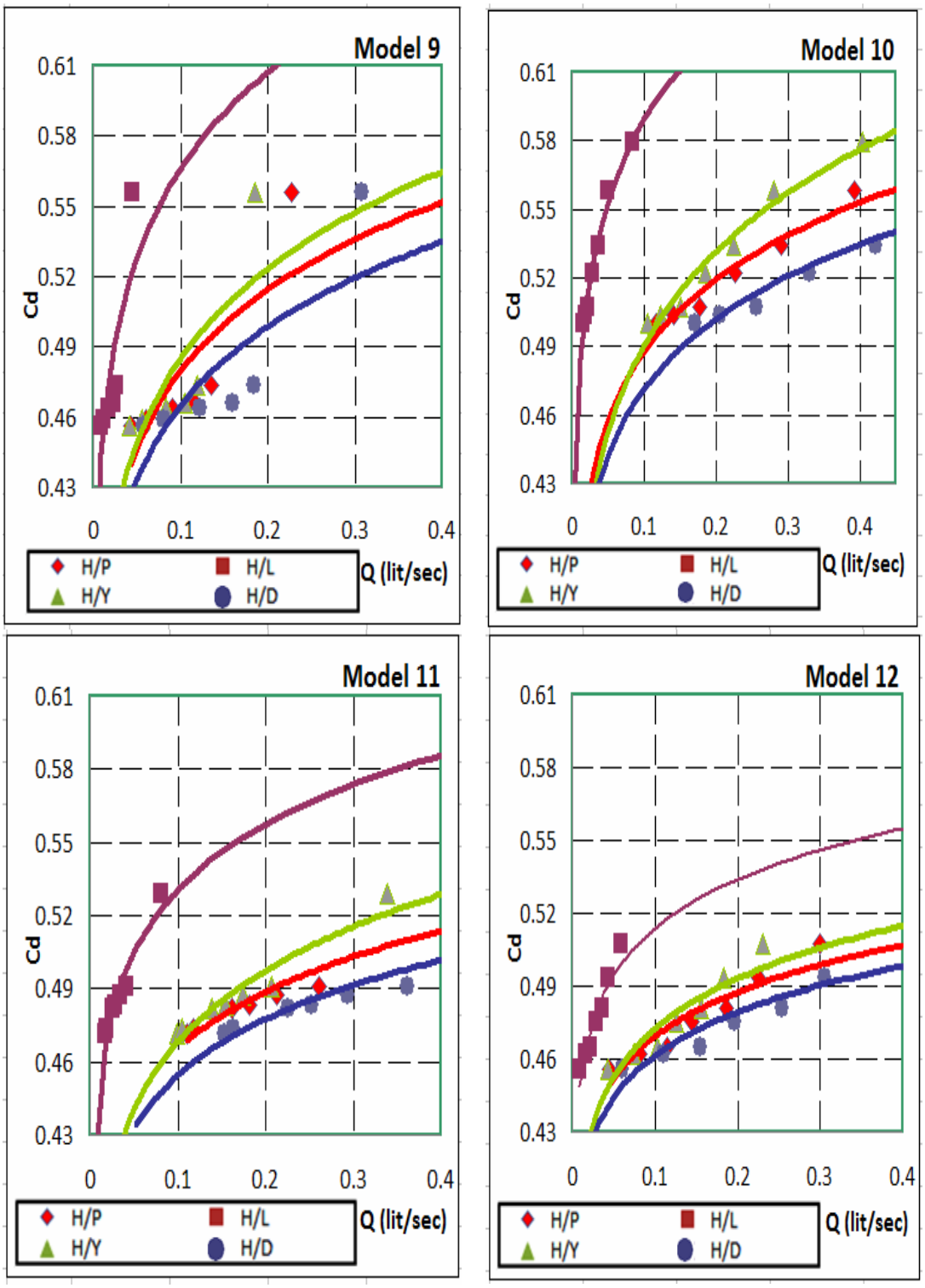

Figure 5.9 Continued, Variation of (Cd) with (H/P), (H/Y), (H/D) and (H/L) for models 9-12

CHAPTER 6

CONCLUSIONS AND RECOMMENDATIONS

6.1 General

This research contains a series of laboratory experiments conducted for investigation the effect of interaction of flow over broad crested weir and multi-cell box culverts on the discharge coefficient. The effect of the total head of water upstream of the combined structure (Y), the weir crest height (P), the weir crest width (b), angle of weir side slopes (θ), of the broad crested weir and internal dimension of the culvert (D), on the discharge coefficient (Cd) were studied.

6.2 Conclusions

There are several conclusions extracted from the analysis of the experimental findings of the study [26],[27],[28] as below:

1. It was observed that for a certain head (Y), the simultaneous discharge passed through the combined structure (Q_t) equals to combining the discharge through the culvert (Q_c) with the discharge passed over the weir (Q_w) equals.

2. The measured discharge (Q) values taken from the experiments done on the broad crested weirs has no significant relation to the weir height (P) for each group of models having the same cross section shape and crest length (L).

   This conclusion is the same with the results obtained. M. Göğüş, Z. et al. (2006).

3. The value of coefficient of discharge (C_d) increases as the ratio (*H/P*) increases for all the tested models and for each flow state (weir and combined). This conclusion agreed with the results obtained by Amir HosseinAzimi et al (2009), Kassem Salah El- Alfy (2005) .

4. For a certain value of the ratio (H/P), the (Cd) value increases with the decreasing of the angle of weir sides (θ), for all the tested models and for each flow state (weir and combined) .

5. The (Cd) value increases as the ratio (Y/D) increase for all the models tested as culvert flow only, this conclusion agreed with results obtained by (Bodhaine, 1976) .

6. For a certain upstream water height (Y) the discharge coefficient (Cd) values increases with decreasing in the culvert dimension (D) obtained from the experiments performed on the culvert flow.

7. There is good agreement between the measured and predicted discharges for the tested models.

6.3 Recommendations for further Investigations

There is a wide area which requires further study of combined hydraulic structures especially combination of broad crested weirs and multi cell culverts. The following items are recommended for further studies:

1. Studying the characteristics of flow through the combined structure experimentally and using the Computational Fluid Dynamics (CFD) software.

2. Studying the flow characteristics of the combined structure broad crested weir and different shape culverts.

3. Studying the flow characteristics through combined broad crested weir and ellipse and semi-ellipse shape culverts.

REFERENCES

[1] Visual Stream Survey Manual, Chapter (1). Available at: http://www.georgiaadoptastream.org/Manuals_etc/Visual/V_Ch_1.pdf, Accessed 20.09.2012

[2] Thomas McDonald and Mark Anderson-Wilk "Low Water Stream Crossings in Iowa: A Selection and Design Guide" Centre for Transportation Research and Education Iowa State University, February 2003.

[3] A Country Study: Iraq. Available at:http://ancienthistory.about.com/od/aneplacesgeography/qt/climateIraq.htm, Accessed 21.09.2012,Library of Congress Call Number DS70.6 .I734 1990

[4] Iraq facts land &climate .Available at http://www.irag.org.uk/iraqfacts/landclimate.shtml Accessed 18.07.2012

[5] Trans boundary waterways and streams along the Iraq-Iran border lines "the reality and future", Available at http://www.google.com.tr/url?sa=t&rct=j&q=&esrc=s&source=web&cd=1&cad=rja&sqi=2&ved=0CDEQFjAA&url=http%3A%2F%2Fpark.itc.u-tokyo.ac.jp%2Fggwater%2Ftia_project%2Fintlmeet%2Fet_exp_meet3_oct05%2Fali_iraq_iran.pdf&ei=87UVUs30LMfqswajqoCgAg&usg=AFQjCNE8jmKvxb7YI0R96ZHK_jcRfLI3bQ&bvm=bv.51156542,d.Yms. Accesed 11.07.2012

[6] Climate change and flood frequency in the uknick reynard1, Vicente Caselles-Miralles 2, Juan M. Sanchez Tomas 2 and Rafael GarciaLorenzo.Available at http://www.rickly.com/sm/WeirsandFlumes.htm, "Rickly hydrological company" .Accessed 10.08.2012

[7] I. Kaan Tuncok and Larry W. Mays. (2004). "Hydraulic Design of Culverts and Highway Structures", the McGraw-Hill Companies. Chapter 15.

[8] Ehab A. Meselhe and Kirby Hebert (2007). "Laboratory Measurements of Flow through Culverts", ASCE, Journal of Hydraulic Engineering, Vol. 133, No. 8, August 1, 2007

[9] M. Hanif Chaudhry. (2008). "Open-Channel Flow" Second Edition, Springer Science + Business Media, LLC, pp (312).

[10] . A. Osman Akan "Open-Channel Hydraulics" First edition 2006, Elsevier Ltd, pp (212).

[11] Chow, V. T. (1959). "Open Channel Hydraulics", McGraw-Hill Book Com., New York, N. Y, pp (496).

[12] Bos. M.G. (1976)."Discharge measurement structures", Oxford & IBH publishing Co. New Delhi.

[13] Subramanya, K. (1986). "Flow in open channels", 1st revised edition, Tata McGraw Hill Published Company Ltd., New Delhi, India, pp 227-238.

[14] P. Novak, A.I.B. Moffat and C. Nalluri, (2007). "Hydraulic Structures" Fourth Edition, Pavel Novak, Iain Moffat, the estate of Chandra, pp (433).

[15] Breusers, H.N.C. and Raudkivi, A.J. , (1991). Scouring, IAHR "Hydraulic Structures Design Manual", Vol. **2**, Balkema, Rotterdam.

[16] Kandaswamy P. K. and Hunter Rouse, (1957). "Characteristics of flow over terminal weirs and sills" *Proc. ASCE, Hydraulic Division* , Vol. **83**, HY4.

[17] Govinda Rao, N. S., and Muralidhar, D. (1963). "Discharge characteristics of weirs of finite crest width" La Houille Blanche, 18(5), 537-545.

[18] Amir HosseinAzimi and N. Rajaratnam, (2009). "Discharge characteristics of weirs of finite crest length", *ASCE*, *Journal of Hydraulic Engineering.*

[19] Kindsvater, C.E. and R.W. Carter, (1957). "Discharge Characteristics of Rectangular Thin Plate Weirs" *ASCE, Journal of Hydraulic Engineering*, Vol. **83**.

[20] A. Khosrojerdi, M.R. Kavianpour, (2002). "Hydraulic behaviour of Straight and Curved Broad Crested Weirs", *5th International Conference on Hydro-Science and Engineering,* Warsaw, Poland.

[21] Abdel-Azim M. Negm. (2002). "Analysis and modeling of simultaneous flow through box culverts and over contracted broad-crested weirs" *Proc. of 5th International Conference on Hydro-science and Engineering.ICHE.*18-21. Warsaw, Poland.

[22] R. E. Featherstone & C. Nalluri.(1982; 1988; 1995). "Civil Engineering Hydraulics", Blackwell Science Ltd.

[23] Hubert Chanson. (2004). "The Hydraulics of Open Channel Flow: An Introduction" Second edition, Hubert Chanson, pp (28).

[24] French, R.H. (1986). "Open channel Hydraulics", 1st edition, McGraw Hill Book Company, New York, USA, pp (336), page 368-384.

[25] Weber, N. B. (1971). "Fluid Mechanics for Civil Engineers", Chapman and Hall, London.

[26] M. Göğüş, Z. et al.,. (2006). "Broad-Crested Weirs with Rectangular Compound Cross Sections" *ASCE, Journal of Irrigation and Drainage Engineering*, Vol. 132, No. 3.

[27] Kassem Salah El-Alfy. (2005). "Effect of Vertical Curvature of Flow at Weir Crest on Discharge Coefficient" *9th International Water Technology Conference, IWTC9*, Sharm El-Sheikh, Egypt.

[28] Bodhaine, G. L. (1976). "Measurement of peak Discharge at Culverts by Indirect Methods" Techniques of Water Resources Investigations of the United States Geological Survey, Book 3, chapter A3, U.S. Geological Survey, Washington.

APPENDICES

Appendix A: Sample of Calculation

Sample of calculation for Model (2), test run (3) as combined structure flow:

From the equation of the V-notch weir for (h_v=13.1 cm):

$$Q_{meas.} = 0.0195(13.1)^{2.398} = 9.316 \text{ l/Sec}$$

Approach velocity in the Flume upstream of the test Model (v_o) for (y_o=10.04 cm) & width of the Flume (B=50 cm):

$$v_o = \frac{Q_{meas.}}{B * y_o} = \frac{9.316 * 1000}{50 * 10.04} = 18.557 \text{ cm/Sec}$$

Approach velocity head in the Flume upstream of the test Model:

$$\frac{v_o^2}{2g} = \frac{(18.557)^2}{2 * 980.6} = 0.18\ cm$$

Upstream total head of water on the inlet of the culvert *(Y):*

$$Y = y_o - T + \frac{v_o^2}{2g} = 10.04 - 0.8 + 0.18 = 9.42\text{cm}$$

$$Q_c = 3 * (D * D\sqrt{2gY}) = 3 * (6 * 6\sqrt{2 * 980.6 * 9.42}$$

/1000)=14.679 l/sec.

Upstream total head of water on the weir crest *(H):*

$$H = Y - P = 9.42 - 8.7 = 0.72 \text{ cm}$$

$$Q_w = \left(\frac{2}{3}\sqrt{2g}bH^{3/2} + \frac{8}{15}\sqrt{2g}H^{5/2}\tan\theta\right) = \left(\frac{2}{3}\sqrt{2(980.6)}(50)(0.72)^{3/2} + 0\right)$$

$$= 0.89 \text{ l/sec}$$

$$Q_t = Q_w + Q_c = 0.89 + 14.68 = 15.57 \text{ l/sec}$$

$$C_d = \frac{Q_{meas.}}{Q_t} = \frac{9.316}{15.57} = 0.598$$

Appendix B: Measured Data and Calculated Results.

Table (B-1) Measured and calculated data for combined structure flow

Model 1				D=4*4 cm, b=50 cm								tan θ=0			
$h_v$cm	Q_{meas}l/sec	$y_o$cm	$v_o$cm/sec	$v^2_o/2g$ cm	Y cm	H cm	Q_wl/sec	Q_cl/sec	Qt l/sec	H/P	H/b	H/L	H/Y	H/D	Cd
8.65	3.44	7.12	9.67	0.05	6.37	0.47	0.47	5.36	5.84	0.079	0.009	0.007	0.073	0.117	0.590
10.64	5.66	8.44	13.41	0.09	7.73	1.83	3.66	5.91	9.57	0.310	0.037	0.026	0.237	0.458	0.591
11.46	6.76	8.82	15.33	0.12	8.14	2.24	4.95	6.06	11.01	0.380	0.045	0.032	0.275	0.560	0.614
12.3	8.01	9.24	17.34	0.15	8.59	2.69	6.52	6.23	12.76	0.456	0.054	0.038	0.313	0.673	0.628
12.87	8.93	9.70	18.41	0.17	9.07	3.17	8.34	6.40	14.75	0.538	0.063	0.045	0.350	0.793	0.606
13.16	9.42	9.82	19.18	0.19	9.21	3.31	8.88	6.45	15.33	0.561	0.066	0.047	0.359	0.827	0.614
Model 2				D=6*6 cm, b=50 cm								tan θ=0			
12.13	7.75	9.52	16.28	0.14	8.86	0.16	0.09	14.23	14.32	0.018	0.003	0.002	0.018	0.026	0.541
12.54	8.39	9.85	17.04	0.15	9.20	0.50	0.52	14.51	15.02	0.057	0.010	0.007	0.054	0.083	0.558
13.10	9.32	10.04	18.56	0.18	9.42	0.72	0.89	14.68	15.57	0.082	0.014	0.010	0.076	0.119	0.598
15.53	14.01	11.98	23.39	0.28	11.46	2.76	6.76	16.19	22.96	0.317	0.055	0.039	0.241	0.460	0.610
17.86	19.59	13.83	28.33	0.41	13.44	4.74	15.23	17.53	32.76	0.545	0.095	0.068	0.353	0.790	0.598
18.82	22.21	13.90	31.96	0.52	13.62	4.92	16.11	17.65	33.77	0.566	0.098	0.070	0.361	0.820	0.658

Table (B-1) Continued

Model 3				D= 8*8cm, b=50 cm								tan θ=0			
$h_v$cm	Q_{meas}l/sec	$y_o$cm	$v_o$cm/sec	$v^2_o/2g$ cm	Y cm	H cm	Q_wl/sec	Q_c l/sec	Qt l/sec	H/P	H/b	H/L	H/Y	H/D	cd
16.80	17.04	13.11	25.99	0.34	12.65	1.55	2.86	30.25	33.11	0.14	0.03	0.02	0.12	0.19	0.515
17.01	17.43	13.6	25.63	0.33	13.13	2.03	4.29	30.82	35.10	0.18	0.04	0.03	0.15	0.25	0.497
18.20	20.50	14.43	28.41	0.41	14.04	2.94	7.45	31.86	39.31	0.27	0.06	0.04	0.21	0.37	0.521
19.90	25.39	15.36	33.06	0.56	15.12	4.02	11.89	33.06	44.95	0.36	0.08	0.06	0.27	0.50	0.565
20.43	27.03	15.81	34.18	0.60	15.61	4.51	14.14	33.59	47.74	0.41	0.09	0.06	0.29	0.56	0.566
21.53	30.67	16.63	36.88	0.69	16.52	5.42	18.65	34.56	53.21	0.49	0.11	0.08	0.33	0.68	0.576
23.15	36.49	17.9	40.78	0.85	17.95	6.85	26.45	36.02	62.47	0.62	0.14	0.10	0.38	0.86	0.584
Model 4				D= 10*10 cm, b=50 cm								tan θ=0			
19.33	23.68	14.81	31.98	0.52	14.53	0.93	1.33	50.65	51.97	0.068	0.019	0.013	0.064	0.093	0.456
20.40	26.95	15.74	34.24	0.60	15.54	1.94	3.98	52.37	56.35	0.142	0.039	0.028	0.125	0.194	0.478
20.90	28.56	16.1	35.48	0.64	15.94	2.34	5.29	53.05	58.34	0.172	0.047	0.033	0.147	0.234	0.490
21.20	29.55	16.39	36.06	0.66	16.25	2.65	6.38	53.56	59.94	0.195	0.053	0.038	0.163	0.265	0.493
22.15	32.83	16.41	40.01	0.82	16.43	2.83	7.01	53.85	60.86	0.208	0.057	0.040	0.172	0.283	0.539
22.50	34.09	17.21	39.61	0.80	17.21	3.61	10.13	55.12	65.24	0.265	0.072	0.052	0.210	0.361	0.522

Table (B-1) Continued

Model 5				D=4*4 cm, b=10 cm								$\tan\theta$=9.515			
$h_v$cm	Q_{meas}l/sec	$y_o$cm	$v_o$cm/sec	$v^2_o/2g$ cm	Y cm	H cm	Q_wl/sec	Q_c l/sec	Qt l/sec	H/P	H/b	H/L	H/Y	H/D	Cd
8.21	3.04	7.475	8.14	0.03	6.71	0.81	0.35	5.51	5.853	0.137	0.081	0.012	0.121	0.202	0.520
8.73	3.53	7.935	8.89	0.04	7.18	1.28	0.84	5.69	6.532	0.216	0.128	0.018	0.178	0.319	0.540
8.97	3.76	8.11	9.26	0.04	7.35	1.45	1.09	5.76	6.855	0.246	0.145	0.021	0.198	0.363	0.548
9.15	3.95	8.23	9.59	0.05	7.48	1.58	1.29	5.81	7.099	0.267	0.158	0.023	0.211	0.394	0.556
9.27	4.07	8.32	9.78	0.05	7.57	1.67	1.45	5.85	7.293	0.283	0.167	0.024	0.220	0.417	0.558
9.54	4.36	8.575	10.16	0.05	7.83	1.93	1.95	5.95	7.897	0.327	0.193	0.028	0.246	0.482	0.551
10.97	6.08	9.30	13.08	0.09	8.59	2.69	3.96	6.23	10.190	0.455	0.269	0.038	0.313	0.672	0.597
14.83	12.53	11.85	21.15	0.23	11.28	5.38	18.76	7.14	25.896	0.912	0.538	0.077	0.477	1.345	0.484
Model 6				D=6*6 cm, b=10 cm								$\tan\theta$=9.515			
11.49	6.80	9.50	14.32	0.10	8.80	0.10	0.01	14.19	14.20	0.012	0.010	0.001	0.012	0.017	0.479
11.59	6.95	9.61	14.45	0.11	8.92	0.22	0.03	14.28	14.32	0.025	0.022	0.003	0.024	0.036	0.485
12.15	7.78	10.58	14.70	0.11	9.89	1.19	0.73	15.04	15.77	0.137	0.119	0.017	0.120	0.198	0.493
12.72	8.68	11.11	15.63	0.12	10.43	1.73	1.56	15.45	17.01	0.199	0.173	0.025	0.166	0.289	0.510
13.73	10.43	11.87	17.57	0.16	11.23	2.53	3.47	16.03	19.49	0.291	0.253	0.036	0.225	0.421	0.535
14.70	12.28	12.50	19.65	0.20	11.90	3.20	5.79	16.50	22.29	0.367	0.320	0.046	0.269	0.533	0.551
15.87	14.76	13.20	22.36	0.25	12.65	3.95	9.31	17.01	26.33	0.455	0.395	0.056	0.313	0.659	0.561

Table (B-1) Continued

Model 7				D=8*8 cm, b=10 cm								$\tan\theta$=9.515			
$h_v$cm	Q_{meas}l/sec	$y_o$cm	$v_o$cm/sec	$v^2_o/2g$ cm	Y cm	H cm	Q_wl/sec	Q_c l/sec	Qt l/sec	H/P	H/b	H/L	H/Y	H/D	cd
15.86	14.74	13.05	22.58	0.26	12.51	1.41	1.02	30.07	31.10	0.127	0.141	0.020	0.113	0.176	0.474
15.79	14.58	13.09	22.28	0.25	12.54	1.44	1.07	30.11	31.19	0.130	0.144	0.021	0.115	0.180	0.467
16.21	15.53	13.46	23.06	0.27	12.94	1.84	1.76	30.58	32.34	0.165	0.184	0.026	0.142	0.230	0.480
16.33	15.80	13.67	23.12	0.27	13.14	2.04	2.20	30.83	33.03	0.184	0.204	0.029	0.155	0.255	0.479
16.28	15.69	13.70	22.90	0.27	13.17	2.07	2.26	30.85	33.11	0.186	0.207	0.030	0.157	0.258	0.474
16.73	16.75	14.04	23.86	0.29	13.53	2.43	3.19	31.28	34.46	0.219	0.243	0.035	0.180	0.304	0.486
18.86	22.32	15.85	28.17	0.40	15.45	4.35	11.58	33.43	45.00	0.392	0.435	0.062	0.282	0.544	0.496
Model 8				D=10*10 cm, b=10 cm								$\tan\theta$=9.515			
19.07	22.93	14.47	31.69	0.51	14.18	0.58	0.19	50.03	50.22	0.043	0.058	0.008	0.041	0.058	0.456
19.2	23.30	14.70	31.70	0.51	14.41	0.81	0.35	50.44	50.79	0.060	0.081	0.012	0.056	0.081	0.459
19.48	24.11	15.11	31.91	0.52	14.83	1.23	0.78	51.16	51.94	0.090	0.123	0.018	0.083	0.123	0.464
19.69	24.75	15.47	32.00	0.52	15.19	1.59	1.31	51.78	53.10	0.117	0.159	0.023	0.105	0.159	0.466
19.95	25.54	15.70	32.54	0.54	15.44	1.84	1.77	52.20	53.97	0.135	0.184	0.026	0.119	0.184	0.473
22.24	33.15	16.68	39.75	0.81	16.69	3.09	5.36	54.27	59.63	0.227	0.309	0.044	0.185	0.309	0.556

Table (B-1) Continued

Model 9				D=4*4 cm, b=10 cm								$\tan\theta$=6.314			
$h_v$cm	Q_{meas}l/sec	$y_o$cm	$v_o$cm/sec	$v^2_o/2g$ cm	Y cm	H cm	Q_wl/sec	Q_c l/sec	Qt l/sec	H/P	H/b	H/L	H/Y	H/D	cd
8.30	3.12	7.60	8.21	0.03	6.83	0.93	0.39	5.56	5.95	0.158	0.093	0.013	0.137	0.234	0.524
8.67	3.46	8.10	8.55	0.04	7.34	1.44	0.88	5.76	6.64	0.244	0.144	0.021	0.196	0.359	0.522
9.10	3.89	8.33	9.33	0.04	7.58	1.68	1.19	5.85	7.04	0.285	0.168	0.024	0.222	0.420	0.552
9.26	4.05	8.47	9.57	0.05	7.72	1.82	1.39	5.90	7.29	0.308	0.182	0.026	0.235	0.454	0.556
9.34	4.14	8.70	9.53	0.05	7.95	2.05	1.76	5.99	7.75	0.347	0.205	0.029	0.258	0.512	0.535
9.73	4.57	8.92	10.24	0.05	8.18	2.28	2.18	6.08	8.26	0.386	0.228	0.033	0.279	0.570	0.553
14.71	12.29	12.20	20.15	0.21	11.61	5.71	15.63	7.24	22.87	0.967	0.571	0.082	0.492	1.427	0.537
Model 10				D=6*6 cm, b=10 cm								$\tan\theta$=6.314			
12.09	7.69	10.41	14.77	0.11	9.72	1.02	0.46	14.91	15.37	0.117	0.102	0.015	0.105	0.170	0.500
12.25	7.92	10.61	14.93	0.11	9.93	1.23	0.65	15.07	15.72	0.141	0.123	0.018	0.124	0.205	0.504
12.47	8.28	10.92	15.15	0.12	10.24	1.54	1.01	15.31	16.31	0.177	0.154	0.022	0.151	0.257	0.507
12.93	9.02	11.35	15.90	0.13	10.68	1.98	1.64	15.63	17.27	0.227	0.198	0.028	0.185	0.330	0.522
13.50	10.01	11.89	16.84	0.14	11.23	2.53	2.72	16.03	18.75	0.291	0.253	0.036	0.226	0.422	0.534
14.62	12.12	12.72	19.05	0.19	12.11	3.41	5.06	16.64	21.71	0.392	0.341	0.049	0.282	0.568	0.558
18.13	20.31	15.01	27.05	0.37	14.59	5.89	16.76	18.27	35.03	0.677	0.589	0.084	0.404	0.981	0.580

Table (B-1) Continued

Model 11				D=8*8 cm, b=10 cm								$\tan\theta$=6.314			
$h_v$cm	Q_{meas}l/sec	$y_o$cm	$v_o$cm/sec	$v^2_o/2g$ cm	Y cm	H cm	Q_wl/sec	Q_c l/sec	Qt l/sec	H/P	H/b	H/L	H/Y	H/D	cd
15.7	14.38	12.87	22.35	0.25	12.32	1.22	0.65	29.85	30.50	0.110	0.122	0.017	0.099	0.153	0.472
15.77	14.54	12.95	22.45	0.26	12.41	1.31	0.73	29.95	30.68	0.118	0.131	0.019	0.105	0.163	0.474
16.14	15.37	13.435	22.88	0.27	12.90	1.80	1.36	30.54	31.91	0.162	0.180	0.026	0.140	0.225	0.482
16.29	15.71	13.65	23.02	0.27	13.12	2.02	1.71	30.80	32.51	0.182	0.202	0.029	0.154	0.253	0.483
16.56	16.34	13.975	23.39	0.28	13.45	2.35	2.33	31.19	33.52	0.212	0.235	0.034	0.175	0.294	0.488
16.99	17.38	14.5	23.97	0.29	13.99	2.89	3.58	31.81	35.38	0.261	0.289	0.041	0.207	0.362	0.491
20.31	26.66	17.1	31.19	0.50	16.80	5.70	15.56	34.85	50.41	0.513	0.570	0.081	0.339	0.712	0.529
Model 12				D=10*10 cm, b=10 cm								$\tan\theta$=6.314			
19.07	22.91	14.5	31.60	0.51	14.21	0.61	0.18	50.08	50.26	0.045	0.061	0.009	0.043	0.061	0.456
19.37	23.78	14.99	31.73	0.51	14.70	1.10	0.53	50.94	51.48	0.081	0.110	0.016	0.075	0.110	0.462
19.62	24.53	15.44	31.77	0.51	15.15	1.55	1.02	51.72	52.74	0.114	0.155	0.022	0.103	0.155	0.465
20.00	25.70	15.825	32.48	0.54	15.56	1.96	1.62	52.41	54.03	0.144	0.196	0.028	0.126	0.196	0.476
20.40	26.95	16.38	32.90	0.55	16.13	2.53	2.71	53.36	56.07	0.186	0.253	0.036	0.157	0.253	0.481
20.95	28.72	16.86	34.07	0.59	16.65	3.05	4.00	54.21	58.22	0.224	0.305	0.044	0.183	0.305	0.493
21.94	32.07	17.805	36.02	0.66	17.67	4.07	7.39	55.84	63.24	0.299	0.407	0.058	0.230	0.407	0.507

Table (B-2) Measured and calculated data for the Broad Crested Weir flow

Model 1				P=5.9 cm,b=50 cm					$\tan\theta$=0		
$h_v$cm	Q_{meas}l/sec	$y_o$cm	$v_o$cm/sec	$v^2_o/2g$ cm	Y cm	H cm	Q_wl/sec	H/P	H/b	H/L	Cd
7.15	2.18	8.18	5.33	0.01	7.39	1.49	2.70	0.25	0.03	0.02	0.809
7.33	2.32	8.2	5.65	0.02	7.42	1.52	2.76	0.26	0.03	0.02	0.840
7.88	2.75	8.5	6.48	0.02	7.72	1.82	3.63	0.31	0.04	0.03	0.759
8.62	3.41	8.9	7.67	0.03	8.13	2.23	4.92	0.38	0.04	0.03	0.695
11.28	6.51	10.14	12.84	0.08	9.42	3.52	9.77	0.60	0.07	0.05	0.666
11.96	7.49	10.56	14.18	0.10	9.86	3.96	11.64	0.67	0.08	0.06	0.643
14.13	11.17	11.71	19.08	0.19	11.10	5.20	17.48	0.88	0.10	0.07	0.639
Model 2				P=8.7 cm, b=50 cm					$\tan\theta$=0		
10.10	4.99	12.3	8.12	0.03	11.53	2.83	7.04	0.33	0.06	0.04	0.709
12.50	8.33	13.61	12.23	0.08	12.89	4.19	12.64	0.48	0.08	0.06	0.658
13.57	10.14	14.26	14.22	0.10	13.56	4.86	15.83	0.56	0.10	0.07	0.640
14.38	11.65	14.85	15.69	0.13	14.18	5.48	18.91	0.63	0.11	0.08	0.616
16.03	15.12	15.8	19.14	0.19	15.19	6.49	24.39	0.75	0.13	0.09	0.620
16.78	16.87	16.35	20.63	0.22	15.77	7.07	27.73	0.81	0.14	0.10	0.608

Table (B-2) Continued

Model 3				P=11.1 cm, b=50 cm					$\tan\theta$=0		
$h_v$cm	Q_{meas}l/sec	$y_o$cm	$v_o$cm/sec	$v^2_o/2g$ cm	Y cm	H cm	Q_wl/sec	H/P	H/b	H/L	Cd
6.90	2.00	13.69	2.93	0.00	12.89	1.79	3.55	0.16	0.04	0.03	0.564
11.47	6.77	16	8.47	0.04	15.24	4.14	12.42	0.37	0.08	0.06	0.545
12.77	8.76	16.82	10.42	0.06	16.08	4.98	16.38	0.45	0.10	0.07	0.535
14.27	11.44	17.78	12.87	0.08	17.06	5.96	21.50	0.54	0.12	0.09	0.532
15.62	14.21	18.63	15.25	0.12	17.95	6.85	26.46	0.62	0.14	0.10	0.537
16.01	15.07	18.84	16.00	0.13	18.17	7.07	27.75	0.64	0.14	0.10	0.543
Model 4				P=13.6 cm, b=50 cm					$\tan\theta$=0		
7.25	2.25	16.23	2.78	0.00	15.43	1.83	3.67	0.13	0.04	0.03	0.615
8.86	3.65	16.92	4.31	0.01	16.13	2.53	5.94	0.19	0.05	0.04	0.614
11.17	6.36	18.18	6.99	0.02	17.40	3.80	10.96	0.28	0.08	0.05	0.580
12.70	8.65	19.11	9.05	0.04	18.35	4.75	15.29	0.35	0.10	0.07	0.566
13.87	10.68	19.69	10.85	0.06	18.95	5.35	18.27	0.39	0.11	0.08	0.585
15.62	14.21	20.82	13.65	0.09	20.11	6.51	24.55	0.48	0.13	0.09	0.579

Table (B-2) Continued

Model 5				P=5.9cm, b=10 cm					$\tan\theta$=9.515		
$h_v$cm	Q_{meas}l/sec	$y_o$cm	$v_o$cm/sec	$v^2_o/2g$ cm	Y cm	H cm	Q_wl/sec	H/P	H/b	H/L	Cd
2.10	0.12	7.22	0.32	0.00	6.42	0.52	0.15	0.09	0.05	0.01	0.748
1.89	0.09	7.24	0.25	0.00	6.44	0.54	0.17	0.09	0.05	0.01	0.543
4.00	0.54	8.1	1.34	0.00	7.30	1.40	1.01	0.24	0.14	0.02	0.536
5.43	1.13	8.48	2.66	0.00	7.68	1.78	1.66	0.30	0.18	0.03	0.680
7.08	2.13	9.1	4.68	0.01	8.31	2.41	3.13	0.41	0.24	0.03	0.680
8.46	3.27	9.7	6.74	0.02	8.92	3.02	5.12	0.51	0.30	0.04	0.638
12.84	8.87	12.04	14.74	0.11	11.35	5.45	19.35	0.92	0.55	0.08	0.459
Model 6				P=8.7 cm, b=50 cm					$\tan\theta$=9.515		
2.09	0.11	10.005	0.23	0.00	9.21	0.51	0.15	0.06	0.05	0.01	0.779
2.81	0.23	10.13	0.46	0.00	9.33	0.63	0.22	0.07	0.06	0.01	1.063
3.22	0.32	10.195	0.63	0.00	9.40	0.70	0.26	0.08	0.07	0.01	1.230
4.37	0.67	10.71	1.25	0.00	9.91	1.21	0.76	0.14	0.12	0.02	0.886
5.72	1.28	11.465	2.23	0.00	10.67	1.97	2.04	0.23	0.20	0.03	0.629
7.33	2.32	11.93	3.88	0.01	11.14	2.44	3.21	0.28	0.24	0.03	0.721
9.03	3.82	12.65	6.04	0.02	11.87	3.17	5.68	0.36	0.32	0.05	0.672
11.11	6.27	13.925	9.00	0.04	13.17	4.47	12.26	0.51	0.45	0.06	0.511
13.36	9.77	15.27	12.79	0.08	14.55	5.85	22.81	0.67	0.59	0.08	0.428

Table (B-2) Continued

Model 7				P=11.1 cm, b=10 cm					$\tan\theta$=9.515		
$h_v$cm	Q_{meas}l/sec	$y_o$cm	$v_o$cm/sec	$v^2_o/2g$ cm	Y cm	H cm	Q_wl/sec	H/P	H/b	H/L	Cd
2.57	0.19	12.81	0.29	0.00	12.01	0.91	0.43	0.08	0.09	0.01	0.432
3.93	0.52	13.25	0.78	0.00	12.45	1.35	0.94	0.12	0.14	0.02	0.553
4.50	0.72	13.77	1.04	0.00	12.97	1.87	1.83	0.17	0.19	0.03	0.392
5.62	1.22	14.08	1.74	0.00	13.28	2.18	2.53	0.20	0.22	0.03	0.484
8.15	2.99	15.24	3.92	0.01	14.45	3.35	6.42	0.30	0.33	0.05	0.466
12.57	8.44	17.46	9.67	0.05	16.71	5.61	20.66	0.51	0.56	0.08	0.409
Model 8				P=13.6 cm, b=10 cm					$\tan\theta$=9.515		
1.84	0.08	14.93	0.11	0.00	14.13	0.53	0.16	0.04	0.05	0.01	0.526
1.47	0.05	14.955	0.07	0.00	14.16	0.56	0.17	0.04	0.06	0.01	0.285
3.92	0.52	15.29	0.68	0.00	14.49	0.89	0.42	0.07	0.09	0.01	1.244
6.76	1.91	16.72	2.28	0.00	15.92	2.32	2.89	0.17	0.23	0.03	0.659
8.38	3.19	17.6	3.63	0.01	16.81	3.21	5.83	0.24	0.32	0.05	0.547
12.87	8.93	20.16	8.86	0.04	19.40	5.80	22.33	0.43	0.58	0.08	0.400

Table (B-2) Continued

Model 9				P=5.9 cm, b=10 cm					$\tan\theta$=6.314		
$h_v$cm	Q_{meas}l/sec	$y_o$cm	$v_o$cm/sec	$v^2_o/2g$ cm	Y cm	H cm	Q_wl/sec	H/P	H/b	H/L	Cd
2.16	0.12	7.375	0.34	0.00	6.58	0.68	0.22	0.11	0.07	0.01	0.563
2.84	0.24	7.47	0.64	0.00	6.67	0.77	0.28	0.13	0.08	0.01	0.860
5.54	1.18	8.365	2.82	0.00	7.57	1.67	1.17	0.28	0.17	0.02	1.006
6.06	1.47	9.04	3.25	0.01	8.25	2.35	2.32	0.40	0.23	0.03	0.633
8.30	3.12	10.025	6.22	0.02	9.24	3.34	4.86	0.57	0.33	0.05	0.642
9.70	4.53	10.735	8.44	0.04	9.97	4.07	7.41	0.69	0.41	0.06	0.611
Model 10				P=8.7 cm, b=10 cm					$\tan\theta$=6.314		
2.25	0.14	9.83	0.28	0.00	9.03	0.33	0.07	0.04	0.03	0.00	2.087
3.41	0.37	10.295	0.72	0.00	9.50	0.80	0.29	0.09	0.08	0.01	1.259
5.45	1.14	11.315	2.01	0.00	10.52	1.82	1.39	0.21	0.18	0.03	0.820
6.70	1.87	12.055	3.10	0.00	11.26	2.56	2.77	0.29	0.26	0.04	0.673
7.59	2.52	12.545	4.01	0.01	11.75	3.05	4.00	0.35	0.31	0.04	0.629
8.57	3.37	13	5.18	0.01	12.21	3.51	5.40	0.40	0.35	0.05	0.624
12.83	8.85	15.245	11.62	0.07	14.51	5.81	16.29	0.67	0.58	0.08	0.543

Table (B-2) Continued

Model 11				P=11.1 cm, b=10 cm					$\tan\theta$=6.314		
$h_v$cm	Q_{meas}l/sec	$y_o$cm	$v_o$cm/sec	$v^2_o/2g$ cm	Y cm	H cm	Q_wl/sec	H/P	H/b	H/L	Cd
2.15	0.12	12.765	0.19	0.00	11.97	0.87	0.34	0.08	0.09	0.01	0.358
2.98	0.27	13	0.41	0.00	12.20	1.10	0.53	0.10	0.11	0.02	0.505
4.34	0.66	13.8	0.95	0.00	13.00	1.90	1.52	0.17	0.19	0.03	0.435
5.57	1.20	14.255	1.68	0.00	13.46	2.36	2.34	0.21	0.24	0.03	0.512
6.60	1.80	14.815	2.43	0.00	14.02	2.92	3.64	0.26	0.29	0.04	0.494
7.465	2.42	15.215	3.18	0.01	14.42	3.32	4.78	0.30	0.33	0.05	0.506
12.85	8.90	18.03	9.87	0.05	17.28	6.18	18.69	0.56	0.62	0.09	0.476
Model 12				P=13.6 cm, b=10 cm					$\tan\theta$=6.314		
1.90	0.09	15.13	0.12	0.00	14.33	0.73	0.25	0.05	0.07	0.01	0.361
3.105	0.30	15.26	0.39	0.00	14.46	0.86	0.34	0.06	0.09	0.01	0.874
5.10	0.97	16	1.21	0.00	15.20	1.60	1.08	0.12	0.16	0.02	0.897
6.35	1.64	17.105	1.92	0.00	16.31	2.71	3.11	0.20	0.27	0.04	0.528
9.23	4.03	18.36	4.39	0.01	17.57	3.97	7.02	0.29	0.40	0.06	0.574
12.84	8.87	20.525	8.64	0.04	19.76	6.16	18.58	0.45	0.62	0.09	0.477

Table (B-3) Measured and calculated data for the Culvert flow

Model 1					D=4 cm				
$h_v$cm	Q_{meas}l/sec	$y_o$cm	$v_o$cm/sec	$v^2_o/2g$ cm	Y cm	Q_c l/sec	Y/L	Y/D	cd
9.55	4.37	10.8	8.09	0.03	10.43	6.87	0.15	2.608	0.636
9.80	4.65	11.97	7.76	0.03	11.60	7.24	0.17	2.900	0.642
9.84	4.69	12.59	7.45	0.03	12.22	7.43	0.17	3.055	0.631
11.89	7.38	24.64	5.99	0.02	24.26	10.47	0.35	6.065	0.705
11.90	7.40	26.28	5.63	0.02	25.90	10.82	0.37	6.474	0.684
12.63	8.53	28.68	5.95	0.02	28.30	11.31	0.40	7.075	0.755
Model 2					D=6 cm				
11.10	6.26	8.8	14.23	0.10	8.50	13.95	0.1215	1.417	0.449
11.90	7.40	9.63	15.37	0.12	9.35	14.63	0.1336	1.558	0.506
13.79	10.54	12.99	16.22	0.13	12.72	17.06	0.1818	2.121	0.618
15.39	13.71	17.42	15.74	0.13	17.15	19.80	0.2449	2.858	0.692
15.80	14.60	19.23	15.19	0.12	18.95	20.82	0.2707	3.158	0.701
17.83	19.51	29.25	13.34	0.09	28.94	25.73	0.4134	4.823	0.758

Table (B-3) Continued

Model 3					D=8 cm				
$h_v$cm	Q_{meas}l/sec	$y_o$cm	$v_o$cm/sec	$v^2_o/2g$ cm	Y cm	Q_c l/sec	Y/L	Y/D	cd
15.41	13.75	12.23	22.49	0.26	12.09	29.56	0.17268	1.511	0.465
15.81	14.62	13.1	22.33	0.25	12.95	30.60	0.18506	1.619	0.478
16.79	16.89	15.4	21.94	0.25	15.25	33.20	0.21779	1.906	0.509
17.20	17.90	16.1	22.23	0.25	15.95	33.96	0.22789	1.994	0.527
17.95	19.83	18.76	21.14	0.23	18.59	36.66	0.26554	2.323	0.541
18.77	22.07	21.19	20.83	0.22	21.01	38.98	0.30016	2.626	0.566
20.50	27.27	28.26	19.30	0.19	28.05	45.03	0.40071	3.506	0.605
Model 4					D=10 cm				
15.12	13.14	10.04	26.18	0.35	9.99	41.99	0.14271	0.999	0.313
16.58	16.39	11.47	28.58	0.42	11.49	45.03	0.16409	1.149	0.364
17.18	17.85	12.13	29.43	0.44	12.17	46.35	0.17388	1.217	0.385
17.32	18.20	12.29	29.62	0.45	12.34	46.67	0.17625	1.234	0.390
17.81	19.46	12.82	30.36	0.47	12.89	47.70	0.18414	1.289	0.408
17.89	19.67	12.83	30.66	0.48	12.91	47.73	0.18442	1.291	0.412
18.49	21.29	13.63	31.24	0.50	13.73	49.22	0.19611	1.373	0.432
19.17	23.21	14.82	31.33	0.50	14.92	51.32	0.21315	1.492	0.452
20.16	26.19	16.8	31.18	0.50	16.90	54.61	0.24137	1.690	0.480
21.53	30.67	19.11	32.10	0.53	19.24	58.27	0.27479	1.924	0.526
22.30	33.36	21.3	31.33	0.50	21.40	61.46	0.30572	2.140	0.543