UNIT COMMITMENT WITH DGS IN DISRITIBUTION SYSTEMS

A THESIS SUBMITTED TO
THE GRADUATE SCHOOL OF NATURAL AND APPLIED SCIENCES
OF
MIDDLE EAST TECHNICAL UNIVERSITY

BY

MOHSEN BAYAT

IN PARTIAL FULFILLMENT OF THE REQUIREMENTS
FOR
THE DEGREE OF MASTER OF SIENCE
IN
ELECTRICAL AND ELECTRONICS ENGINEERING

SEPTEMBER 2013

Approval of the thesis:

UNIT COMMITMENT WITH DGS IN DISTRIBUTION SYSTEMS

submitted by **MOHSEN BAYAT** in partial fulfillment of the requirements for the degree **of Master of Science in Electrical and Electronics Engineering Department, Middle East Technical University** by,

Prof. Dr. Canan Özgen
Dean, Graduate School of **Natural and Applied Sciences** _____

Prof. Dr. Gönül Turhan Sayan
Head of Department, **Electrical and Electronics Engineering** _____

Prof. Dr. İsmet Erkmen
Supervisor, **Electrical and Electronics Engineering Dept., METU** _____

Dr. Cem Şahin
Co-Supervisor, **Tubitak Uzay** _____

Examining Committee Members:

Prof. Dr. Osman Sevaioğlu
Electrical and Electronics Engineering Dept., METU _____

Prof. Dr. İsmet Erkmen
Electrical and Electronics Engineering Dept., METU _____

Dr. Cem Şahin
Tubitak Uzay _____

Prof. Dr. Mirzahan Hizal
Electrical and Electronics Engineering Dept., METU _____

Prof. Dr. Ahmet Rumeli
Electrical and Electronics Engineering Dept., METU _____

Date: **04.09.2013**

I hereby declare that all information in this document has been obtained and presented in accordance with academic rules and ethical conduct. I also declare that, as required by these rules and conduct, I have fully cited and referenced all material and results that are not original to this work.

Name, Last name :

Signature :

ABSTRACT

UNIT COMMITMENT WITH DGs IN DISTRIBUTION SYSTEMS

Bayat, Mohsen
MS, Department of Electrical and Electronics Engineering
Supervisor: Prof. Dr. İsmet Erkmen
Co- Supervisor: Dr. Cem Şahin

September 2013, 81 pages

In this thesis the impact of distributed generation (DG) on the total cost of generating electricity is investigated. A distribution system including PV (PV) generators is considered. A mixed integer linear programming based Unit Commitment algorithm is used to optimally schedule the PV generation and other conventional generation resources for 24 hours. Afterwards, a distribution system power flow algorithm is utilized to check whether the UC solution is within the thermal limitations of the distribution lines. Finally the proposed methodology is applied to a distribution system in two scenarios and the results are analyzed.

Key words: DG, Unit commitment (UC), forward-backward sweep, Mixed integer linear programming (MILP).

ÖZ

DAĞITIM SİSTEMLERİNDE DAĞITIK ÜRETİM ÜNİTE ATAMALARİ

Bayat, Mohsen
Master, Elektrik Elektronik Mühendisliği Bölümü
Tez Yöneticisi: Prof. Dr. İsmet Erkmen
Oratak Tez Yöneticisi: Dr. Cem Şahin

Eylül 2010, 81 sayfa

Bu tezde dağıtık üretimin toplam elektrik üretim maliyetine etkisi incelenmiştir. Fotovoltaik (PV) generatörler içeren bir dağıtım sistemi göz önüne alınmıştır. PV üretimi ve digger geleneksel üretim kaynaklarını 24 saat boyunca programlamak için karışık tamsayı lineer programlama algoritması temelli unite atama (UC) algoritması kullanılmıştır. Daha sonra, UC sonuçlarının dağıtım hatlarının termal sınırlarında olup olmadığını kontrol etmek için bir dağıtım sistemi yük akışı algoritması kullanılmıştır. Son olarak önerilen metodoloji iki senaryolu olarak dağıtım sistemine uygulanmış ve sonuçlar analiz edilmiştir.

Anahtar kelimeler: Dağıtık üretim (DG), Ünite Atama (UC), ileri-geri süpürme, karışık tamsayı doğrusal programlama (MILP).

To My lovely Parents and My Sister

ACKNOWLEDGEMENTS

I would like to express my deepest gratitude to my supervisor Prof. Dr. İsmet Erkmen for his guidance, and trust during my master studies. I am also grateful to my co-supervisor, Dr. Cem Şahin for his guidance, encouragement, and technical support.

I also wanted specially thank to my parents and my sister, who passionately backed me up, and support me both mentally and financially through out my thesis study.

Finally, I also want to extend my thanks to ESSEX Company because of giving me the opportunity of using DESS program in my thesis.

TABLE OF CONTENTS

ABSTRACT V

ÖZ VI

ACKNOWLEDGEMENTS VIII

TABLE OF CONTENTS IX

LIST OF TABLES X

LIST OF FIGURES XII

ABBREVIATIONS XIII

CHAPTERS 1

INTRODUCTION 1

1.1. OBJECTIVE 1
1.2. CONTRIBUTION 1
1.3. MOTIVATION 2
1.4. OVERVIEW 3
1.5. ORGANIZATION 4

LITERATURE REVIEW 5

PROPOSED SOLUTION METHODOLOGY 8

3.1. UNIT COMMITMENT 10
3.1.1. Mixed-Integer Linear Programing Unit Commitment 11
3.2. NETWORK CHECK 11
3.2.1. Forward/Backward sweep 11
3.3. PV GENERATION UNIT 12

CASE STUDY AND RESULTS 13

4.1. IEEE 34 BUS TEST FEEDER 13
4.2. ENVIRONMENTAL CONDITIONS 15
4.3. SIMULATION STUDIES 18
4.3.1. First Scenario 21
4.3.2. Second Scenario 21
4.4. SIMULATION RESULTS 22

CONCLUSION 31

5.1. CONCLUSION 31
5.2. FUTURE WORKS 32
REFERENCES 33
APPENDICES 37
A. UNIT COMMITMENT 37
A.1. UNIT COMMITMENT FORMULATION 38
A.1.1. Modeling Operating Cost 38
A.1.2. Constraints Modeling 40
A.2. MILP-BASED UC 41
A.2.1. Methodology Formulation 41
B. DISTRIBUTION POWER FLOW ALGORITHM 49
B.1. MATHEMATICAL NOTATIONS 50
B.2. LATERAL AND BUS INDEXING METHOD 51
B.3. SOLUTION ALGORITHM IN DETAIL 53
B.3.1. Backward sweep 54
B.3.2. Forward sweep 60
B.3.3. Convergence criterion 62
B.4. IMPLEMENTATION OF METHOD 62
B.4.1. Grounded primary-Ungrounded secondary 63
B.4.2. Ungrounded primary-Grounded secondary 64
C. PV GENERATORS MODELING 67
C.1. PHOTOVOLTAIC ARRAY MODELING 68
C.1.1. Solar cell 68
C.1.2. PV Module 69
C.1.3. PV Array 72
C.2. POWER CONDITIONING UNIT (PCU) 72
2.2.1. Maximum Power Point Tracker (MPPT) 72
C.2.2. DC/AC Inverter 74
C.3. CALCULATION OF AC OUTPUT POWER 75
C.3.1. Connection Scheme of Modules of Array 78
C.3.2. Convert and Scale Cell Characteristic Equation to Array Characteristic Equation 79
C.3.4. Calculate I-V Curve of the Characteristic Equation and Determining PGDC 79
C. 4. POWER CONDITIONING UNIT (PCU) 80
C. 4.1. PQ Source Model 81
C. 4.2. PV Source Model 81

LIST OF TABLES

TABLES

Table 4.1 Daily Load……..16
Table 4.2 DG and substation information……..20
Table 4.3 System Reserves…….……20
Table 4.4 Bidding……...20
Table 4.5 Start up Cost……20
Table 4.6 Generated Power of 200kW PV Unit……..22
Table 4.7 Generated Power of 400kW PV Unit…….23
Table 4.8 Generated Power of 600kW PV Unit…….24
Table 4.9 Generated Power of 600kW PV Unit…….25
Table 4.10 Generated Power of 1000kW PV Unit…….26
Table 4.11 Total Production Cost ($)…….27
Table B.1 Mathematical Notations…….49
Table B.2 Forward-Backward sweep…….52
Table B.3 Forward-Backward Sweep in Detail……..53
Table B.4 Implementation of (B.1)…….54
Table B.5 Shunt Capacitor Admittance and Current Matrix……..55
Table B.6 Injected Current by Load……56
Table B.7 Injected Current and Admittance Matrix of DG……56
Table B.8 Distribution Lines Update Formulas……..57
Table B.9 Switches Update Formulas…….……57
Table B.10 Transformers Admittance Matrices…….…….58
Table B.11 Update Formulas for Grounded wye-Grounded wye……...59
Table B.12 Update Formulas for Grounded wye-Ungrounded wye……...59
Table B.13 Update Formulas for Ungrounded wye-Grounded wye……...59
Table B.14 Implementation of B.6…….……61

LIST OF FIGURES

FIGURES

Figure 3.1 Proposed Solution Methodology……..…..…10
Figure 4.1 Distribution Test System……..…….....…14
Figure 4.2 Lateral Indexing Order……...…14
Figure 4.3 Hourly Ambient Temperature…….……..16
Figure 4.4 Hourly Irradiance……..…….16
Figure 4.5 Block Diagram of Computing Output AC Power…….……17
Figure 4.6 Placement of DGs in the System…….…..21
Figure 4.7 Placement of DGs in the System…….……..21
Figure 4.8 PV Power Generation……27
Figure 4.9 Production Cost ($)……28
Figure 4.10 Effect of Uncertainties on the Total Production Cost……..28
Figure A.1 Startup cost Curve for Unit i……45
Figure B.1 Bus and Lateral indexing……..52
Figure B.2 Single Feeder Distribution System……...54
Figure C.1 Typical Scheme of a PV Generator……..68
Figure C.2 Placement of Bypass Diodes……69
Figure C.3 Bypass Diode Function in a String……...69
Figure C.4 Placement of Blocking Diode……...71
Figure C.5 Placement of Bypass diodes, Isolating Diodes, and Blocking Diode in a PV Module……...…...71
Figure C.6 Typical Scheme of Power Conditioning Unit……...72
Figure C.7 I-V Characteristics of a PV Module under Varied Solar Irradiance…….72
Figure C.8 I-V Characteristic of a PV Module under Varied Ambient Temperature……73
Figure C.9 Example of Control Circuit of the Voltage Type Current Control Scheme Inverter……74
Figure C.10 I-V Curve Showing Three Given Points on Typical Data Sheet……76
Figure C.11 Non-Ideal Circuit Model of a PV Cell……77
Figure C.12 Circuit Diagram of a PV Array…….……..……77

ABBREVIATIONS

i: Unit index

t: Hour index

NT: Number of hours

m: Segment index

u_{it} : Unit status indicator

y_{it} : Startup indicator

z_{it} : Shutdown indicator

p_{it} : Generation for unit i at hour t

sr_{it} : Spinning reserve for unit i at hour t

or_{it} : Operating reserve for unit i at hour t

D_t : System load demand at hour t

SR_t : System spinning reserve requirement at hour t

OR_t : System operating reserve requirement at hour t

ST_i : Constant startup cost for unit i

SD_i : Shutdown cost for unit i

C_{i0} : No-load cost for unit i

$IC_{i,m}$: Incremental cost for unit i at segment

$MW_{i,m}$: Maximum MW for unit i at segment m

$PMIN_i$: Minimum capacity for unit i

$PMAX_i$: Maximum capacity for unit i

MSR_i : Maximum sustained rate (MW/min)

QSC_i : Quick start capacity

MU_i : Minimum up time for unit i

MD_i : Minimum down time for unit i

TD_{i0} : Number of hours unit i has been offline initially

TU_{i0} : Number of hours unit i has been online initially

U_{i0} : Initial commitment status of unit

P_{i0} : Initial MW

RU_i : Ramp up rate for unit i

RD_i : Ramp down rate for unit i

$ST_{i,m}$: Variable startup cost for unit i being started up at segment m

$TD_{i,m}$: Shutdown time

I_A : Array current (A)

V_A : Array voltage (V)

RUP() : Round up to the next integer

N_s : Number of cells connected in series

N_p : Number of strings connected in parallel

I_{scA} : Short circuit of the array (A)

V_{ocA} : Open circuit voltage of the array (V)

V_{mM} : Maximum power point voltage of a module

N_{sM} : Number of series modules in a string

P_{col} : Power rating of a single string of N_{sM} modules

N_{pM} : Number of parallel strings in an array

UC: Unit Commitment

PV: Photovoltaic

PCU: Power Conditioning Unit

MPPT: Maximum Power Point Tracker

CHAPTER 1

INTRODUCTION

1.1. Objective

The objective of this thesis is to evaluate the impact of DG on the total electrical energy production cost in a distribution system. Consider a distribution company with the objective of minimizing daily total energy cost, taking into account the expected PV generation and system load at each hour. A Unit Commitment (UC) algorithm is required to determine the optimal unit schedules to satisfy the total demand within the limits of the distribution system. This is due to the fact that each generating unit has its technical characteristics of minimum on/off time, ramping limits, maximum and minimum generation limits. All of these should be considered to calculate the least cost schedule for a multi-hour time period. A distribution company having PV generation assets could use the proposed algorithm to optimally schedule its units.

In order to study the impact of DG, PV and diesel generators are considered. In this thesis the day ahead operating cost of the distribution system is taken into consideration and the investment cost of the generation facilities is not considered. Power produced by PV generators will be computed by a code developed in MATLAB. The unit commitment will be implemented, using unit commitment coded in MATLAB.

1.2. Contribution

In this thesis, impact of the PV generation unit on the total electricity production is discussed. PV unit is integrated with a distribution network. The economic impact of PV generation unit with different capacities on the cost of producing electricity is checked out. Moreover, the effect of uncertainties of environmental conditions, on the cost of producing electricity is discussed.

Up to my knowledge, it is the first study to consider PV scheduling and the impact of it on the total cost of producing electricity for a distribution system rather

than transmission system. This is very important because in the future there will be self scheduling smart grids and the proposed algorithm might be used for them.

1.3. Motivation

At the beginning of work of electric company, required electrical energy was supplied by municipal facilities by installing generators according to consumers. In that time, the generators were connected to the distribution system. So the demand of electrical energy and a certain amount of reserve was supplied by DGs (DGs) which is called also on-site generation [1]. As time goes on, demand of electricity increased and because of it, it was needed to build huge generation units typically close to the energy sources like fossil fuels (coal mine, gas, petroleum, etc.) rivers, etc. Moreover, the big difference in efficiency between the big generation units and the DG units, and the fact that the cost of construction transmission system is smaller than the profits gained by economies of scale in generation [2], backed up the installation of huge power plants.

Between 1930 and 1980, the minimum cost of producing electricity is obtained by increasing the size of the generation units, but starting from 1990, by the improvement in technology of generation units, it became possible to produce power with eminently suitable costs using smaller size units. By the improvement of technology of generation and the capability of connecting to distribution networks, the basic factor of huge power plants was lost [3]. Moreover, growth and liberalization of electricity market, constraints on construction of new transmission lines, and concerns about climate changes have resulted in investments in DGs. By the improvement of technology it is possible to use renewable energy sources such as solar energy, wind energy, and fuel cell energy as a DG unit.

In recent years the idea of smart grid is introduced in power systems. One of the goals of smart grid is to increase the reliability of the power system and decreasing the load shedding in times of outage of some generation units, or the main substation of a distribution system. In this case it is needed to have DG in the system to prevent the load loss.

As time goes on, the price of fossil fuels is increasing. Hence the cost of producing electrical energy will also increase. Moreover, the fossil fuels are not infinite, so it is needed to replace them for producing the energy. One of the best alternative energy sources, are renewable energy sources like solar and wind energies.

Turkey has a superior position on the earth in terms of solar energy capability, in comparison to other European countries. According to a research of EIE, Turkey has an annual average daylight of 2640 hours, and has annual average of 1311 kWh/m^2 [23].

In conclusion, by taking the improvement in generation technology, concerns about climate changes, increasing price of fossil fuels, introduction of smart grid concept, and the great potential of solar energy in Turkey into consideration, the author checks the impact of DG on the cost of producing electrical energy. This study assumes that the distribution company operates the distribution system and responsible for the commitment of the DG resources within the system.

1.4. Overview

As it will be discussed substantially in the second chapter, research have been performed on the integration of PV systems to the transmission and distribution systems, and the impact of DG on the voltage profile, system loss, load loss cost, and the cost of producing electrical energy are considered. In this thesis, the impact of DG units on the cost of producing electrical energy is discussed and the impact of PV generation unit's uncertainty on the cost of producing energy is studied.

This thesis presents a distribution system with two types of DG units; grid-tied PV generators and diesel generators. The study involves the mathematical model of PV generator's components, diesel generators, unbalanced distribution network, power flow solver software, and a unit commitment program which is coded in MATLAB.

Process of modeling PV generators is bifurcated into two stages, modeling the PV array, and modeling the power conditioning unit. The purpose of modeling PV array is to calculate the output DC power of PV array under the given environmental conditions. The model of power conditioning unit, will compute the output AC power which is fed to utility grid, using the calculated DC power. The process of modeling these two parts is now discussed respectively.

The basic building block of a PV array is the solar cell, so the formula describing I-V characteristic of a solar cell is used as a basic formula to model the PV array. By making some assumptions, some modifications are performed on the formula to define a formula which describes the I-V characteristic of the PV array. The model uses ambient temperature, and solar irradiance of the PV array as input data to calculate the output DC power. Because there are many solutions for the formula which describes the I-V characteristic of PV array, an appropriate initial condition and an iterative method are used to solve the characteristic equation of PV array. The output DC power of PV array is the maximum power computed by the model.

There are two control schemes to control the power conditioning unit; PQ control scheme and PV control scheme. In both control schemes, first the calculated DC power is scaled down according to the efficiency of the power conditioning unit, and then the injected AC power to the utility grid is calculated.

Traditional fast decoupled power flow method is not suitable for distribution systems due to the high R/X ratio of the distribution systems. In this thesis, a method based on forward-backward sweep is used to perform the power flow study. This method is bifurcated into two stages, backward sweep and forward sweep. First the backward sweep is performed by the method which updates the current and voltage of each bus. Then it performs forward sweep which updates the voltage and current of each bus. The calculated output power of PV array is taken into consideration using the traditional PQ, PV generator models, in the power flow method. An appropriate bus indexing method is used by the power flow method in order to identify each bus. The power flow is performed to assure that the system constraints are not violated.

Unit commitment study is performed in order to commit sufficient units to satisfy the demand. In this thesis, unit commitment solver which is developed in MATLAB is used. Unit commitment determines the amount of generation for each generator in the system to meet the demand by taking the system constraints and unit constraints into account. The unit commitment study is performed for a period of 24 hours.

The IEEE 34 distribution test feeder is used as the model of distribution system in this thesis. This model is a three-phase, four wire system which includes voltage regulators, shunt capacitors, balanced and unbalanced loads. Some DGs in terms of PV generation are added to the model to check the impact of them on the system generation cost.

1.5. Organization

Chapter 2 presents the works done by others in the field of PV systems and integration of PV systems with transmission and distribution networks, and the impact of PV systems on the economical and operational aspects of the power systems.

Proposed solution methodology is discussed in third chapter. Moreover, a brief review of PV panels, power flow method for distribution systems, and unit commitment is presented in third chapter.

Case study is presented in the fourth chapter. In this chapter, impact of introducing PV systems on the cost of producing electricity is discussed. The impact of uncertainty of PV systems is also discussed in this chapter. The conclusion and future works are presented in the fifth chapter.

CHAPTER 2

LITERATURE REVIEW

Modeling of PV generators is studied in a number of references. Supplying loads by using DGs is not a new concept, but because of economic problems PV was not deployed in large amounts. Due to recent improvements in technology, DGs are taken into consideration. Applicability and types of DGs are presented in [1, 2].

The comprehensive method of modeling PV generators is presented in [4]. Basic concepts about PV generation, integration of PV generation and utility grid, modeling of standalone PV generation, integration of PV generation and batteries, and residential PV generation are presented in this work.

By introducing small-scale power generation units which have intermittent characteristic such as PV and wind generation units, it is necessary to make changes on operation and planning of distribution systems. The technical impact of DGs with intermittent characteristics on the distribution system is presented in [5]. The authors have concluded that the economical planning and operating impact of the DGs in distribution systems are insignificant. According to the penetration level of DGs with intermittent characteristics, the impact of DGs will be varied on the planning of distribution system. For a distribution system with low penetration level it is sufficient to consider a de-rating factor to the rated capacity, but for a high penetration level it is needed to calculate hourly output power of DGs and forecast hourly load for one to several years.

Impact of small-scale DG units on system loss saving and enhancement in distribution system reliability is presented in [6]. In this study, the authors have concluded that the benefit of the DGs on a voltage-limited distribution system is higher than thermally-limited distribution systems. Moreover, they have mentioned that “distribution system needs can be met with DG placed in the substation or on a primary feeder near the substation”

DG units are able to supply some percent of total load in a distribution system, which means by increasing the total load it is possible to supply the load using the same utility components. Introducing the DG units, also results in

line loss savings, deferring upgrade of utility grid's components, and decrease the maintenance interval of system components. Calculation of line loss savings, using PV generation units is presented in [7]. Moreover, a method for optimum placement of PV generation units is presented in this work. In this research it is shown that it is possible to supply the 30% of growth in the load by using DGs with out upgrading the distribution system utilities.

Output power of PV arrays is a function of solar irradiance, ambient temperature, for the same size of PV arrays. Hence it is needed to control operating points in order to achieve maximum power of PV generation units. Methods for maximum power point tracking and controlling the DC/DC converters are presented in [8]. Moreover, a comparison of efficiency of different control methods is presented. In this study, the authors suggested a new method to control the MPPT. In this method the distribution line's voltage is taken as V_{ref}, and MPPT sets the PV array's voltage according to the V_{ref}. It is shown that the efficiency of buck converter is a little bit higher than those for boost and buck-boost converters for the proposed method.

A study of grid-connected PV system's inverters and protection equipments related to grid-connected PV systems is presented in [9]. Techniques for enhancing the voltage stability and finding the optimal place and switching control scheme for capacitors are presented in [10, 11].

Another group of studies considering distribution power flow is summarized in the following sections. A forward-backward sweep method, based on updating the voltage and power is presented in [12]. In this method the backward sweep updates the apparent power flow of each lateral and voltage for each bus, and the forward sweep updates the voltage of each bus and apparent power flow of each lateral, in each iteration.

A forward-backward sweep power flow method is presented in [13]. This method is based on calculating and updating the current injected to each lateral in backward sweep, and calculating and updating the voltage of each bus in forward sweep.

Another variation of forward-backward sweep is presented in [14]. Function of backward sweep in this power flow method is to calculate the current injected into each lateral and updating both current and voltage in the system, and in the forward sweep the voltage of each bus is updated.

Another forward-backward sweep based power flow method for weakly meshed distribution systems is presented in [15]. This method calculates power flow in backward sweep, and voltage drop calculation is performed in forward sweep.

A method for short term unit commitment for autonomous systems with both renewable distributed and conventional generation units is presented in [16]. This work uses dynamic programming integrated with a standard unit commitment method to determine the next 24 hour generation amount of each generation unit in order to achieve minimum fuel consumption.

A short-term generation scheduling method for PV systems integrated with batteries is presented in [17]. Lagrangian relaxation-based method is used to determine the hourly charge and hourly discharge of batteries in this work. The economical impact of PV generation integrated with batteries, and peak load shaving due to use of this system is analyzed in this work. In this research, the authors have studied the impact of PV/battery systems in an eight bus system, and the results shoes that the utilization of PV/battery systems will reduce the cost of electricity producing. The impact of PV/battery system depends on the size of the PV/battery system and the environmental conditions. In this research it is shown that the PV system will supply the load and charge the batteries during noon hours and in evening batteries will took part in supplying the load.

Unit commitment method for a system contains thermal generation, wind generation, and solar generation units is presented in [18]. The unit commitment is solved using a new genetic algorithm method operated binary Particle Swarm Optimization (PSO), in this work. it is shown that the speed of convergence is boosted up by using this method in comparison with genetic algorithm only.

A probabilistic unit commitment formulation for generation scheduling of intermittent PV generation units or other intermittent generation units is presented in [19]. The impact of uncertainty of load forecast on the electricity cost is analyzed in this work. It is shown that the uncertainty of load has a higher impact than uncertainty of PV units. This is because that the PV units are available during day time but the load fluctuations will happen all the day.

Introducing DG units which have intermittent characteristic, cause changes in generation scheduling. The impact of thermal units integrated with PV generation units, on the reliability management is presented in [20]. Demand response with PV generation units is analyzed in this research. In this study, by considering a hybrid system (thermal units, and PV units) with 5% of penetration for PV units, it is shown that 57761$ will be saved in a day. In this study, the minimum load is 100 MW, and the maximum load is 900 MW, and the loss of load index is kept about 1.5%.

Uncertainty and variability of PV generation units influences the operation of power and distribution systems with high penetration rate of PV generation units. Impact of PV generation units on ramp rate requirement of power systems is analyzed in [21].

The system which is used in this study is IEEE 24 bus system. It is shown that the ramp rate requirements for the system with high penetration level of PV units

are decreased. Moreover, it is shown that by scattering the PV units through out the system, ram rater requirement will decrease more.

In reference [22] the authors are describing the method for sizing the stand alone PV system. In this work it is shown that supplying the load with a high level of reliability is possible, only if the PV system is oversized in comparison with the load. By oversizing the PV generation units sufficiently, if the solar irradiance became lower than the value that is predicted, it is possible to supply the load.

Up to my knowledge, the impact of PV generation units on the total production cost of electricity is not investigated. This is very important because in the future there will be self scheduling smart grids and the proposed algorithm might be used for them. Hence, in this thesis, impact of the PV generation unit on the total electricity production cost is discussed. PV unit is integrated with a distribution network. Economic impact of PV generation unit with different capacities on the cost of producing electricity is checked out. Moreover, the effect of uncertainties of environmental conditions, on the cost of producing electricity is discussed.

CHAPTER 3

PROPOSED SOLUTION METHODOLOGY

As discussed in the second chapter, the purpose of this thesis is to analyze the impact of PV generation unit on the cost of producing electrical energy. In this work, effect of PV generation unit with different capacity, on the cost of producing electrical energy, is discussed. Moreover, the effect of uncertainty of environmental conditions; solar irradiance, and ambient temperature, on the producing cost of electrical energy is discussed. In order to achieve this objective, a UC formulation, which is used to determine the unit states for 24 hour, is utilized. The UC calculates the least cost commitment and schedule in the presence of PV units. Afterwards, a distribution system load flow is used to check whether the distribution lines are overloaded with the generation values provided by the UC algorithm. This is done by software separate from UC since the distribution load flow is complex it is kept as a separate algorithm rather than integrating it into the UC algorithm. If violations are observed from the distribution load flow algorithm, then UC is run again with a limitation on the PV generation to remove the overload on these specific distribution lines because it is assumed that the whole output power of PV generators is fed to the system. It is assumed that a limitation could be imposed on the PV generation with the help of a variable resistor bank connected to the connection point of PV to the distribution system. The modeling of PV generation which is suitable for UC formulation, the UC formulation itself and distribution load flow are discussed in detail in the following sections.

In this thesis, the installation cost, and the bidding price of power generated by PV generator unit are not taken into consideration. Concentration of this work is on the production cost of electrical energy in the distribution systems.

In this chapter the proposed solution methodology for checking the impact of PV generation on the electricity production cost is described. The proposed solution methodology for this problem consists of performing unit commitment, checking the

feasibility of the result of unit commitment study, with respect to system constraints which will be done by using power flow in the network. If the result of unit commitment study does not violate the system constraints, then the result is feasible, otherwise some constraints will be imposed on generation amounts of the DG units, and it is needed to perform unit commitment study again with respect to these new constraints. The proposed solution methodology is shown as a flow chart in Fig. 3.1.

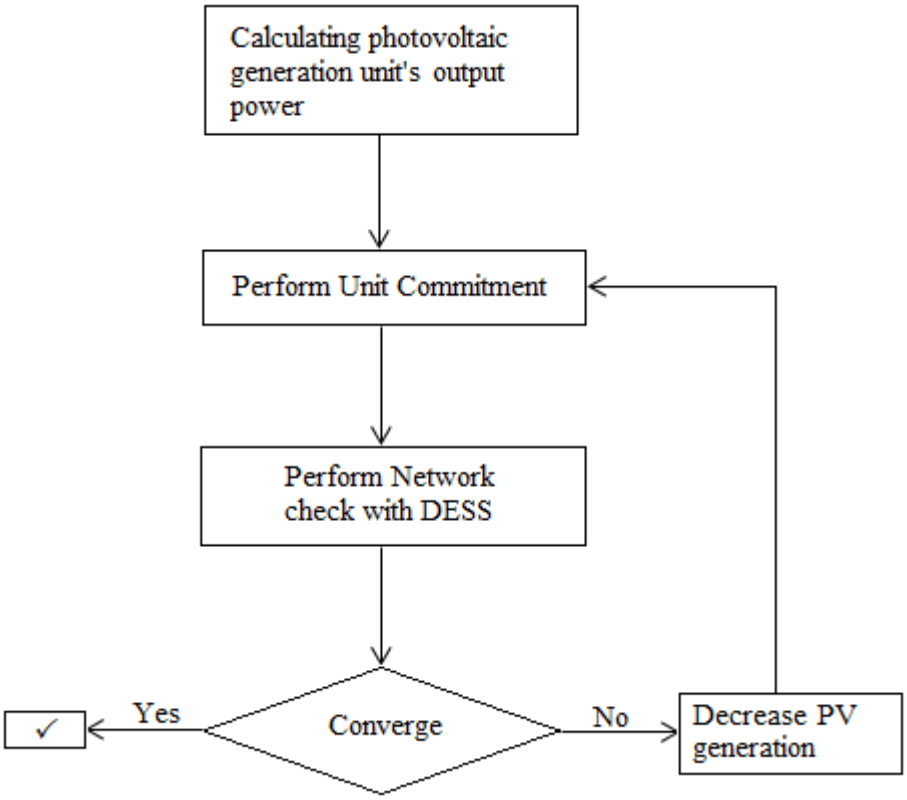

Figure 3.1 Proposed Solution Methodology

3.1. Unit commitment

As discussed in appendix A, objective of unit commitment is to minimize the cost of producing electricity. In this thesis Mixed Integer Linear Programming method is used in order to perform unit commitment study because the required time to solve UC problem by this method is considerably lower than other known methods. Input data of the unit commitment are generator information, bidding price of each generation unit, and load of system.

3.1.1. Mixed-Integer Linear Programing Unit Commitment

Determining the schedule of generating units in a power system considering device and operating constraints, is called unit commitment (UC) problem. The program

determines the level of generation of committed units in order to supply the expected demand while minimizing the operational cost.

Operating cost is consists of fuel cost, start up cost, shut down cost, and maintenance cost. System constraints are spinning and operating reserve, load balance, must run and must out units. Maximum and minimum capacity of generating units, minimum up and minimum down time, and ramp up and down rates, are utility constraints.

Because of the speed of MILP UC method, in this section a method based on MILP is used to solve UC problem. The MILP method includes cost function, variable startup costs, startup and shutdown ramping, unit capacity, power balance constraints, unit ramping constraints, minimum up/down constraints for each unit, and spinning and operating requirements.

The details of the MILP based UC is given in appendix A.

3.2. Network Check

It is needed to perform load studies to see whether there was any network's constraint violation or not. The generation amount of each generation unit is achieved by unit commitment study. If there is no network violation, the solution is achieved, otherwise it is needed to change the tap of voltage regulators and check the network again. If there is again violation in the network, it is needed to add constraints on the generation capacity of the generation units that causes the network violation and perform unit commitment again and check the network constraints.

In this thesis, power flow software named DESS is used. This software uses forward/backward sweep to perform load flow. DESS is a powerful software in order to perform power flow studies in distribution systems.

3.2.1. Forward/Backward sweep

One of the most important and fundamental calculations of a system is the steady state behavior, which represents the system's behavior when there is no disturbance in the system. In power system, the study of steady state behavior is called power flow or load flow studies. Because the R/X ratio in distribution lines is high, it is not appropriate to use conventional power flow methods in order to perform power flow studies on them. One of the most efficient power flow methods

for distribution systems is forward/backward sweep. This method is bifurcated into two stages; forward sweep, and backward sweep. Typical distribution systems have a radial structure with one unique path from one bus to other bus. Forward/backward sweep fully exploits this characteristic of distribution systems. Moreover, this method is also suitable to perform power flow studies in the weekly meshed, and multi source distribution systems.

Backward sweep updates the current and voltage of each bus in a lateral, by using the fact that the out going current from the last bus of each lateral is zero. Backward sweep starts with the last bus of each lateral and goes to the first bus of each lateral. Backward sweep starts with the last lateral of distribution network and moves toward the first lateral of that distribution network.

Forward sweep updates the voltage and current of each bus, considering that the voltage of first bus of each lateral is known. The forward sweep starts with the first lateral and moves toward the last lateral of distribution networks. Forward sweep starts to update the voltage and current of first bus of each lateral and moves toward the last bus of each lateral.

Forward/backward sweep power flow method is discussed in appendix C, in detail.

3.3. PV Generation Unit

The output power of a PV generation unit depends on the environmental conditions, so PV generation units have intermittent characteristics. A PV generation unit is consists of two parts; PV panels, and power conditioning unit. PV panels are consists of PV cells, bypass diodes, isolating diodes, and blocking diodes. By connecting PV panels in series and parallel, the desired voltage and output power will be achieved.

The power conditioning unit is consists of DC/DC converter, and a DC/AC inverter. The DC/DC converter is maximum power point tracker which assures that the maximum power is fed to the DC/AC inverter. There are two control scheme to control the DC/AC inverter; current control, and voltage control scheme. By using current control scheme the current and power of PV generation unit will be controlled, and by using voltage control scheme, voltage and power of PV generation unit will be controlled.

By absorbing solar irradiance, PV panels generate DC power, this power is fed to the maximum power point tracker where the operating point is set on the maximum possible value, and then the DC/AC inverter produces the AC power which will be fed to the grid. PV modeling is discussed in appendix D, in detail.

CHAPTER 4

CASE STUDY AND RESULTS

In the case studies five different levels of generation by photovoltaic generation units is considered (200 kW, 400 kW, 600 kW, 800 kW, and 1000 kW). The impact of these photovoltaic units on the production cost of electricity is studied, by integrating them to the distribution system one by one, and the changes in the cost of producing electricity are discussed. Moreover, $\pm 10\%, \pm 15\%, \pm 20\%$ of uncertainty are imposed to the environmental condition, and the effect of these uncertainties on the total cost of producing electricity is discussed.

In this chapter, the unit commitment is performed on the IEEE 34 bus test feeder. In order to perform simulation on the IEEE 34 bus test feeder, the model discussed in the Appendix C, is integrated with the unit commitment solver coded in MATLAB. In order to perform the unit commitment study on the distribution system, the environmental conditions (hourly sun irradiance, and hourly ambient temperature), hourly load level, and system properties (parameters of the distribution lines, shunt capacitors, voltage regulators, etc.) are used as input data.

4.1. IEEE 34 Bus Test Feeder

The distribution system used in this thesis is the IEEE 34 bus test feeder which is an actual system installed in Arizona, U.S. The test distribution system and is shown in Fig. 4.1and the Fig. 4.2 presents the lateral level indexing order of the system.

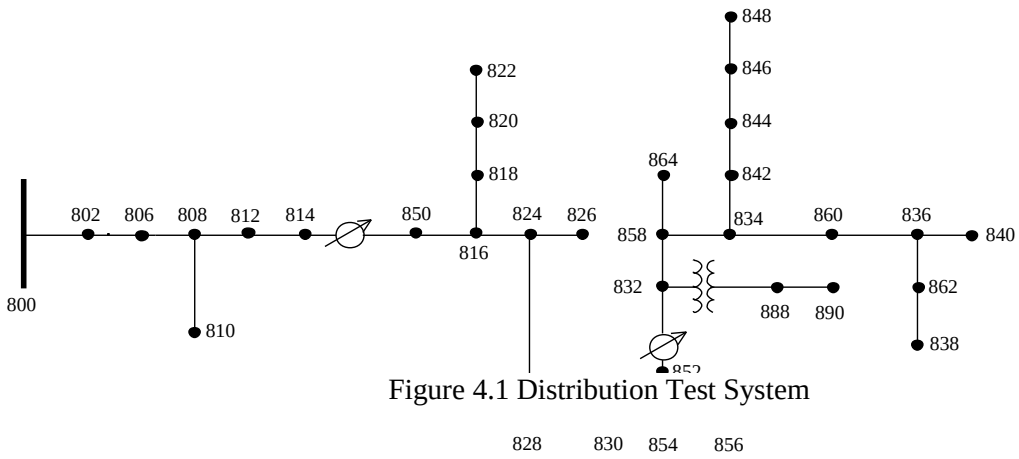

Figure 4.1 Distribution Test System

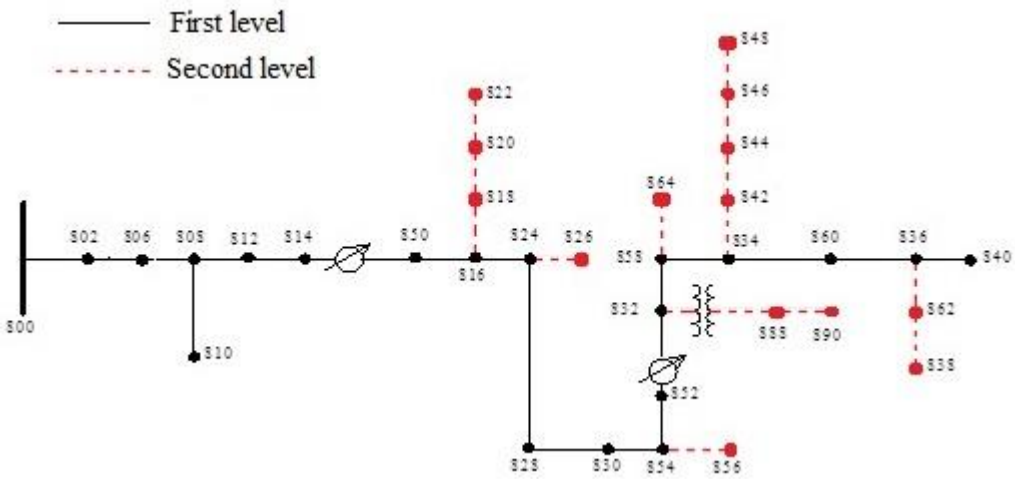

Figure 4.2 Lateral Indexing Order

Daily load of the system is given in Table 4.1.

Table 4.1 Daily Load

Hour	Load (W)
1	200000
2	220000
3	245000
4	270000
5	290000
6	340000
7	385000
8	400000
9	410000
10	425000
11	500000
12	500000
13	500000
14	320000
15	410000
16	500000
17	480000
18	470000
19	460000
20	350000
21	295000
22	201050
23	180020
24	172000

4.2. Environmental Conditions

Environmental conditions; ambient temperature and solar irradiance are used as input data to calculate the DC output power that is produced by photovoltaic generator. These data is used by the model developed in MATLAB. After calculating generated DC power, the program coded in MATLAB calculates the AC output power. Hourly ambient temperature and solar irradiance are given in Fig. 4.3 and Fig. 4.4, respectively.

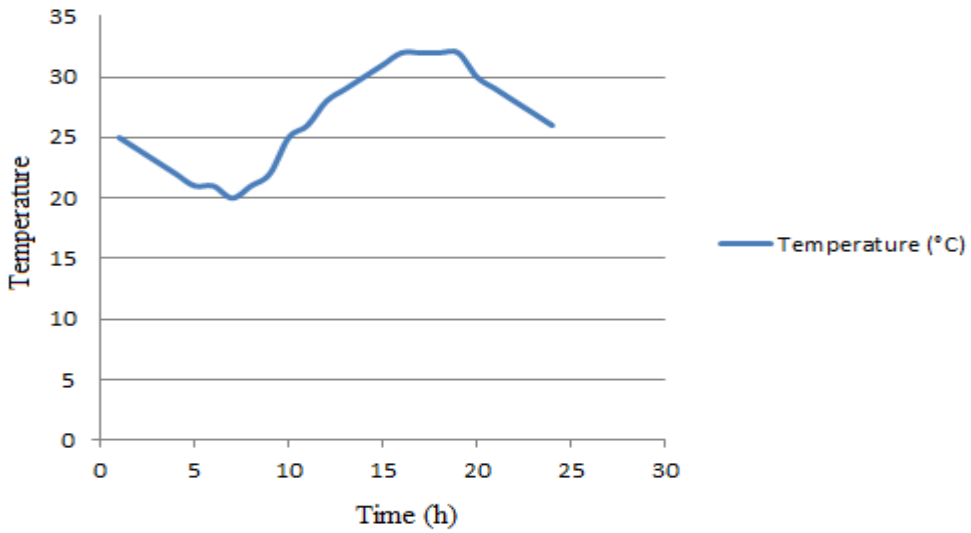

Figure 4.3 Hourly Ambient Temperature

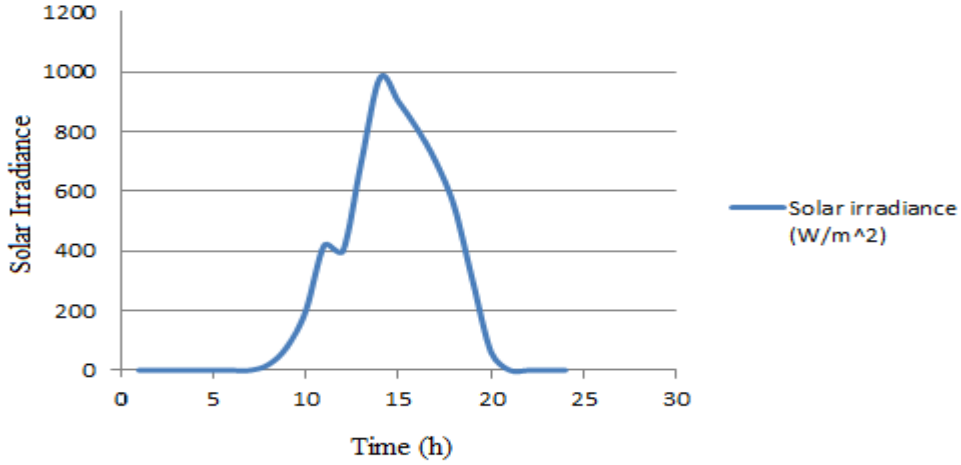

Figure 4.4 Hourly Irradiance

The block diagram of the computation of the output AC power is shown in Fig. 4.5.

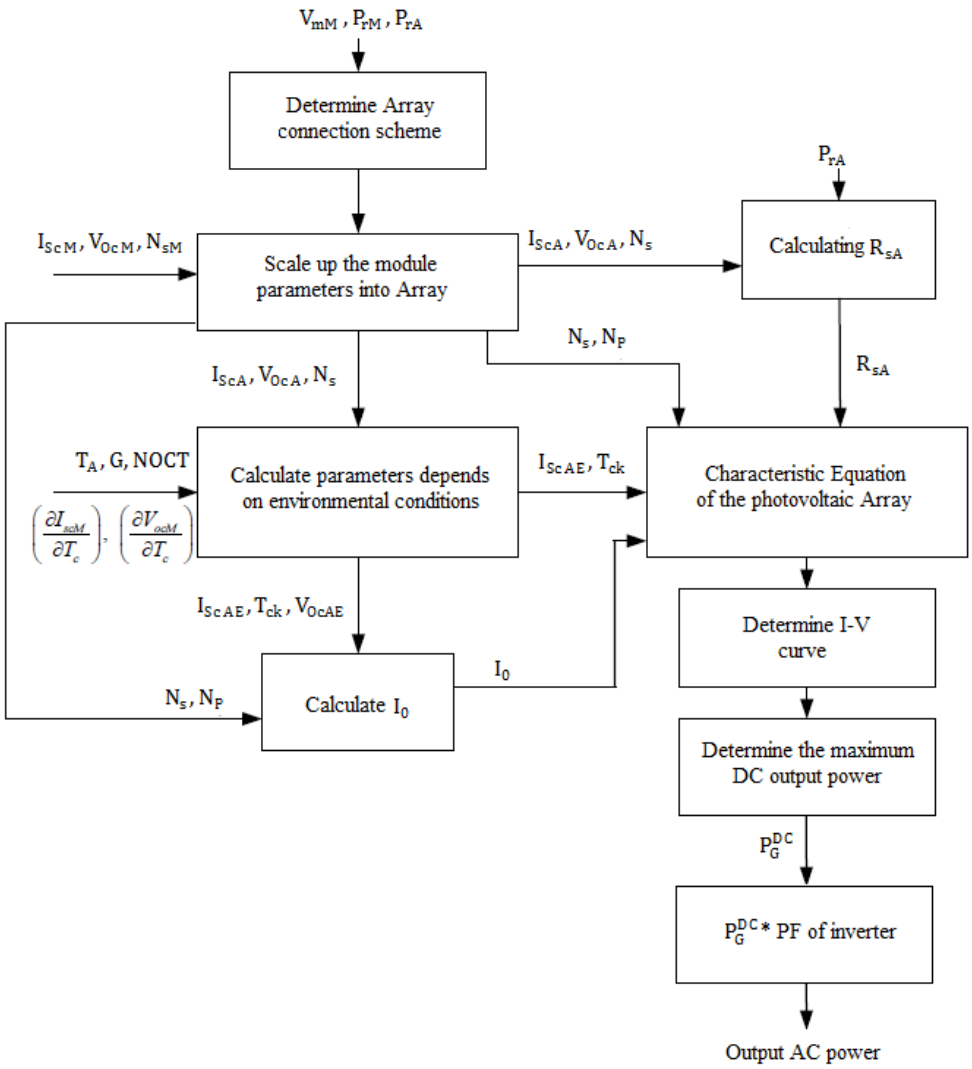

Figure 4.5 Block Diagram of Computing Output AC Power

A PV generation unit is consists of series and parallel connection of PV modules. Hence, in order to calculate the output AC power of a PV generation unit it is necessary to determine the number of modules in series and parallel. In order to determine the connection of PV modules, V_{mM}, P_{rM}, P_{rA}, which are maximum power point voltage of a PV module, rated DC power of a PV module, and rated power of PV generation unit are used. By putting these values in the equation (C.2) the connection scheme of PV generation will be determined. After determination of PV array connection, by using the number of series and parallel PV modules obtained from the last step the short circuit current (I_{ScM}), and open circuit voltage (V_{OcM}) of a PV module will be scaled up to the open circuit voltage and short circuit current of

the PV generation unit. After scaling up the short circuit current and open circuit voltage of PV module into the short circuit current and open circuit voltage of the PV array, the short circuit current and open circuit voltage of PV array under the given environmental conditions, series resistor of the PV array, will be computed, then diffusion current of PV array (I_0) will be calculated. By putting the calculated values of short circuit current, open circuit voltage, diffusion current, and series resistor of the PV array into the characteristic equation (C.6) the I-V characteristic of PV array will be computed. From the I-V characteristic of PV array the maximum DC output power of PV generation unit is determined, then by multiplying the output DC power to the power factor of DC/AC invertor the maximum AC out put voltage will be computed.

4.3. Simulation Studies

In this thesis, by considering two scenarios, the impact of DGs on the cost of producing electricity is investigated. In each scenario, there will be seven conditions and in each condition, the generation capacity of PV will be differed and there will be uncertainties on the environmental conditions. In the studies the installation and maintenance cost of the PV generation unit is not taken into consideration, and the only important factor is fuel cost of producing electrical energy.

Because of intermittent characteristic of PV generation the output power will change by the change in the environmental conditions. In the studies, it is assumed that the environmental conditions will change in an hourly step. Hence, the output power of PV generation unit will be calculated for each hour for 24 hours. The environmental conditions are for Ankara on 18th of August 2013.

By using the security constraint unit commitment (SCUC) the cheapest generation units will be assigned and other generation units will be assigned by taking the system and generation unit's constraints. The unit commitment studies are done on an hourly bases. After completing the task of committing generation units, total cost of producing electricity is calculated.

Distributed generator's and the substation's information is given in Table 4.2, and System operating and spinning reserves are given in Table 4.3.

Table 4.2 DG and substation information

	P Min (kW)	P Max (kW)	Min up time (h)	Min down time (h)	RU (kW)	RD (kW)	MSR (kW)	QSC (kW)	Initial status	Initial hour	Initial (kW)	No load cost	Shutdown cost
G2	0	180	1	1	55	60	1.5	20	1	1	110	8	0
G3	0	180	1	1	50	60	2	20	1	1	70	12	5
Substation	0	700	1	1	100	100	2	20	1	1	35	20	4

Table 4.3 System Reserves

Time	**1**	**2**	**3**	**4**	**5**	**6**	**7**	**8**	**9**	**10**	**11**	**12**
SR (kW)	5	9	8	10	11	13	10	9	8.3	8	7	9.5
OR (kW)	3.5	4.2	7.1	5.3	6	4.2	1.3	6.2	4.5	2.3	6.4	4.25
Time	**13**	**14**	**15**	**16**	**17**	**18**	**19**	**20**	**21**	**22**	**23**	**24**
SR (kW)	10.25	10.6	10	8	9	4	6	3	5	7	8	10
OR (kW)	3.36	11	14	10	6.54	11	10.6	10	11	12	5	6

The generators and substation bidding prices are given in Table 4.4, and start up cost of generators is given in Table 4.5.

Table 4.4 Bidding

Unit Name	**Bidding Segment**	**kW**	**Price ($/kW)**
G_1	1	50	2
G_1	2	50	2.5
G_1	3	40	2.4
G_1	4	40	3
G_2	1	50	2.4
G_2	2	50	2.6
G_2	3	40	2.8
G_2	4	40	3
PV	1	Max	0
Substation	1	700	3

Table 4.5 Start up Cost

	Time	Cost	Time	Cost	Time	Cost
PV	1	0	–	–	–	–
G_1	1	2	2	2.3	3	3.4
G_2	1	2.2	2	3.2	3	4.5
Substation	1	2.7	–	–	–	–

4.3.1. First Scenario

The placement of the DGs in this scenario is shown in Fig. 4.6.If the output power of PV became more than the maximum load at a certain time, the excess of generated power will be consumed by a variable resistor.

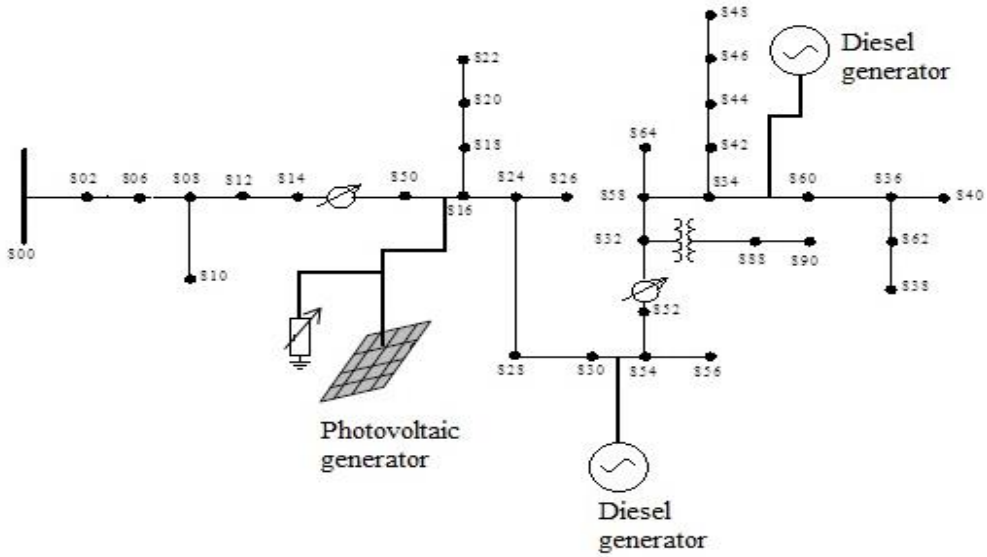

Figure 4.6 Placement of DGs in the System

4.3.2. Second Scenario

In this scenario the placement of PV generation unit is deferent from the last scenario. The placement of PV unit is shown in Fig. 4.7.

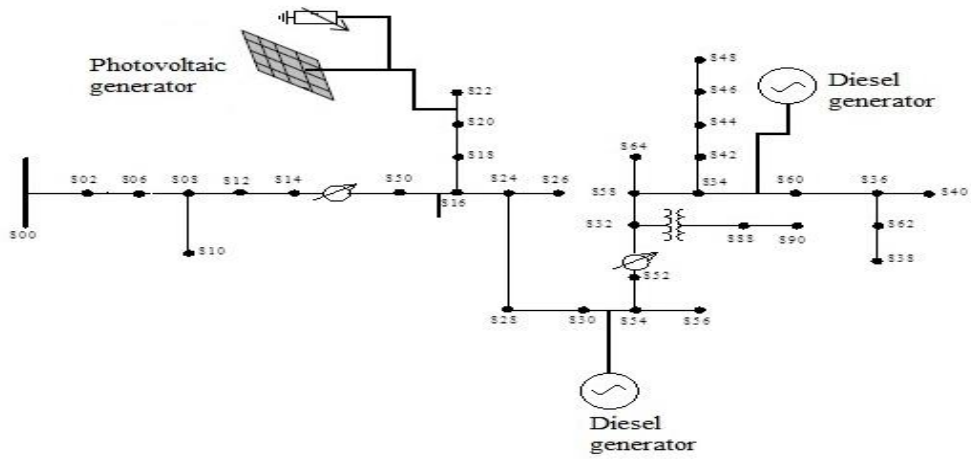

Figure 4.7 Placement of DGs in the System

4.4. Simulation Results

Generated power of PV generation unit is shown in Tables 4.6 through 4.10.

Table 4.6 Generated Power of 200kW PV Unit

Hour	200 KW	10%	-10%	15%	-15%	20%	-20%
1	0	0	0	0	0	0	0
2	0	0	0	0	0	0	0
3	0	0	0	0	0	0	0
4	0	0	0	0	0	0	0
5	0	0	0	0	0	0	0
6	0	0	0	0	0	0	0
7	0	0	0	0	0	0	0
8	2311	2509.0419	2106.609	2606.071	1986.593	2701.611	1896.658
9	14112	15173.423	12996.38	15680	12413.69	16172.08	11815.35
10	55415	58027.155	52378.07	59202.23	50686.92	60258.21	48872.7
11	107442	110191.95	103915.6	111337.2	101793.3	112353.1	99399.22
12	144000	145436.39	142037.7	147924.6	140789.7	146511.7	139314.1
13	181296	182579.17	179507.3	183084.7	178360.3	183512.4	176979.9
14	199903	201140.79	198142.4	201621	197011.3	202026.4	195645.4
15	145332	146762.2	143377.4	147334.3	142137.9	147826.9	140660
16	111762	113763.38	109117.1	114580.7	107476.1	115295	109413.1
17	74779	77507.084	71456.14	78676.97	69539.11	79733.79	67435.29
18	46170	48537.782	43461.96	49600.65	41971.13	50593.37	40385.6
19	3153	3342.1537	2889.021	3528.724	2752.898	3648.642	2614.051
20	0	0	0	0	0	0	0
21	0	0	0	0	0	0	0
22	0	0	0	0	0	0	0
23	0	0	0	0	0	0	0
24	0	0	0	0	0	0	0

Table 4.7 Generated Power of 400kW PV Unit

Hour	400 KW	10%	-10%	15%	-15%	20%	-20%
1	0	0	0	0	0	0	0
2	0	0	0	0	0	0	0
3	0	0	0	0	0	0	0
4	0	0	0	0	0	0	0
5	0	0	0	0	0	0	0
6	0	0	0	0	0	0	0
7	0	0	0	0	0	0	0
8	4044.6	4391.203	4002.834	4513.92	3880.277	4536.131	3722.842
9	24696	26553.49	22743.66	27440	21723.96	28301.14	20676.87
10	96976	101547.3	91661.39	103603.6	88701.88	105451.6	85527.01
11	188024	192836.4	181852.8	194840.6	178138.7	196618.4	173949.1
12	252000	254513.7	248566	258868	246382	256395.5	243799.6
13	317268	319513.5	314137.8	320398.2	312130.5	321146.7	309714.8
14	378208	380549.8	374876.9	381458.3	372737	382225.5	370152.9
15	254331	256833.8	250910.4	257835	248741.3	258697.1	246155
16	195584	199086.4	190955.4	200516.7	188083.6	201766.7	191473.4
17	130868	135642.3	125052.8	137689.7	121697.9	139539.2	118016
18	80798	84941.64	76058.9	86801.68	73449.94	88538.94	70675.23
19	5517	5847.974	5055.099	6174.428	4816.916	6384.255	4573.967
20	0	0	0	0	0	0	0
21	0	0	0	0	0	0	0
22	0	0	0	0	0	0	0
23	0	0	0	0	0	0	0
24	0	0	0	0	0	0	0

Table 4.8 Generated Power of 600kW PV Unit

Hour	600 KW	10%	-10%	15%	-15%	20%	-20%
1	0	0	0	0	0	0	0
2	0	0	0	0	0	0	0
3	0	0	0	0	0	0	0
4	0	0	0	0	0	0	0
5	0	0	0	0	0	0	0
6	0	0	0	0	0	0	0
7	0	0	0	0	0	0	0
8	5778	6273.148	5266.979	6515.74	4966.912	6754.611	4742.054
9	35280	37933.56	32490.94	39200	31034.23	40430.2	29538.38
10	138537	145067.4	130944.7	148005	126716.8	150645	122181.3
11	268605	275479.9	259789	278343	254483.2	280882.7	248498
12	360000	363591	355094.3	369811.4	351974.3	366279.3	348285.2
13	453240	456447.9	448768.4	457711.6	445900.7	458781	442449.7
14	540297	543642.5	535538.3	544940.3	532481.2	546036.2	528789.7
15	363330	366905.5	358443.5	368335.7	355344.7	369567.3	351650
16	279405	284408.5	272792.7	286451.7	268690.2	288237.5	273532.8
17	186948	193768.2	178640.8	196692.9	173848.2	199335	168588.7
18	115425	121344.5	108654.9	124001.6	104927.8	126483.4	100964
19	7882	8354.854	7222.094	8821.25	6881.808	9121.026	6534.712
20	0	0	0	0	0	0	0
21	0	0	0	0	0	0	0
22	0	0	0	0	0	0	0
23	0	0	0	0	0	0	0
24	0	0	0	0	0	0	0

Table 4.9 Generated Power of 600kW PV Unit

Hour	800 KW	10%	-10%	15%	-15%	20%	-20%
1	0	0	0	0	0	0	0
2	0	0	0	0	0	0	0
3	0	0	0	0	0	0	0
4	0	0	0	0	0	0	0
5	0	0	0	0	0	0	0
6	0	0	0	0	0	0	0
7	0	0	0	0	0	0	0
8	7915.86	8594.212	7215.761	8926.564	6804.67	9253.817	6496.614
9	48334	51969.4	44512.96	53704.44	42517.24	55389.83	40467.92
10	189796	198742.6	179394.5	202767.2	173602.4	206383.9	167388.7
11	367989	377407.6	355911.1	381330.1	348642.2	384809.5	340442.5
12	493200	498119.6	486479.2	506641.6	482204.8	501802.6	477150.7
13	620939	625333.8	614812.8	627065.2	610884.1	628530.1	606156.3
14	740207	744790.3	733687.6	746568.3	729499.4	748069.8	724441.9
15	497762	502660.4	491067.5	504619.8	486822.2	506307	481760.5
16	382785	389639.7	373726.2	392438.9	368105.7	394885.5	374740.1
17	256119	265462.7	244738.2	269469.6	238172.3	273089.2	230966.7
18	158132	166241.6	148857	169882	143750.9	173282	138320.4
19	10798	11445.79	9893.957	12084.73	9427.78	12495.41	8952.273
20	0	0	0	0	0	0	0
21	0	0	0	0	0	0	0
22	0	0	0	0	0	0	0
23	0	0	0	0	0	0	0
24	0	0	0	0	0	0	0

Table 4.10 Generated Power of 1000kW PV Unit

Hour	1000 KW	10%	-10%	15%	-15%	20%	-20%
1	0	0	0	0	0	0	0
2	0	0	0	0	0	0	0
3	0	0	0	0	0	0	0
4	0	0	0	0	0	0	0
5	0	0	0	0	0	0	0
6	0	0	0	0	0	0	0
7	0	0	0	0	0	0	0
8	10400.4	11291.67	9480.562	11728.33	8940.442	12158.3	8535.698
9	63504	68280.4	58483.7	70560	55861.61	72774.36	53169.09
10	249366.6	261121.3	235700.5	266409.1	228090.3	271160.9	219926.4
11	483489	495863.8	467620.2	501017.5	458069.8	505588.9	447296.5
12	648000	654463.8	639169.7	665660.5	633553.7	659302.7	626913.3
13	815832	821606.3	807783	823881	802621.2	825805.7	796409.5
14	972534.6	978556.5	963969	980892.6	958466.2	982865.2	951821.4
15	653994	660429.9	645198.3	663004.3	639620.5	665221.1	632970.1
16	472194.5	480650.3	461019.7	484103.3	454086.5	487121.3	462270.4
17	336506.4	348782.8	321553.5	354047.3	312926.8	358803	303459.6
18	207765	218420	195578.8	223202.9	188870.1	227670.2	181735.2
19	14187.6	15038.74	12999.77	15878.25	12387.25	16417.85	11762.48
20	0	0	0	0	0	0	0
21	0	0	0	0	0	0	0
22	0	0	0	0	0	0	0
23	0	0	0	0	0	0	0
24	0	0	0	0	0	0	0

In the First scenario, by using these amounts of generated power and putting them to the unit commitment program, share of each generator in supplying load at each hour will be computed. As it is apparent, the program will commit the PV generation units at their maximum output power as shown in Fig. 4.8. The total cost of generation for each level of capacity is shown in Table 4.11.

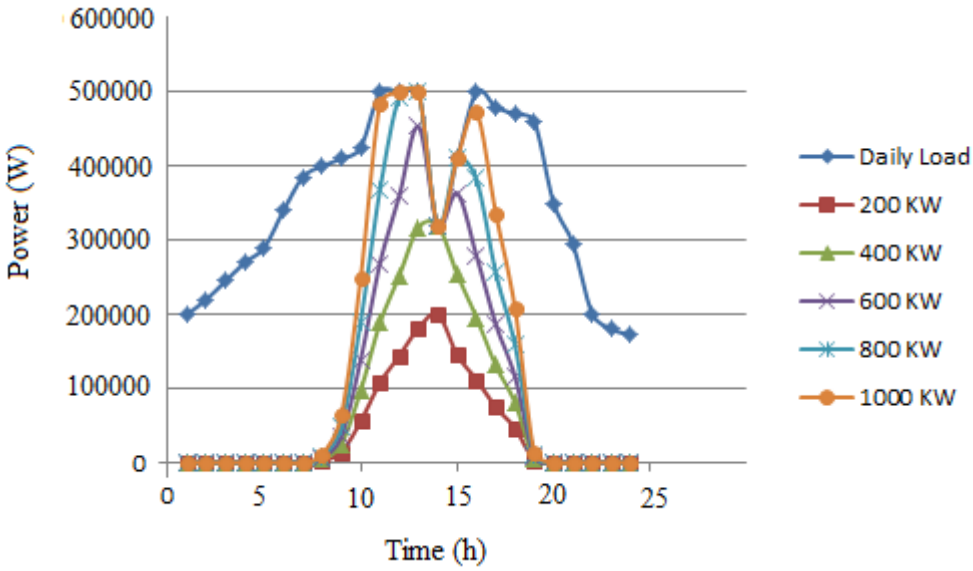

Figure 4.8 PV Power Generation

Table 4.11 Total Production Cost ($)

	Cost of Producing Electricity ($)						
	0%	10%	-10%	15%	-15%	20%	-20%
With out PV	26000	26000	26000	26000	26000	26000	26000
200 kW of PV	22620	22552	22688	22529	22778	22507	22778.5
400 kW of PV	20280	20179	20402	20118	20471	20097	20529
600 kW of PV	18200	18054	18371	17982	18473	17945	18557
800 kW of PV	16380	16216	16578	16151	16691	16085	16776
1000 kW of PV	15080	14892	15306	14809	15439	14748	15532

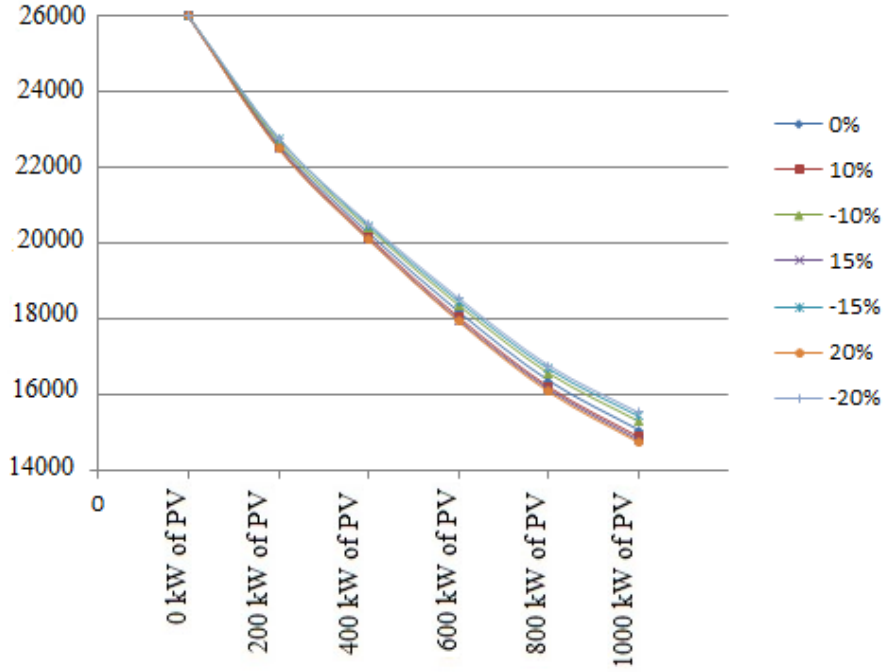

Figure 4.9 Production Cost ($)

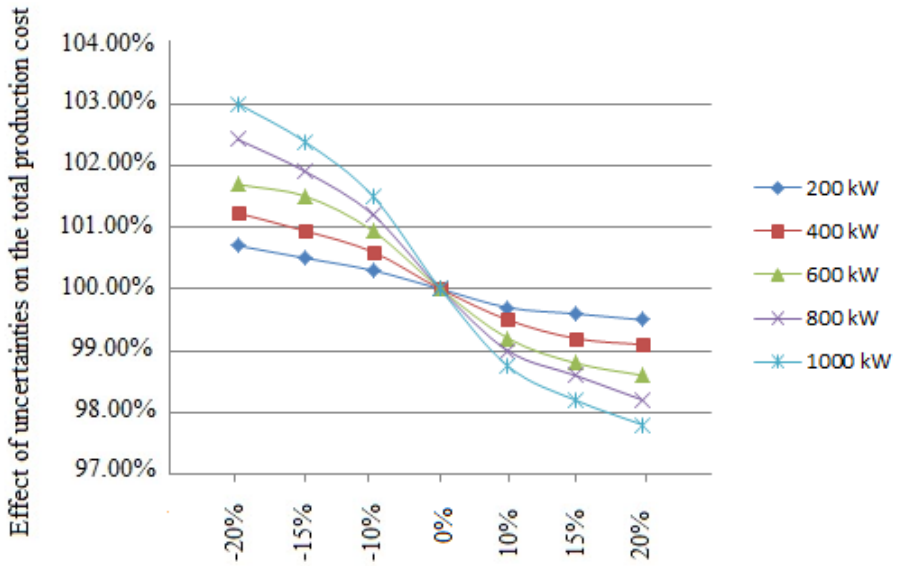

Figure 4.10 Effect of Uncertainties on the Total Production Cost

In the second scenario like the first scenario, the UC program will commit the PV generation unit with its maximum available capacity, and from UC point of view, there is no problem, but when the power flow values over the lines are obtained through the power flow algorithm, it is observed that the flow over the line where the PV unit is connected is exceeding the limits of the line for all values of PV

generation with capacities more than 400 kW.

This case can be explained easily since the maximum capacity of that line is 200kW and the load connected to the bus at the end of the line 180 kW. However, for more complicated systems this observation emphasizes the importance of power flow study where the violation can not be defected easily.

As it is shown in the Table 4.11 and Fig. 4.9, the cost of producing electricity will decrease by installing PV generators, but the cost will not decrease linearly. This phenomenon is because of the actual output power of PV is different from its nominal values. As it is shown in Fig. 4.10, the effect of uncertainties on the total cost of electricity production is between 0.3% and 3% of the total cost. Effect of uncertainties on the PV generation units with higher generation capacity, is higher than the PV generation units with lower generation capacity. Hence, in order to have precise UC, it is necessary to have precise forecast of environmental conditions for PV generation units with high generation capacity.

CHAPTER 5

CONCLUSION

5.1. Conclusion

In this thesis, the impact of PV generation unit on the total cost of electricity production is investigated. In order to investigate this issue, first the output power of PV generation unit is computed by using the environmental conditions. After computing the output power of PV units, the computed power is used by the program coded in MATLAB to perform UC studies. After performing UC studies the answer of UC study is used to perform power flow studies. After performing power flow studies, if there is no network violation the answer is expected as feasible, otherwise the procedure is repeated by reducing the capacity of PV generation unit.

In this thesis, two scenarios are investigated, in the first scenario the PV unit is connected to the main feeder, and for the second scenario the PV generation unit is connected to a sub-lateral of the network, then the impact of installing PV generation units on the cost of electricity production is investigated. Purpose of the second scenario is to show the importance of power flow studies.

The total cost of generating electricity without installing any PV generator is 26000 $ and it drops to 15080 $ when 1000 kW of PV is installed. As it is discussed in chapter 4, in the first scenario the total cost decreases by increasing the installed PV generation capacity. However it is observed that this decrement is not linear. The nonlinearity of decrement in the cost is due to practical aspect of PV generators. The decrement of electricity production cost changes between 13% and 42% for each 200 kW PV capacity addition. On the other hand the effect of uncertainties on the decrement value varies between .3% and 3% from 200 kW to 1000 kW of installed PV capacity respectively. The results obtained are indicating that the increase of PV generation is decreasing the total cost of electricity, however, the increase of PV generation capacity is

also effecting the impact of uncertainty adversely. I believe that the developed algorithm in the thesis, will have a great potential to be used by

distribution companies to evaluate the impact of uncertainty of PV generation to its daily generation cost.

The second scenario studied in the thesis is to emphasis the importance of using load flow analysis to perform a proper unit commitment in the system without violating the operational constraints especially for complex systems.

More realistic results can be obtained if the installation and operational costs of PV generators are included in the study.

5.2. Future works

Impact of PV generation units with capacities higher than 10 kW on the voltage profile and loss savings, in distribution systems could be a good field to be investigated. Moreover, the impact of hybrid DGs on the reliability of distribution networks is another field which is worthwhile to be investigated.

Investigation of the impact of DGs on the reliability of smart grids, and micro grids, is another worthwhile field.

REFERENCES

[1] CIGRE. Impact of Increasing Contribution of Dispersed Generation on the Power System. Working Group 37.23 1999.

[2] Willis, H. Lee and Scott, Walter G. Distributed Power Generation, planning and Evaluation. Marcel Dekker Inc., 2000.

[3] Hunt, Sally and Shuttleworth, Graham. Competition and Choice in Electricity. England, John Wiley & Sons, 1996.

[4] L. Castaner and S. Silvestre, Modeling Photovoltaic Systems using PSpice. West Sussex, England, Wiley, 2002.

[5] F. Ma and D. Curtice, "Distribution Planning and Operations with Intermittent Power Production," IEEE Transactions on Power Apparatus and Systems, vol. 8, pp. 2931, August. 1982.

[6] F. Ma and L. Isaken, "Impact of Dispersed Supply Management on Electric Distribution Planning and Operations," IEEE Transactions on Power Apparatus and Systems, vol. 5, pp. 1531, Sept/Oct. 1979.

[7] T. Hoff and D. S. Shugar, "Value of grid-support photovoltaics in reducing distribution system losses," IEEE Transactions on Energy Conversion, vol. 10, Sept. 1995.

[8] H. Chihchiang and S. Chihming, "Study of maximum power tracking techniques and control of DC/DC converters for photovoltaic power system," Power Electronics Specialists Conference, 1998. PESC 98 Record. 29th Annual IEEE, vol. 1, pp. 86, May 17-22. 1998.

[9] T. Ishikawa, "Grid-connected photovoltaic power systems: Survey of inverter and related protection equipments," International Energy Agency (IEA), Tokyo Japan, Tech. Rep. IEA-PVPS T5-05: 2002, December, 2002.

[10] K. N. Miu, H. -. Chiang and G. Darling, "Capacitor placement, replacement and control in large-scale distribution systems by a GA-based two-stage algorithm," IEEE Transactions on Power Systems, vol. 12, pp. 1160 - 1166, Aug. 1997.

[11] J. C. Wang, H. D. Chiang, K. N. Miu and G. Darling, "Capacitor placement and real time control in large-scale unbalanced distribution systems: loss reduction formula, problem formulation, solution methodology and mathematical justification," IEEE Transactions on Power Delivery, vol. 12, pp. 953 - 958, April 1997.

[12] M. E. Baran, F. F. Wu, “Optimal Sizing of Capacitors Placed on a Radial Distribution System”, IEEE Transactions on Power Delivery, Vol. 4, No. 1, January 1989, pp. 735-742.

[13] C. S. Cheng , D. Shirmohammadi, “A Three-Phase Power Flow Method for Real Time Distribution System Analysis”, IEEE/PES 1994 Summer Meeting, San Francisco, CA, July 1994, 94 SM 603-1 PWRS.

[14] W. H. Kersting , W. H. Phillips, “A Radial Three-phase Power Flow Program for the PC”, Conference paper, presented at 1987 Frontiers Power Conference, Stillwater, OK, October 1987.

[15] G.X. Luo , A. Semlyen, “Efficient Load Flow for Large Weakly Meshed Networks”, IEEE Transactions on Power Systems, Vol. 5, No. 4, November 1990, pp. 1309-1316.

[16] A. G. Bakirtzis, P. S. Dokopoulos, “Short Term Generation Scheduling in a Small Autonomous System with Unconventional Energy Sources”, IEEE Transactions on Power Systems, Vol. 3, No. 3, August 1988.

[17] M. Shahidehpour, B. Lu, “Short-Term Scheduling of Battery in a Grid-Connected PV/Battery System”, IEEE TRANSACTIONS ON POWER SYSTEMS, VOL. 20, NO. 2, MAY 2005.

[18] Senjyu, T., Chakraborty, S., Saber, A.Y., Toyama, H., Yona, A., Funabashi, T., “Thermal Unit Commitment Strategy with Solar and Wind Energy Systems Using Genetic Algorithm Operated Particle Swarm Optimization”, 2nd IEEE International Conference on Power and Energy (PECon 08), December 1-3, 2008, Johor Baharu, Malaysia.

[19] Xiong Peng , Jirutitijaroen, P., “A Probabilistic Unit Commitment Problem with Photovoltaic Generation System”, TENCON 2009 - 2009 IEEE Region 10 Conference.

[20] K. Chandrasekaran, Sishaj P Simon, “Demand response scheduling in SCUC problem for solar integrated thermal system using firefly algorithm”, IET Conference on Renewable Power Generation (RPG 2011).

[21] Amir Saman Arabali, Payman Dehghanian, Moein Moeini-Aghtaie, and Ali Abbaspour, “The Impact of Dispersed PV Generation on Ramp Rate Requirements”, 11th International Conference on Environment and Electrical Engineering (EEEIC), 2012 .

[22] Supakit Saengthong, Suttichai Preinrudeepreechacharn, “A Simple Method in Sizing Related to the Reliability Supply of Small Stand-Alone Photovoltaic Systems”, Photovoltaic Specialists Conference, 2000. Conference Record of the Twenty-Eighth IEEE.

[23] Lütfü Şağbanşua, Vedat Kıray , “Analyzing Applicability of Solar Power Usage with State Support in Buildings”, Turgut Özal University, Ankara.

[24] Go solar company, “Shell Solar Panels SQ Series”, http://www.solarexpert.com/Shell/Shell-SQ.html, 2006.

APPENDIX A

UNIT COMMITMENT

Assume that there are N generation units; it is not economical to commit enough units to cover the maximum load of system and leave the running, because each unit consumed energy which is expensive. Hence it is needed to commit some of them for some time and let them be offline for the times they are not needed. The procedure of committing sufficient units for each provided time is unit commitment. The purpose of unit commitment is supplying expected demand by committing units while keeping the operational cost at a minimum value. Unit commitment is done for a period of time like 24h of a day or 168h of a week. There are three categorizations for generating units based on the number of time hours they are operated.

Bas load units: generating units which are run for 24h are categorized as base load units. Units like large fossil fired units and nuclear units fall into this group. In order to keep the thermal balance of system, output of these units must remain constant.

Intermediate units: generating units which are controllable, run must of the time, and not necessarily full loaded, are considered as intermediate units. Hydropower units, and small scale thermal units are regarded this type of units.

Peaking units: are committed for a few hours, in a day, used to supply load at peak load time. Hydro units, pumped hydro storage, gas turbine generators, and compressed gas units are regarded of peaking units.

Since human activities follow cycle, many utilities which give service to large population of people experience cycles. Electric power system is one of these utilities which has daily and weekly load pattern; load patterns exhibit highly variation between peak and off peak hours, for instance, total electricity consumption on day time and early evening is higher than late evening and early morning when most of the population is asleep. Even in a week, total electric energy consumption during weekday is higher than weekends. If sufficient generating units committed to satisfy the peak load during the day time, it is possible that some of them can be shut

down or operated near their minimum limits, during off peak time. Determining which units must be committed and which of them should be shut down, is the problem that system operator is confronted with.

Since the most important criterion in power system to meet is supplying the power demand, it is necessary to use an operating plan to run the system by minimum cost while satisfying the main criterion. Thermal power generation units are used to meet most of the power demand in most of the power systems, and also they are a good choice to supply high-quality power to consumers, while keeping the price of electric power at its minimum. In order to solve UC problem, varies of methods have been developed, some of them are theoretically complicated and highly complex, while some of them are so simple.

Operation scheduling has some consequences, and one of the most important one is economical outcome. Fuel cost has the major impact on electricity price, so it is possible to save a huge amount of money, by reducing the fuel cost even with a little percent like 0.5%. So as it is seen UC is a very important task in the operation of power systems.

A.1. Unit commitment Formulation

Determining the schedule of generating units in a power system considering device and operating constraints, is called unit commitment (UC) problem. The result of UC is that which units must be on and which of the must be off, type of fuel, and power generation for each unit. Typical UC formulation is as follows.

Minimize operation cost

Subject to
- System constraints, like reserve constraints, load balance, etc.
- Unit constraints, like unit capability limit, minimum up-time, minimum
- Up-down, Ramp up constrains, etc.

So the first stage is modeling the operational cost of generation units and calculating the constraints.

A.1.1. Modeling Operating Cost

Operation cost formula is.

$$OC = \sum_{i=1}^{N} \sum_{t=1}^{T} FC_{it}(P_{it}) + MC_{it}(P_{it}) + ST_{it} + SD_{it} \qquad (A.1)$$

Where

FC= fuel cost

MC= maintenance cost

ST= startup cost

SD= shutdown cost

N= number of generating units

T= planning time

P_{it} = Generation power of unit i at hour t

A.1.1.1. Fuel Cost

Fuel cost is generally modeled by a quadratic equation

$$FC_{it}(P_{it}) = a_i + b_i P_{it} + c_{it} P_{it}^2 \quad (A.2)$$

Where a, b, and c are cost coefficients.

A.1.1.2. Maintenance Cost

Maintenance cost is described as follows.

$$MC_{it}(P_{it}) = BM_i + IM_i P_{it} \quad (A.3)$$

Where IM is incremental maintenance cost, and BM is base maintenance cost for each unit.

A.1.1.3. Shut down Cost

Shut down cost is described as follows.

$$SD_{it} = KP_{it} \quad (A.4)$$

Where k is the incremental shut down cost.

A.1.1.A. Startup Cost

Startup cost is the cost energy needed to bring up temperature and pressure of thermal units to the standard value. Startup cost is described by

$$ST_{it} = TS_i + \left(1 - e^{-\frac{D_{it}}{AS_i}}\right) BS_i + MS_i \quad (A.5)$$

where TS is start up cost of turbine, boiler start up cost is BS, MS indicates start up maintenance cost, D is the down time hours, and boiler cool down coefficient is AS.

A.1.2. Constraints Modeling

There are some constraints in UC problem, such as power balance, spinning reserve, operating reserve, minimum up time, etc. The model of these constraints was described before.

A.1.2.1. Power Balance

Since there are some losses in power system, so it is necessary to take this amount to account with load balance constraint. Mathematical model of power balance is as follows.

$$\sum P_{it} u_{it} = D_t + loss_t \tag{A.6}$$

Where u_{it} is unit status indicator of unit i at hour t, D is load demand at time t, and loss is the loss at time t.

A.1.2.2. Spinning Reserve

Spinning reserve is the amount of generation available from each unit that is synchronized, minus the power that is fed to system. Spinning reserve must be available on power system in order to maintain frequency at its rated value in case of loss of one or more units; spinning reserve is provided by all on-line units around the power system, in order to avoid transmission lines limitations. Mathematical formulation of spinning reserve is as follows.

$$\sum_{i=1}^{N} r_s(i,t)\, u_{it} \geq R_s(t) \tag{A.7}$$

$$r_s(i,t) = \min\{10 * MSR(i), P_{gmax}(i,t) - P(i,t)\} \tag{A.8}$$

Where MSR (i) is maximum sustained Rate (MW/min) of unit i.

A.1.2.3. Operating Reserve

Operating reserve is the generating capacity of unloaded synchronized, unsynchronized units that can be ready in 10 minus. Operating reserve is described by equation (A.9).

$$\sum_{i=1}^{N} r_0(i,t)\, u_{it} \geq R_0(t) \tag{A.9}$$

Which a unit is synchronized, its operating reserve is equal to its spinning reserve.

A.1.2.4. Minimum Up/Down Time

The number of hours a unit must be on before it can be shut off is called minimum time, and the number of hours a unit must be off before it can be brought online is called minimum down time. These constraints are the most nonlinear

constraints in UC problem.

A.1.2.5. Must run/out unit

It is possible to run generating units without maintenance, hence sometimes generating units must be off for maintenance. Must out unit constraint implies these kind of units which are unavailable for commitment. On the other hand, some units must be online in order to ensure operating reliability, or some economic considerations. These units are called must run units.

A.1.2.6. Ramp Rated

Ramp up/down rated constraint implies the restriction on the movement of generating unit between adjacent hours.

A.2. MILP-based UC

There are many methods like priority listing, dynamic programming, integer and linear programming, mixed integer programming, etc. To solve the UC problem. In this dissertation, mixed integer linear programming is used to solve UC problem.

A.2.1. Methodology Formulation

In this section a method based on MILP is represented to solve UC problem. Represented MILP method includes cost function, variable startup costs, startup and

shutdown ramping, unit capacity, power balance constraints, unit ramping constraints, minimum up/down constraints for each unit, and spinning and operating requirements.

A.2.1.1. Cost Function

There are two types of cost functions, convex cost function and non-convex cost function. Hence there are two types of modeling one for convex and the other for non-convex cost functions.

A.2.1.1.1. Convex Cost Function

If the cost of electricity is being increased, its type is convex and it is modeled by set of equations given below.

$$C_{it} = C_{i0}u_{it} + \sum_m IC_{im}PX_{it,m}$$

$$P_{it} = \sum_m P_{it}X_{it,m} \qquad (A.10)$$

$$0 \leq PX_{it,m} \leq MW_{im}$$

Where

m= segment index

C_{io}= Not-load cost for unit i

IC_{im}= Incremental cost for unit i at segment m

$PX_{it,m}$= generated power of unit i at time t at segment m

MW_{im}= maximum MW for unit i at segment m

No-load cost is considered only if the unit is committed.

A.2.1.1.2. Non-convex Cost Function

If the price is not increasing, the cost function is non-convex function, and it is modeled by set of equations given in A.11.

$$C_{it} = C_{io}u_{it} + \sum_m IC_{im}Px_{it,m}$$

$$P_{it} = \sum_m Px_{it,m}$$

$$MW_{im}\delta_{it,1} \leq Px_{it,1} \leq MW_{i1}u_{it} \quad , m=1 \quad \text{first price} \qquad (A.11)$$

$$MW_{im}\delta_{it,m} \leq Px_{it,m} \leq MW_{i0}\delta_{it,m-1} \quad , \quad 2 \leq m \leq M-1$$

$$0 \leq Px_{it,m} \leq MW_{im}\delta_{it,m-1} \ , \quad m = M \quad \text{Last price}$$

Where $\delta_{it,m}$ is represented to show the proportions of intervals, and its value is between '0' and '1'. $\delta_{it,u}$ is always zero and $\delta_{it,0}$ is always the same as u_{it}.

A.2.1.2. Startup and Shutdown Indicator

To represent startup and shutdown cost it is useful to use startup and shutdown indicators. Startup and shutdown indicators are defined as follows.

If $u_{it} = 1, u_{i,t-1} = 0 \Longrightarrow y_{it} = 1$ and $z_{it} = 0$

If $u_{it} = 0,$ and $u_{i,t-1} = 1 \Longrightarrow y_{it} = 0$ and $z_{it} = 1$

If $u_{it} = 0$, and $u_{i,t-1} = 0 \Longrightarrow y_{it} = z_{it} = 0$

If $u_{it} = 1 = u_{i,t-1} \Longrightarrow y_{it} = z_{it} = 0$

Where

y_{it}= startup indicator

z_{it}= shutdown indicator

These indicators are also useful to represent minimum up and down time, and startup and shutdown ramping.

A.2.1.3. Unit capacity

Capacity of units in each time is represented by equation (A.13).

$$PMIN u_{it} \leq P_{it} \leq PMAX\, u_{it} \qquad \text{(A.13)}$$

A.2.1.4. Spinning and Operating Reserves

Spinning reserve is the unloaded synchronized generation that can ramp up in a short time like 10 minutes, so it cannot exceed the difference between unit's maximum capacity and the current generation.

$$P_{it} + sr_{it} \leq PMAX_i \qquad \& \qquad 0 \leq sr_i \leq u_{it}[10 * MSR_i] \qquad \text{(A.14)}$$

Unlike spinning reserve, the operating reserve is the unloaded synchronized/unsynchronized generation capacity. Operating reserve of a unit is the same at its spinning reserve, if the unit is committed, and it is equal to units quick start capacity when the unit is not committed.

$$Or_{it} = Sr_{it} u_{it} + (1 - u_{it}) QSC_i \qquad \text{(A.15)}$$

Where QSC_i is the quick start capacity of unit 'i'.

A.2.1.5. Ramping up and Ramping down Constraints

Ramping up constraint implies the capacity of a unit to increase its output from time t to time t+1. Similarly ramping down constrain implies the capacity at a unit to decrease its output from time t to time t+1. It is also considered that the output at a unit right after it is started up and rights before it is shut down is its minimum capacity.

$$P_{it} - P_{i,t-1} \leq y_{it} PMIN_i + (1 - y_{it}) RU_i \qquad \text{(A.16)}$$

$$P_{i,t-1} - P_{it} \leq Z_{it} PMIN_i + (1 - Z_{it}) RD_i \qquad \text{(A.17)}$$

Where $RU_i$is ramp up rate of unit ‘i’ and RD_i is ramp down rate of unit ‘i’.

A.2.1.6. Minimum up and Minimum down Time Constraints

As discussed before, minimum up and minimum down times are the number of hours a unit must be on before it can be shut down and the number of hours a unit must be off before it can be brought online, respectively. When a unit is in operating or is

down initially, it is needed to determine that unit is in operating or is down, for how many hours. If the units is in operating or is down for less than the minimum up and down time it should be in operating or it should be off, until satisfying the minimum time constraints. The differences between the minimum up time and the initial operating time, which is the time that the unit should be in operating before it can be shut down, is defined by equation (A.18).

$$\mathrm{UT_i} = \max\{0, \min\{\mathrm{NT}, (\mathrm{MU_i} - \mathrm{TU_{i0}})\mathrm{U_{i0}}\}\} \qquad (A.18)$$

Where

$\mathrm{UT_i}$= number of hours that unit ‘i’ must stay online

NT= number of hours

$\mathrm{MU_i}$= minimum up time of unit ‘i’

$\mathrm{TU_{i0}}$= time that ‘i’ has been initially online.

$\mathrm{U_{i0}}$= initial commitment status of unit ‘i’

Similarly, the difference between minimum down time and the initial down time, which is the time that the unit must be down before it can be brought online, is represented by equation (A.19).

$$\mathrm{DT_i} = \max\{0, \min\{\mathrm{NT}, (\mathrm{MD_i} - \mathrm{TD_{i0}})(1 - \mathrm{U_{i0}})\}\} \qquad (A.19)$$

Where

$\mathrm{DT_i}$= number of hours, that unit ‘i’ must be down

$\mathrm{MD_i}$= minimum down time for unit ‘i’

$\mathrm{TD_{i0}}$= time that unit ‘i’ has been initially down.

Using equations (A.18) and (A.19), minimum up and minimum down time constraints are modeled by set of equation given in (A.20) and (A.21), respectively

$$\sum_{t=1}^{UT_i}(1 - u_{it}) = 0$$

$$\sum_{m=t}^{t+MU_i-1} u_{im} \geq MU_i y_{it} \qquad \forall\, t = UT_i + 1, \cdots, NT - MU_i + 1 \qquad \text{(A.20)}$$

$$\sum_{m=t}^{NT}(u_{im} - y_{it}) \geq 0 \qquad \forall\, t = NT - MU_i + 2, \ldots, NT$$

$$\sum_{t=1}^{DT_i} u_{it} = 0$$

$$\sum_{m=t}^{t+MU_i-1}(1 - u_{im}) \geq MD_i z_{it} \qquad \forall\, t = DT_i + 1, \cdots, NT - MD_i + 1 \qquad \text{(A.21)}$$

$$\sum_{m=t}^{NT}(1 - u_{im} - z_{it}) \geq 0 \qquad \forall\, t = NT - MU_i + 2, \ldots, NT$$

A.2.1.7. Start up Cost

The model represented here for startup cost is a variable cost model. Fig.A.1 shows an example of variable startup cost of a unit.

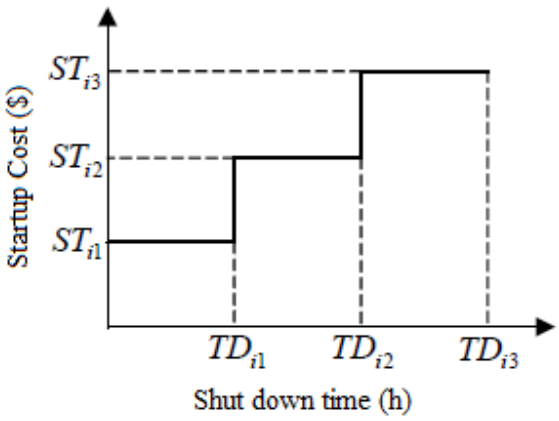

Figure A.1 Startup cost Curve for Unit i

To represent the variable startup cost, it is needed to define $v_{it,m}$, where $v_{it,m} = 1$, It shows that unit 'i' is started up at time 't+1', in 'mth' segment. At the end the variable startup cost is modeled as given in (A.22).

$$CST_{i,t+1} = \sum_m v_{it,m}\, ST_{im}$$

$$\sum_m v_{it,m}\left(TD_{i,m-1} + 1\right) \leq sd_{it} \leq \left(1 - y_{i,t+1}\right)MF_i + \sum_m v_{it,m} TD_{im}$$

$$\sum_m v_{it,m} = y_{i,t+1} \qquad \text{(A.22)}$$

$$0 \leq sd_{it} \leq MF_i(1 - u_{it})$$

$$1 - (MF_i + 1)u_{it} \leq sd_{it} - sd_{i,t-1} \leq 1$$

Where MF is the maximum time that a unit could be down, and sd_{it} is shut down time of unit 'i'.

The explicit form of MILP based UC is given in equations (A.23), (A.24), and (A.25).

$$\mathrm{Min} C * X \tag{A.23}$$

subject to

$$A * X \leq b \tag{A.24}$$

$$A_{eq} * X = b_{eq} \tag{A.25}$$

Where

$C = [0, \dots, 0, IC_{1,1}, \dots, IC_{N,m}, C_{10}, \dots, C_{N0}, 0, \dots, 0, 0, \dots, 0]_{1*n}$

$X^T = [P_{11}, P_{12}, \dots, P_{Nt}, px_{11,1}, \dots, px_{Nt,m}, u_{11}, \dots, u_{Nt}, sr_{11}, \dots, sr_{Nt}, or_{11}, \dots, or_{Nt}]_{1*n}$

$P_{it} = \sum_m P_{it} X_{it,m}$

$$b^T = \begin{bmatrix} PMAX_1, \cdots, PMAX_N, -PMIN_1, \cdots, -PMIN_{N,} RU_1, \cdots, RU_N, RD_1, \cdots, RD_n, MW_{1,1} \\ , \cdots, MW_{N,m}, \\ 0, \cdots, 0, -SR_1, \cdots, -SR_t, -OR_1, \cdots, -OR_t \end{bmatrix}_{1*m}$$

$b_{eq}^T = [D_1, \cdots, D_t\ ]_{1*t}$

$$
\mathrm{A} = \begin{bmatrix}
1,0,\cdots,0,0,\cdots,0,0,\cdots,0,0,\cdots,0,0,\cdots,0 \\
\vdots \\
0,\cdots,0,1,0,\cdots,0,\ 0,\cdots,0,0,\cdots,0,0,\cdots,0 \\
-1,0,\cdots,0,0,\cdots,0,0,\cdots,0,0,\cdots,0,0,\cdots,0 \\
\vdots \\
0,\cdots,0,-1,0,\cdots,0,\ 0,\cdots,0,0,\cdots,0,0,\cdots,0 \\
-1,1,0,\cdots,0,0,\cdots,0,0,\cdots,0,0,\cdots,0,0,\cdots,0 \\
0,-1,1,0,\cdots,0,0,\cdots,0,0,\cdots,0,0,\cdots,0,0,\cdots,0 \\
\vdots \\
0,0,\cdots,-1,1,0,\cdots,0,0,\cdots,0,0,\cdots,0,0,\cdots,0 \\
1,-1,0,\cdots,0,0,\cdots,0,0,\cdots,0,0,\cdots,0,0,\cdots 0 \\
0,1,-1,0,\cdots,0,0,\cdots,0,0,\cdots,0,0,\cdots,0,0,\cdots,0 \\
\vdots \\
0,0,\cdots,1,-1,0,\cdots,0,0,\cdots,0,0,\cdots 0,0,\cdots,0 \\
0,\cdots,0,1,0,\cdots,0,0,\cdots,0,0,\cdots,0,0,\cdots,0 \\
0,\cdots,0,0,1,0,\cdots,0,0,\cdots,0,0,\cdots,0,0,\cdots,0 \\
\vdots \\
0,\cdots,0,0,\cdots,0,1,0,\cdots,0,0,\cdots,0,0,\cdots,0 \\
0,\cdots,0,-1,0,\cdots,0,0,\cdots,0,0,\cdots,0,0,\cdots,0 \\
0,\cdots,0,0,-1,0,\cdots,0,0,\cdots,0,0,\cdots,0,0,\cdots,0 \\
\vdots \\
0,\cdots,0,0,\cdots,0,-1,0,\cdots,0,0,\cdots,0,0,\cdots,0 \\
0,\cdots,0,0,\cdots,0,0,\cdots,0,-1,\cdots,-1,0,\cdots,0 \\
0,\cdots,0,0,\cdots,0,0,\cdots,0,-1,\cdots,-1,0,\cdots,0 \\
\vdots \\
0,\cdots,0,0,\cdots,0,0,\cdots,0,-1,\cdots,-1,0,\cdots,0 \\
0,\cdots,0,0,\cdots,0,0,\cdots,0,0,\cdots,0,-1,\cdots,-1 \\
0,\cdots,0,0,\cdots,0,0,\cdots,0,0,\cdots,0,-1,\cdots,-1 \\
\vdots \\
0,\cdots,0,0,\cdots,0,0,\cdots,0,0,\cdots,0,-1,\cdots,-1
\end{bmatrix}_{\mathrm{m*n}}
$$

$$
A_{eq} = \begin{bmatrix}
1,0,\cdots,1,0,\cdots,1,0,\cdots,0,0,\cdots,0,0,\cdots,0,0,\cdots,0,0,\cdots,0 \\
\vdots \\
0,\cdots,0,1,0,\cdots,0,1,\cdots,0,0,\cdots,0,0,\cdots,0,0,\cdots,0,0,\cdots,0
\end{bmatrix}_{t*n}
$$

APPENDIX B

DISTRIBUTION POWER FLOW ALGORITHM

Nowadays the supply of electrical energy is taken for granted, and most of the human activities are based on electrical energy. Electrical energy is provided by power system which consists of generation, transmission, and distribution systems. One of the most important and fundamental calculations of a system is the steady state behavior, which represents the system's behavior when there is no disturbance in the system. In power system, the study of steady state behavior is called power flow or load flow studies. In this dissertation the focus is on load flow problem of distribution systems.

A distribution system, generally originates at a substation and it has radial topology, which means there is only a unique way from any bus to the substation. Moreover, the R/X (Resistance/ Reactance) ratio of distribution systems is higher than transmission lines. Because of these problems, the fast decoupled Newton method used widely for power flow studies of transmission system is not suitable for many distribution systems.

There are various algorithms for power flow studies in distribution systems which are efficient, i.e. they can efficiently do power flow studies in distribution systems and the problems mentioned before will not brought any problems. All of these algorithms can be classified into three groups:

1. Fast decoupled methods
2. Forward-Backward sweep methods
3. Network reduction methods

The focused algorithm which is used in this dissertation is Forward-Backward sweep for power flow in distribution systems (FBS-PAD).

As discussed before, the general structure of distribution systems is radial, and the forward-backward sweep class of algorithms exploits this feature. Cardinal algorithm of these methods is updating voltages and currents of all buses in a distribution system.

In this chapter, a fairly general variation of forward-backward sweep method will be presented in detail. Several methods based on forward-backward sweep, are presented by others [12; 13; 14; 15], but these approaches are not complete; none of them can model and handle Ungrounded primary- Grounded secondary, and Grounded primary- Ungrounded secondary transformers, and some of them [12; 15] are not capable of handling two or three phase distribution systems. Before discussing the algorithm in detail some useful notations and information which helps understanding the solution algorithm better, must be represented.

B.1. Mathematical Notations

Because of dealing with three-phase unbalanced power flow in this dissertation, Voltages, currents, power flows, and admittance matrices, are represented by vectors. In order to represent the formulas more clearly and compact some notations are made. These notations are shown in Table B.1.

Table B.1 Mathematical Notations

The expression	**Meaning**
$\mathbf{X} .* \mathbf{Y}$	Element wise multiplications
$\mathbf{X} ./\mathbf{Y}$	Element wise division
$\mathbf{X}^*$	Element wise complex conjugate
$\lvert\mathbf{x}\rvert$	Element wise magnitude
$\lvert\mathbf{x}\rvert^2$	Element wise squared magnitude
$\mathbf{x} = \mathbf{A} \backslash \mathbf{y}$	Solution to Ax = y
$\mathbf{X} = \mathbf{A} \backslash \mathbf{Y}$	Solution to AX = Y
$\tilde{\mathbf{x}}$	Computed value
$\bar{\mathbf{x}}$	Constant parameter
$\mathbf{f} \bullet \mathbf{g}(\mathbf{x})$	f(g(x))

x, and y are used to show complex vectors, and A, X, and Y are used to present complex matrices.

B.2. Lateral and Bus Indexing Method

In power flow studies, it is needed to have an appropriate bus ordering algorithm to organize the equations and unknowns related to the buses of the network. In a distribution network, because of its radial structure, it is possible to reduce the number of equations and variables in a way that each set of equations and unknowns corresponds to an entire of a lateral instead of each bus of that lateral. Therefore, having an appropriate lateral indexing is necessary.

Generally a radial structure system comprises of a main feeder with some laterals which themselves may have sub-laterals. In the proposed indexing scheme, first it is needed to determine the level of each lateral in the system. Level of lateral 'i' is the number of laterals which needed to pass through to go from lateral 'i' to the source. For instance, the main feeder is a lateral of first level, and its sub-laterals are of second level, and so on.

The second step is indexing laterals with in the same level, according to the order seen during passing the lateral of previous level from its first bus to the end bus of it called breadth first (BF) method. It is possible to identify each lateral uniquely by using an order pair of (i, m), where 'i' refers to lateral's level and 'm' refers to lateral's index among the 'i^{th}' level laterals.

Scope of the third step is to index buses with in each lateral. Each bus in a lateral is identified by an order of three numbers (i, m, n), where 'n' refers to the number of the bus in the 'm^{th}' lateral of 'i^{th}' level. Indexing the buses of a lateral starts with indexing the first bus and ends by indexing the end bus of each lateral. For instance, (2, 3, 6) refers to the 6th bus of 3rd lateral of 2nd level. Fig. 3.1 shows an example for this indexing scheme.

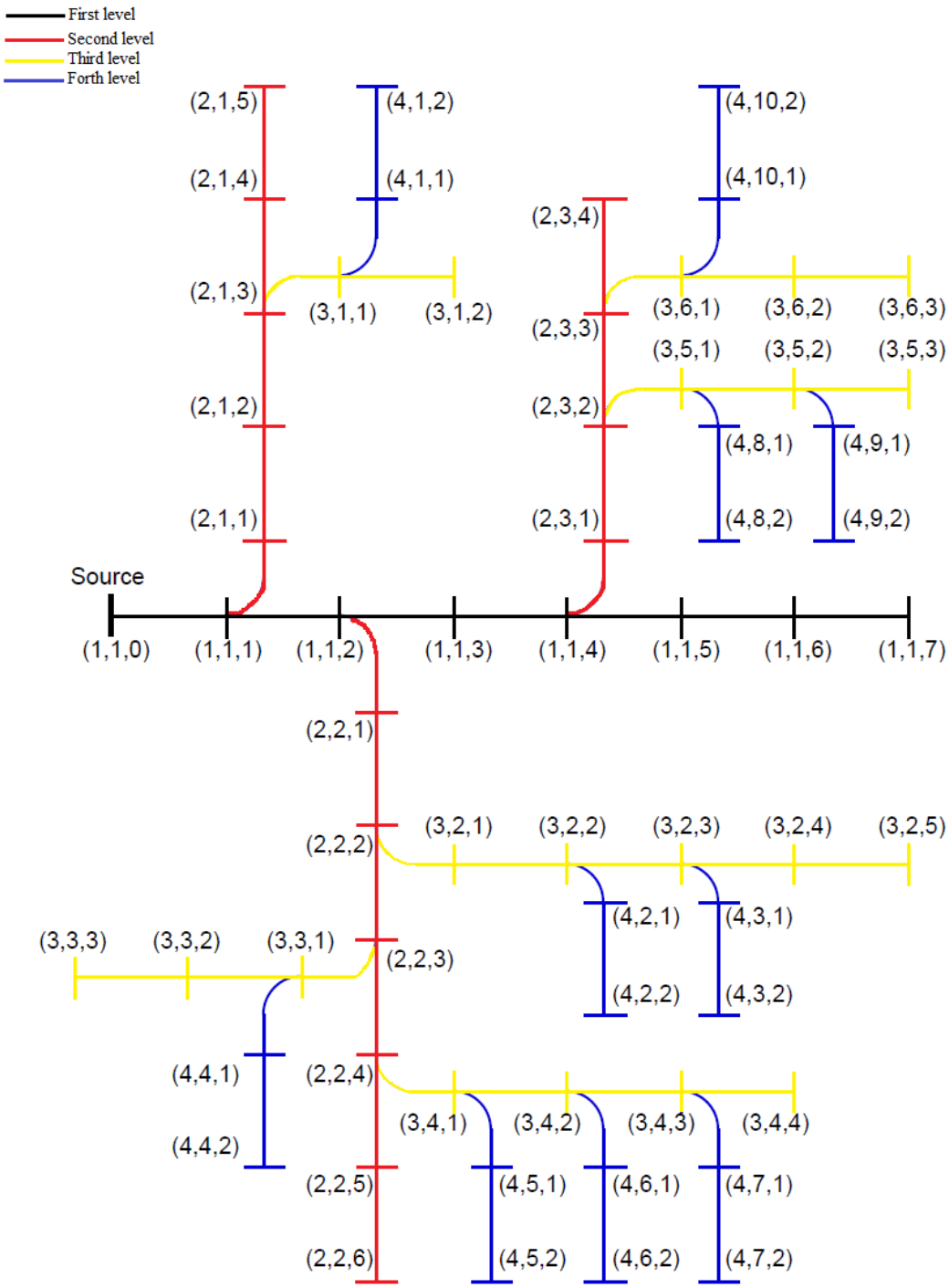

Figure B.1 Bus and Lateral indexing

B.3. Solution Algorithm in Detail

The general algorithm of forward-backward sweep is shown in Table B.2. Forward-backward sweep, consists of two basic steps which are repeated until the convergence rate is achieved. In this method, the backward sweep is a power flow or current summation, with updating the voltage of buses, and forward sweep is a voltage drop calculation with updating the current or power flow of each bus. The backward sweep calculates the currents or power flows injected to the beginning of each lateral by using the boundary condition of zero current or power flow out of the end of the each lateral. By using the calculated currents or power flows, and specified source voltage as a boundary condition, forward sweep computes the end voltages. Table B.3 presents details on forward-backward sweep algorithm

Table B.2 Forward-Backward sweep

FBS-PAD General Algorithm	
Initialize all bus voltages	
1	Backward sweep: Computing sum of currents and possibly update voltage.
2	Forward sweep: Computing voltage drop and possibly update currents.
Repeat until achieving convergence.	

Table B.3 Forward-Backward Sweep in Detail

	Backward sweep	**Forward sweep**
Update	Currents injected to each lateral	End voltages
As a function of	End voltage	Currents injected to each lateral
By	Current summation	Voltage drop computation
Boundary condition	Zero current out of end of lateral	Specified source voltage

The method presented here (VI-VI-PAD), is based on current and it updates both voltage and current in each step of both forward and backward sweeps. Fig. B.2 shows a single feeder distribution example system with both voltage and current boundary conditions. This feeder can be the main feeder or the 'mth' lateral of a distribution system, where the first bus is not the bus connected to the substation directly.

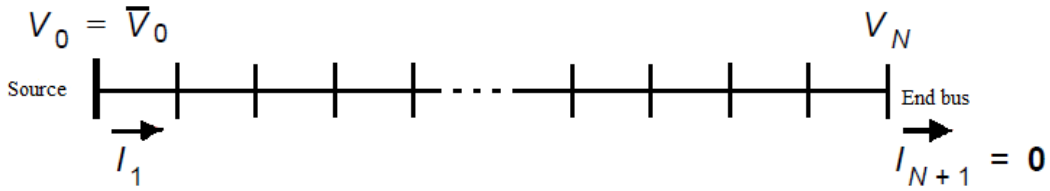

Figure B.0.1 Single Feeder Distribution System

B.3.1. Backward sweep

This method initializes the bus voltages at first, and then the backward sweep is performed. The backward sweep processes laterals in Reverse breadth first (RBF) order, and in each lateral it begins with the last bus and moves toward the first bus of that lateral, updating the current and voltage of each bus. At each bus 'k' current updating equation (B.1) is applied to calculate the current and voltage of previous bus.

$$W_{k-1} = g_k(W_k) \tag{B.1}$$

Implementation of current and voltage updating formula in backward sweep is consists of four steps, which are shown in Table B.4.

Table B.4 Implementation of (B.1)

	Procedure
1	Using V_k , calculate I_{Lk}, I_{Gk}, and I_{Ck}
2	Applying KCL at bus k, calculate I'_k
3	Using V_k and I'_k, calculate V_{k-1}
4	Using V_k, I'_k, and V_{k-1}, calculate I_k

The currents $\tilde{I}_{Ck}$, $\tilde{I}_{Lk}$, and $\tilde{I}_{Gk}$, injected by shunt capacitor, load, and the DG, are calculated by the formulas presented in Tables B.5, B.6, and B.7, according to bus voltage V_k, respectively.

Table B.5 Shunt Capacitor Admittance and Current Matrix

Connection Type	$\mathbf{V_k}$	**Admittance matrix** $\tilde{\mathbf{Y}}_{\mathbf{Ck}} =$	**Injected Current** $\tilde{\mathbf{I}}_{\mathbf{Ck}} =$
Grounded wye	$\begin{bmatrix} V_k^a \\ V_k^b \\ V_k^c \end{bmatrix}$	$\begin{bmatrix} y_{ck}^a & 0 & 0 \\ 0 & y_{ck}^b & 0 \\ 0 & 0 & y_{ck}^c \end{bmatrix}$	$-\tilde{\mathbf{Y}}_{Ck}V_k$
Ungrounded delta	$\begin{bmatrix} V_k^{ab} \\ V_k^{bc} \end{bmatrix}$	$\begin{bmatrix} y_{ck}^{ca} + y_{ck}^{ab} & y_{ck}^{ca} \\ -y_{ck}^{ab} & y_{ck}^{bc} \end{bmatrix}$	

Applying KCL at bus k, the current injected by bus k to its incoming branch I_k' is calculated. Application of KCL at bus k is presented by equation (B.2).

$$I_k' = \tilde{I}_{Gk} + \tilde{I}_{ck} + \tilde{I}_{Lk} - \sum_{j \in A_k} I_j - I_{k+1} \tag{B.2}$$

where

I_j = injected current to sub-lateral of lateral branching off from bus k

I_{k+1} = current of outgoing branch from bus k to bus k+1 on the same lateral

Table B.6 Injected Current by Load

Connection Type	$\mathbf{V_k}$	**Load type**	**Injected Current** $\tilde{\mathbf{I}}_{\mathbf{Lk}} =$
Grounded wye	$\begin{bmatrix} V_k^a \\ V_k^b \\ V_k^c \end{bmatrix}$	Constant PQ	$(\bar{S}_{Lk} ./V_k)^*$
		Constant Current	$\bar{I}_{Lk}$
		Constant Impedance	$-\bar{y}_{Lk} .* \ V_k$
Ungrounded delta	$\begin{bmatrix} V_k^{ab} \\ V_k^{bc} \end{bmatrix}$	Constant PQ	$\begin{bmatrix} -\frac{\bar{S}_{Lk}^{ca}}{V_k^{ab} + V_k^{bc}} - \frac{\bar{S}_{Lk}^{ab}}{V_k^{ab}} \\ \frac{\bar{S}_{Lk}^{ab}}{V_k^{ab}} - \frac{\bar{S}_{Lk}^{bc}}{V_k^{bc}} \end{bmatrix}^*$
		Constant Current	$\begin{bmatrix} \bar{I}_{Lk}^{ca} - \bar{I}_{Lk}^{ab} \\ \bar{I}_{Lk}^{ab} - \bar{I}_{Lk}^{bc} \end{bmatrix}$
		Constant Impedance	$-\tilde{y}_{Lk} V_k$

Table B.7 Injected Current and Admittance Matrix of DG

Connection Type	$\mathbf{V_k}$	**Element Admittance** $y_{\mathbf{Gk}} =$	**Admittance Matrix** $\tilde{\mathbf{Y}}_{\mathbf{Ck}} =$	**Injected Current** $\tilde{\mathbf{I}}_{\mathbf{Gk}} =$
Grounded wye	$\begin{bmatrix} V_k^a \\ V_k^b \\ V_k^c \end{bmatrix}$	$-(\bar{S}_{Gk}^* ./\lvert V_k \rvert^2)$	$\begin{bmatrix} y_{Gk}^a & 0 & 0 \\ 0 & y_{Gk}^b & 0 \\ 0 & 0 & y_{Gk}^c \end{bmatrix}$	$(\bar{S}_{Gk} ./V_k)^*$
Ungrounded delta	$\begin{bmatrix} V_k^{ab} \\ V_k^{bc} \end{bmatrix}$		$\begin{bmatrix} y_{Gk}^{ca} + y_{Gk}^{ab} & y_{Gk}^{ca} \\ -y_{Gk}^{ab} & y_{Gk}^{bc} \end{bmatrix}$	$\begin{bmatrix} -\frac{\bar{S}_{Gk}^{ca}}{V_k^{ab} + V_k^{bc}} - \frac{\bar{S}_{Gk}^{ab}}{V_k^{ab}} \\ \frac{\bar{S}_{Gk}^{ab}}{V_k^{ab}} - \frac{\bar{S}_{Gk}^{bc}}{V_k^{bc}} \end{bmatrix}^*$

By following the third and fourth steps, voltage V_{k-1} and I_k at the previous bus are computed using the formulas, given in Tables B.8 through B.13.

Table B.8 Distribution Lines Update Formulas

Sweep Direction	**Based on**	**Updating Formula**
Forward	I_k, V_{k-1}	$\widetilde{V}_k = V_{k-1} + Z_k(\frac{1}{2} Y_k V_{k-1} - I_k)$
		$\tilde{I}'_k = \frac{1}{2} Y_k(\widetilde{V}_k - V_{k-1}) - I_k$
Backward	I'_k, V_k	$\widetilde{V}_{k-1} = V_k + Z_k(\frac{1}{2} Y_k V_k - I'_k)$
		$\tilde{I}_k = \frac{1}{2} Y_k(\widetilde{V}_{k+1} + V_k) - I'_k$

Table B.9 Switches Update Formulas

Sweep Direction	**Based on**	**Updating Formula**
Forward	I_k, V_{k-1}	$\widetilde{V}_k = V_{k-1}$
		$\tilde{I}'_k = -I_k$
Backward	I'_k, V_k	$\widetilde{V}_{k-1} = V_k$
		$\tilde{I}_k = -I'_k$

Table B.10 Transformers Admittance Matrices

Connection Type of Transformer		$\mathbf{Y_k^{PP}}$	$\mathbf{Y_k^{PS}}$
Primary	**Secondary**	$\mathbf{Y_k^{SP}}$	$\mathbf{Y_k^{SS}}$
Grounded wye	Grounded wye	$\frac{y_k}{\alpha_k^2}\begin{bmatrix}1 & 0 & 0\\0 & 1 & 0\\0 & 0 & 1\end{bmatrix}$	$\frac{-y_k}{\alpha_k\beta_k}\begin{bmatrix}1 & 0 & 0\\0 & 1 & 0\\0 & 0 & 1\end{bmatrix}$
		$\frac{-y_k}{\alpha_k\beta_k}\begin{bmatrix}1 & 0 & 0\\0 & 1 & 0\\0 & 0 & 1\end{bmatrix}$	$\frac{y_k}{\beta_k^2}\begin{bmatrix}1 & 0 & 0\\0 & 1 & 0\\0 & 0 & 1\end{bmatrix}$
Grounded wye	Ungrounded wye	$\frac{y_k}{3\alpha_k^2}\begin{bmatrix}2 & -1 & -1\\-1 & 2 & -1\\-1 & -1 & 2\end{bmatrix}$	$\frac{-y_k}{\sqrt{3}\alpha_k\beta_k}\begin{bmatrix}2 & 1\\-1 & 1\\-1 & -2\end{bmatrix}$
		$\frac{-y_k}{\sqrt{3}\alpha_k\beta_k}\begin{bmatrix}2 & -1 & -1\\-1 & 2 & -1\end{bmatrix}$	$\frac{y_k}{\beta_k^2}\begin{bmatrix}2 & 1\\-1 & 1\end{bmatrix}$
Grounded wye	Delta	$\frac{y_k}{\alpha_k^2}\begin{bmatrix}1 & 0 & 0\\0 & 1 & 0\\0 & 0 & 1\end{bmatrix}$	$\frac{-y_k}{\alpha_k\beta_k}\begin{bmatrix}1 & 0\\0 & 1\\-1 & -1\end{bmatrix}$
		$\frac{-y_k}{\alpha_k\beta_k}\begin{bmatrix}1 & 0 & -1\\-1 & 1 & 0\end{bmatrix}$	$\frac{y_k}{\beta_k^2}\begin{bmatrix}2 & 1\\-1 & 1\end{bmatrix}$
Ungrounded wye	Grounded wye	Opposite of Grounded wye-Ungrounded wye	
Ungrounded wye	Ungrounded wye	$\frac{y_k}{\alpha_k^2}\begin{bmatrix}2 & 1\\-1 & 1\end{bmatrix}$	$\frac{-y_k}{\beta_k\alpha_k}\begin{bmatrix}2 & 1\\-1 & 1\end{bmatrix}$
		$\frac{-y_k}{\beta_k\alpha_k}\begin{bmatrix}2 & 1\\-1 & 1\end{bmatrix}$	$\frac{y_k}{\beta_k^2}\begin{bmatrix}2 & 1\\-1 & 1\end{bmatrix}$
Ungrounded wye	Delta	$\frac{y_k}{\alpha_k^2}\begin{bmatrix}2 & 1\\-1 & 1\end{bmatrix}$	$\frac{-\sqrt{3}y_k}{\beta_k\alpha_k}\begin{bmatrix}1 & 0\\0 & 1\end{bmatrix}$
		$\frac{-\sqrt{3}y_k}{\beta_k\alpha_k}\begin{bmatrix}1 & 1\\-1 & 0\end{bmatrix}$	$\frac{y_k}{\beta_k^2}\begin{bmatrix}2 & 1\\-1 & 1\end{bmatrix}$
Delta	Delta	Like Ungrounded wye- Ungrounded wye	
Delta	Ungrounded wye	Opposite of Ungrounded wye-Delta	
Delta	Grounded wye	Opposite of Grounded wye-Delta	

Table B.11 Update Formulas for Grounded wye-Grounded wye

Sweep Direction	**Based on**	**Updating Formula**
Forward	I_k, V_{k-1}	$\widetilde{V}_k = \left(Y_k^{PS}\right)^{-1}(I_k - Y_k^{PP}V_{k-1})$
		$\tilde{I}'_k = Y_k^{SS}\widetilde{V}_k + Y_k^{SP}V_{k-1}$
Backward	I'_k, V_k	$\widetilde{V}_{k-1} = \left(Y_k^{SP}\right)^{-1}(I'_k - Y_k^{SS}V_k)$
		$\tilde{I}_k = Y_k^{PP}\widetilde{V}_{k-1} + Y_k^{PS}V_k$

Table B.12 Update Formulas for Grounded wye-Ungrounded wye

Sweep Direction	**Based on**	**Updating Formula**
Forward	I_k, V_{k-1}	$\widetilde{V}_k = Y_k^{PS} \backslash (I_k - Y_k^{PP}V_{k-1})$
		$\tilde{I}'_k = Y_k^{SS}\widetilde{V}_k + Y_k^{SP}V_{k-1}$
Backward	I'_k, $\sum V_{k-1}$, V_k	$\widetilde{V}_{k-1} = \left[\frac{Y_k^{SP}}{1 \quad 1 \quad 1}\right]^{-1}\left[\frac{I'_k - Y_k^{SS}V_k}{\sum V_{k-1}}\right]$
		$\tilde{I}_k = Y_k^{PP}\widetilde{V}_{k-1} + Y_k^{PS}V_k$

Table B.13 Update Formulas for Ungrounded wye-Grounded wye

Sweep Direction	**Based on**	**Updating formula**
Forward	V_{k-1}, I_k, $\sum I'_k$	$\widetilde{V}_k = \left[\frac{Y_k^{PS}}{1 \quad 1 \quad 1}\right]^{-1}\left[\frac{I_k - Y_k^{PP}V_{k-1}}{\frac{\beta_k^2}{y_k}\sum I'_k}\right]$
		$\tilde{I}'_k = Y_k^{SS}\widetilde{V}_k + Y_k^{SP}V_{k-1}$
Backward	I'_k, V_k	$\widetilde{V}_{k-1} = Y_k^{SP} \backslash (I'_k - Y_k^{SS}V_k)$
		$\tilde{I}_k = Y_k^{PP}\widetilde{V}_{k-1} + Y_k^{PS}V_k$

Using the formula given in (B.1) backward sweep updates the current injected into the lateral for each lateral of the system. For instance, it updates I_1 as a function of V_N for single feeder example shown in Fig. B.2, by using boundary current and voltage conditions. Procedure of updating currents applying equation (B.1) is shown in (B.3).

$$W_{N-1} = g_N(W_N) = g_N\left(\begin{bmatrix} V_N \\ 0 \end{bmatrix}\right)$$

$$W_{N-2} = g_{N-1}(W_{N-1}) = g_{N-1} \bullet g_N\left(\begin{bmatrix} V_N \\ 0 \end{bmatrix}\right) \qquad \text{(B.3)}$$

$$\vdots$$

$$W_0 = g_1(W_1) = g_1 \bullet \ldots \bullet g_{N-1} \bullet g_N\left(\begin{bmatrix} V_N \\ 0 \end{bmatrix}\right)$$

The lower half of $g_1(W_1)$ represents the I_1 as a function of the end voltage V_N, as shown in equation (B.4).

$$I_1 = \tilde{I}_1(V_n) \qquad \text{(B.4)}$$

The calculated value of the current is stored to use it in KCL calculation at the supplying bus of the lateral, during the current backward sweep. The other half of $g_1(W_1)$ is the voltage part, which is used only for mismatch calculation as shown in (B.5).

$$\tilde{V}_0(V_n) - \overline{V}_0 \qquad \text{(B.5)}$$

The value of (B.5) should be zero at the solution, where $\overline{V}_0$ is specified voltage and $\tilde{V}_0(V_n)$ is the computed voltage.

The currents injected to all of sub-laterals of the lateral should be known, because they are needed in (B.2). In order to have the current injected to all laterals, laterals should be processed in an appropriate procedure; in backward sweep RBF is used as the order of processing the laterals. In RBF processing order, the last lateral 'L' which has no sub-laterals is processed first, then the lateral 'L-1' will be processed and this procedure goes on, until reaching the main feeder. At the end of the backward sweep, all currents and voltages are updated.

B.3.2. Forward sweep

Forward sweep is the second stage in any iteration of the forward/backward sweep method for power flow in distribution systems. Forward sweep starts with the source bus and moves towards the end bus. The processing order used by forward sweep is breadth first (BF) order. Following forward sweep, voltage and current

updating process is performed again, and the corresponding updating formula is given below.

$$W_k = f_k(W_{k-1}) \tag{B.6}$$

Like the updating formula of backward sweep, the formula given in (B.6) is performed in four steps, which are given in Table B.14, in detail.

Table B.14 Implementation of B.6

Procedure	
1	Using V_{k-1}, and I_k, calculate V_k
2	Using V_k, V_{k-1}, and I_k, calculate I'_k
3	Using V_k, calculate I_{Ck}, I_{Lk}, and I_{Gk}
4	Applying KCL at bus k, calculate I_{k+1}

Purpose of the first two steps is to calculate the voltage V_k and current I'_k at the current bus from V_{k-1}, and I_k, where V_{k-1}, and I_k are the voltage and current at the previous bus, respectively. These updates are done by using formulas presented in Tables B.8 through B.13.

In the third step, $\tilde{I}_{Ck}$, $\tilde{I}_{Lk}$, and $\tilde{I}_{Gk}$ injected by shunt capacitor, load, and DG are updated from bus voltage V_k, respectively. The updating formulas are represented in Tables B.5, B.6, and B.7.

Finally applying KCL, I_{k+1} will be updated, where I_{k+1} is the current of out going branch from bus 'k' to the next bus on the same lateral. Applying KCL to the system is shown in (B.7).

$$I_{k+1} = \tilde{I}_{Gk} + \tilde{I}_{Ck} + \tilde{I}_{Lk} - \sum_{j \in A_k} I_j - I'_k \tag{B.7}$$

Where the values of I_j are calculated during the backward sweep.

Unlike backward sweep, forward sweep updates end voltages according to the current injected to the beginning of the lateral. For instance, in the distribution system shown in Fig. B.2 V_N is updated as a function of I_1, using the voltage boundary condition and the value of I_1. The update formula (B.6) is applied to the supplying bus first, and at the end it applied to the end bus. The procedure of applying update formula is shown in (B.8).

$$W_1 = f_N(W_0) = g_N\left(\begin{bmatrix}\overline{V}_0\\ I_1\end{bmatrix}\right)$$

$$W_2 = f_2(W_1) = f_2 \bullet f_1\left(\begin{bmatrix}\overline{V}_0\\ I_1\end{bmatrix}\right) \tag{B.8}$$

$$\vdots$$

$$W_N = f_N(W_{N-1}) = f_N \bullet \ldots \bullet f_2 \bullet f_1\left(\begin{bmatrix}\overline{V}_0\\ I_1\end{bmatrix}\right)$$

The upper half of the W_N, is the desired end voltage as a function of the current injected into the lateral, as shown in (B.9).

$$V_N = \widetilde{V}_N(I_1) \tag{B.9}$$

On the other hand, the lower half of W_N, which is $\tilde{I}_{N+1}(I_1)$, is used for mismatch computation. Once the solution is achieved, mismatch value should be zero.

Since the voltage of supplying bus of each lateral is needed in forward sweep, updating process starts with the main feeder which is the first lateral and it goes through all level 2, 3, …, and 'L' laterals, respectively. By processing level 'L' laterals, the forward sweep is completed and all voltages and currents of the laterals are updated.

B.3.3. Convergence criterion

Each power flow method needs convergence criterion. The forward/backward sweep method has two convergence criterion and both of these indicators should be satisfied in order to terminate the power flow process. Convergence indicators are shown in (B.10), and (B.11).

$$\widetilde{V}_0(V_n) - \overline{V}_0 \tag{B.10}$$

$$\tilde{I}_{N+1}(I_1) = 0 \tag{B.11}$$

More over, it is possible to take the norm of both of indicators to be less than some tolerance.

B.4. Implementation of Method

Implementation of FBS-PAD is straight forward for most part of the distribution network's elements, but it is needed pay special attention in modeling two types of transformers; Grounded primary-Ungrounded secondary, and Ungrounded primary-Grounded secondary. Particularly, some modifications are

needed for step 3 of Table B.4, and step 1 of the Table B.14, in modeling these type of transformers.

B.4.1. Grounded primary-Ungrounded secondary

This type of transformers has three dimensional voltages and currents on the primary side, and two dimensional voltages and currents on the secondary side.

B.4.1.1. Forward sweep

The first step of forward weep computes the secondary voltages from the primary voltages and currents. The update formula of the first step for this type of transformers is given below.

$$\widetilde{V}_k = Y^{PS} \backslash (I_k - Y_k^{PP} V_{k-1}) \tag{B.12}$$

This formula has a unique solution for V_k only if

$$\sum I_k = 0 \tag{B.13}$$

Where I_k is the current on the primary side, for grounded wye-Ungrounded wye, and for grounded wye-Ungrounded delta connection type there is

$$\sum I_k = \frac{y_k}{\alpha_k^2} \sum V_{k-1} \tag{B.14}$$

Where V_{k-1} is the primary side voltage.

Since most of the times, the computed primary currents in forward sweep are not satisfying the constraint represented in (B.13) and (B.14), I_k should be modified to meet the constraints. The value used in (B.13) should be as close to I_k as it is possible while meeting the constraints.

A good approximation to this closest value can be achieved by subtracting or adding equal values to every element of I_k. In order to find the value it is needed to compute the mismatch between the computed value of I_k and the constraint value. Mismatch computed by equations (B.15) and (B.16).

$$\Delta \sum I_k = \sum I_k \tag{B.15}$$

$$\Delta \sum I_k = \sum I_k - \frac{y_k}{\alpha_k^2} \sum V_{k-1} \tag{B.16}$$

The new value of I_k is calculated by subtracting a third of computed mismatch from each element of I_k. Procedure of calculating the new value of I_k is given below.

$$I_k = I_k - \frac{\Delta \sum I_k}{3} \begin{bmatrix} 1 \\ 1 \\ 1 \end{bmatrix} \tag{B.17}$$

$$\widetilde{V}_k = Y^{PS} \backslash \left[I_k - \frac{\Delta \sum I_k}{3} \begin{bmatrix} 1 \\ 1 \\ 1 \end{bmatrix} - Y_k^{PP} V_{k-1} \right] \tag{B.18}$$

By applying these modifications to I_k, process of forward sweep will continue efficiently.

B.4.1.2. Backward sweep

The primary voltage is being calculated by using the voltage and current of secondary side, in the third step of backward sweep. The relevant update formula for this class of transformers is as follows.

$$\widetilde{V}_{k-1} = \begin{bmatrix} Y^{SP} \\ \hline 1 \quad 1 \quad 1 \end{bmatrix}^{-1} \begin{bmatrix} I_k' - Y_k^{SS} V_k \\ \hline \Delta \sum V_{k-1} \end{bmatrix} \tag{B.19}$$

It is only possible to solve (B.19) for V_{k-1} if some information, such as $\sum V_{k-1}$ of the primary side voltage, is available.

Since $\sum V_{k-1}$ should be available for using in (B.19), FBS-PAD have to provide a good and accurate estimation for this value, which becomes more accurate when the algorithm converges. During the previous forward sweep, estimation for the value of $\sum V_{k-1}$ is computed. In the flat start, $\sum V_{k-1}$ is equal to zero because all voltages are assumed to be balanced and 1 pu.

The backward sweep equation presented in (B.4), is also a function of $\sum V_{k-1}$, for a lateral which contains grounded primary-Ungrounded secondary transformers.

$$I_1 = \tilde{I}_1 \left(\begin{bmatrix} V_N \\ \sum V_{k-1} \end{bmatrix} \right) \tag{B.20}$$

In (B.20) V_N is 2*1 function, and $\sum V_{k-1}$ is a number, so this function is still a 3*1 function.

B.4.2. Ungrounded primary-Grounded secondary

Voltage and current at primary side are two dimensional quantities, While at the secondary side they are three dimensional quantities, in this class of transformers.

B.4.2.1. Forward sweep

For this type of transformers, the first step of forward sweep is like the third step of backward sweep for the grounded primary-ungrounded secondary transformers. Updating formula in forward sweep for these transformers is given below.

$$\widetilde{V}_k = \begin{bmatrix} Y^{PS} \\ \hline 1 \quad 1 \quad 1 \end{bmatrix}^{-1} \begin{bmatrix} I_k - Y_k^{PP} V_{k-1} \\ \hline \frac{\beta_k^2}{y_k} \sum I_k \end{bmatrix} \tag{B.21}$$

Like the backward sweep of grounded primary-ungrounded secondary transformers, additional information is needed for computing V_k in (B.21), and it must come from the previous backward sweep. Because the backward sweep is based on current boundary condition, in this case information on currents is available at the secondary of the transformers of this type.

Sum of the currents at secondary side of transformers $\sum I_k'$ is available from the previous backward sweep. So it is possible to evaluate the V_k by using (B.21). The forward sweep equation for a lateral containing this type of transformers is as follows.

$$V_N = \widetilde{V}_N\left(\begin{bmatrix} I_1 \\ \sum I_k' \end{bmatrix}\right) \tag{B.22}$$

B.4.2.2. Backward sweep

Here, the backward sweep is similar to forward sweep of grounded primary-ungrounded secondary transformers. The update formula of backward sweep is given bellow.

$$\widetilde{V}_{k-1} = Y_k^{SP} \backslash (I_k' - Y_k^{SS} V_k) \tag{B.23}$$

Again there is a constraint which must be satisfied.

$$\sum I_k' = \frac{y_k}{\beta_k^2} \sum V_k \tag{B.24}$$

Since, generally the computed sum of voltages and sum of the currents computed in current backward sweep do not satisfy this constraint, some modifications are necessary to proceed with the backward sweep. Since the backward sweep needs an accurate value for $\sum I'_k$, the only variable for this mean is V_k. In order to do the adjustment, first a mismatch must be computed.

$$\Delta \sum V_k = \sum V_k - \frac{\beta_k^2}{y_k} \sum I'_k \tag{B.25}$$

Then a third of this mismatch value is subtracted from each element of V_k, to calculate the new value of V_k which satisfies the constraint.

$$V_k = V_k - \frac{\Delta \sum V_k}{3} \begin{bmatrix} 1 \\ 1 \\ 1 \end{bmatrix} \tag{B.26}$$

Then the modified update formula can be written in closed form as follows.

$$\tilde{V}_{k-1} = Y_k^{sp} \backslash \left[I'_k - Y_k^{ss} \left[V_k - \left[\frac{\sum V_k - \frac{\beta_k^2}{Y_k} \sum I'_k}{3} \right] \begin{bmatrix} 1 \\ 1 \\ 1 \end{bmatrix} \right] \right] \tag{B.27}$$

This adjustment to V_k, produces primary voltages and currents that are consistent with the secondary side constraint and as the algorithm moves forward, these update currents produce a secondary voltage which is more closely to value which satisfies the constraint.

Appendix C

PV Generators Modeling

Photovoltaic (PV) power plants installation is increased in favorable geographical areas, both in residential (single-phase) and commercial (3-phase) sizes. PV source's characteristic is some how different than other kind of power sources; PV sources are intermittent and it is due to their dependency on ever changing environmental conditions. Because of the ability of producing clean electrical energy which has no emission, PV power generation has a remarkable importance in renewable energy marketplace. The small and big size PV system feasibility is the main advantage of this technology. Small size PV systems can be owned and operated by residential and commercial consumers, so system planners and operators have the responsibility of managing these networks, while their knowledge of hourly demand is reduced, and also it is possible to build a PV power plant with high power producing capacity which can be considered as conventional power plants. Compared to other types of DGs, small size PV system is low voltage, low power, and small, there for it is appropriate to interface the system with low voltage distribution systems. By increasing the number of these intermittent sources, the impact of them on the distribution system will be significant. In this project it is necessary to assure that the distribution line's capacity is not violated. In order to assure there is not any line's capacity violation power flow studies on distribution systems are needed, so there should be a model for PVs.

In this chapter a model is developed for PVs. For this reason first a mathematical model is investigated for PVs which is able to produce output power of PVs, and then this output is integrated to distribution power flow solver using either PQ or PV generator model. This model should be able to integrate with unbalanced distribution systems power flow solver.

PV generator comprises of two parts, PV cells, and Power Conditioning Unit (PCU). PCU itself comprises of two parts, Maximum Power Point Tracker (MPPT), and DC/AC inverter. Solar cells connected together in series and parallel to form a PV panel and panels are connected in series and parallel to form a PV array. PV arrays produce DC power which should be adjusted by MPPT for grid tie systems and

converted to AC by DC/AC inverter. As a result, in order to model PV generators, both parts of PV generators and combine them together. Fig. 2.1 shows a typical PV generator.

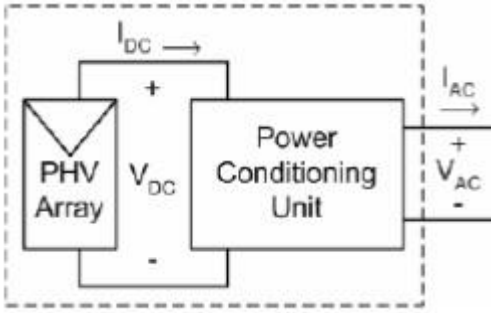

Figure C.1 Typical Scheme of a PV Generator

C.1. Photovoltaic Array Modeling

In this section the Photovoltaic array will be described and modeled in detail by making some assumptions.

C.1.1. Solar cell

Photovoltaic cells are fundamental components of a PV generator. The PV cell is like a semiconductor device which can be modeled as a current source when a flux of solar radiation is incident on it. An electrical field always exists at junctions or inhomogenities in solar cells, which can be described as a silicon semiconductor junction. When it is subjected to solar radiation, absorbs energy and this energy separates the positive and negative charges in the presence of the electric field. In a PV cell, p-n junction exists over a large surface. When there is no illumination or a forward voltage is not applied to a PV cell, it shows the behavior of a p-n junction, just like a common diode. The diode is modeled by Shockley equation which is given in appendix “A”.

The current in a PV cell resulted by solar radiation is called I_l (photo current). The photo current has some characteristics which are mentioned bellow.

1. It follows in the opposite direction of the dark current.

2. Its magnitude is independent of external voltage.

3. It depends on intensity of solar radiation, and it changes linearly with the solar radiation.

C.1.2. PV Module

PV modules is composed of a series and parallel connection of PV cells, with additional components of blocking and bypass diodes. PV cell's current and voltage are small, so the manufacturers connect them in series to increase voltage handling capability, and in parallel to increase current handling capability of a PV module. For instance, shell SQ 175-pc module, has 72 cells and the voltage of each cell is .6 V and open circuit voltage of the module is 44.6 V [24].

There are some assumptions made in modeling the PV modules:

1. Series connection of PV cells will increase voltage handling capability, and parallel connection of PV cells will increase current handling capability of PV modules linearly.

2. Each cell behaves in a uniform manner, means under an environmental condition, the electrical characteristic of each cell in a PV module will be the same.

3. Blocking and bypass diodes are considered as ideal diodes.

For the first assumption to be satisfied each PV cell should behave in a uniform manner. In practice it is not possible because of some problems like surface of some of the PV cells can be covered by dust or other substances, so they are unable to absorb energy as the other cells do. There for some additional components are needed, which are bypass and blocking diodes.

C.1.2.1. Bypass Diode

These diodes are placed across each PV cell in reverse biased to ensure that each series string of PV cells make maximum voltage. Placement of bypass diodes across each PV cells is shown in Fig. C.2.

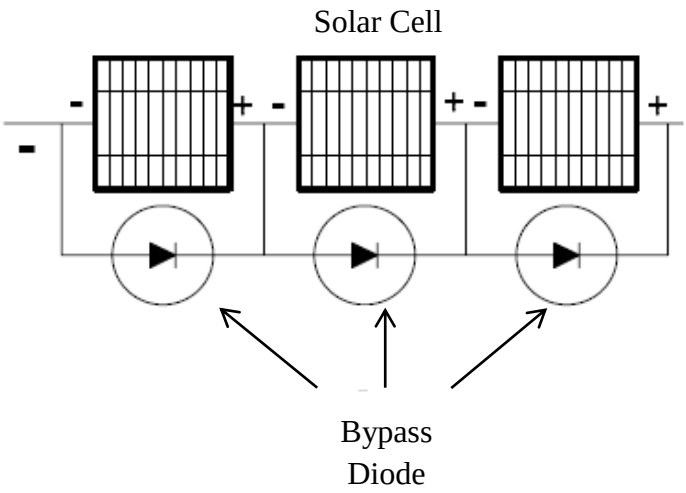

Figure C.2 Placement of Bypass Diodes

In a given string of PV cells, it is possible that one cell covered in dirt, thus it can not absorb sufficient radiation and it is possible for the voltage gain of this cell to reverse, there for the overall voltage gain will be reduced significantly, but by using bypass diodes these cells will short circuited, hence the overall voltage gain will not reduce so much [4]. This phenomenon is shown in Fig. C.3.

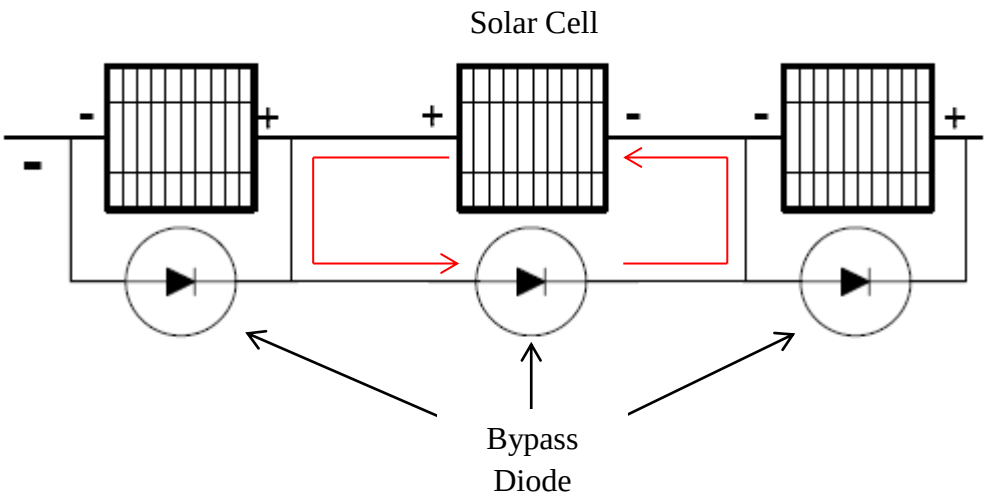

Figure C.3 Bypass Diode Function in a String

C.1.2.2. Blocking Diode

Some times it is possible that a PV cell string in a module absorbs power from the system. In order to prevent absorbing power, blocking diodes are placed between each string of module and PCU. Fig. C.4 shows the placement of blocking diode

.

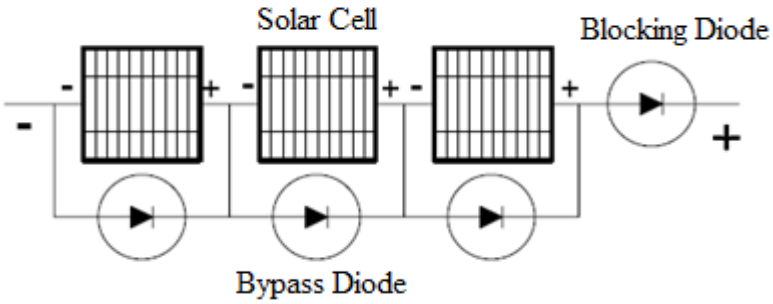

Figure C.4 Placement of Blocking Diode

When a string is not illuminated, it is going to absorb power from the system, but in this condition blocking diode is revers biased and it will not let the current flows toward the string [4]. In some PV generators, the switches of PCU can perform blocking diode's function, but in this condition the string can absorb power from other strings of module. As a result, the overall output power of the module will reduced, there for a blocking diode should be placed for each string to isolate them from other strings; these diodes are called isolating diodes. Fig. C.5 shows the placement of isolating diodes and blocking diodes.

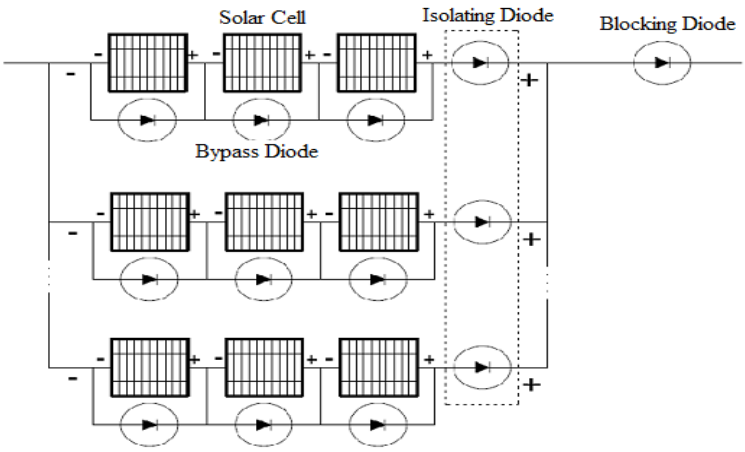

Figure C.5 Placement of Bypass diodes, Isolating Diodes, and Blocking Diode in a PV Module

C.1.3. PV Array

PV modules connect together in series and parallel to create a PV array. Number of series and parallel modules, is dependent on the desired voltage and output power of the array. PV arrays are connected to power system through DC/AC inverter which needs a specific DC input voltage in order to interface with power systems successfully. So the voltage of a PV array is determined by the inverter used in PCU. In order to meet the voltage criteria of a PV array, correct number of PV modules should connect in series. Once the voltage criterion is met, additional modules connect in parallel to increase current handling capability of PV array.

C.2. Power Conditioning Unit (PCU)

PV arrays interface with power system thorough a PCU. A PCU consists of a Maximum Power Point Tracker (MPPT) and a DC/AC inverter. Typical scheme of a PCU is shown in Fig. C.6.

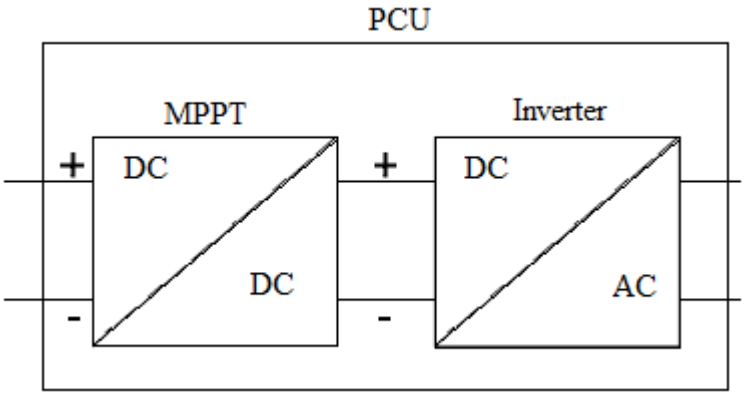

Figure C.6 Typical Scheme of Power Conditioning Unit

When there is a fault in system utility, PV array should be disconnected from the system. For this purpose PCUs contain a protection device or they perform this function by controllable switches of inverter.

2.2.1. Maximum Power Point Tracker (MPPT)

A PV array is able to produce a constant current for a range of voltage below a given threshold, and this threshold voltage and produced current altered by the variation in the environmental conditions. Maximum power produced by a PV array occurs just below this threshold voltage. The MPPT is a DC/DC converter that ensures the input to DC/AC inverter remains constant at an optimal operation value. Different DC/DC converters such as boost, buck, buck-boost, and Cúk, can be used as MPPT in PCU. Typical I-V characteristics of a PV module are shown in Fig. C.7 and Fig. C.8 [8].

.

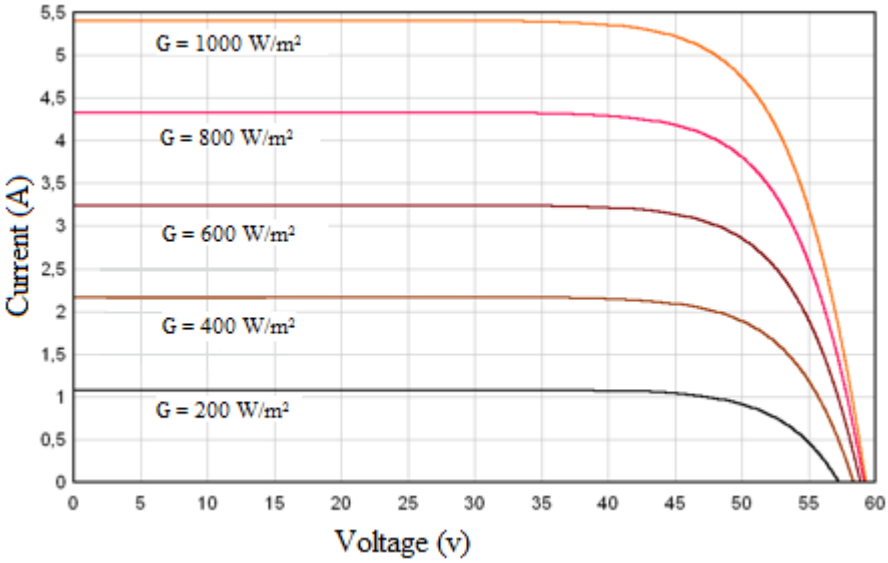

Figure C.7 I-V Characteristics of a PV Module under Varied Solar Irradiance

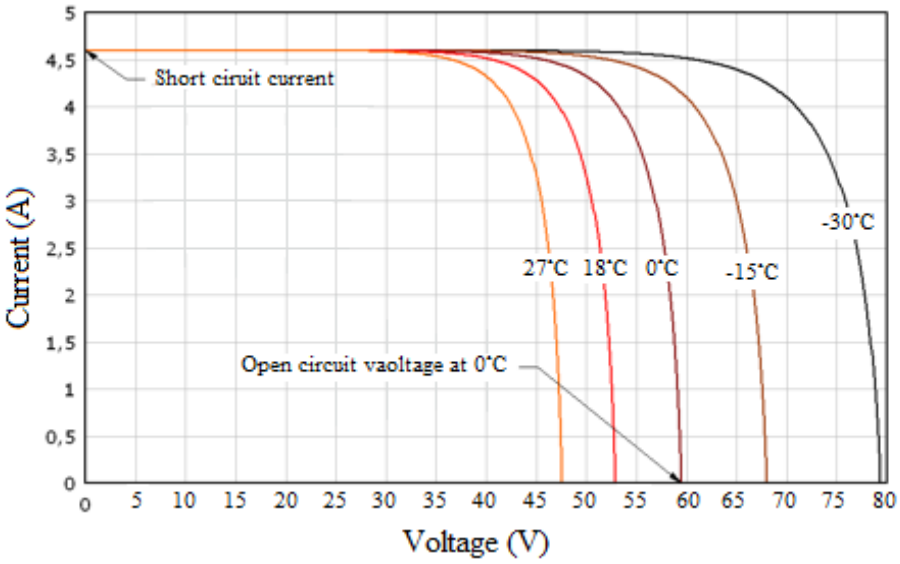

Figure C.8 I-V Characteristic of a PV Module under Varied Ambient Temperature

C.2.2. DC/AC Inverter

While the utility grid is based on AC voltage and current, PV arrays produce DC voltage and current, a DC/AC inverter is needed to invert DC voltage and current to AC. Most PCUs use self-commutated voltage source inverters. Self-commutated voltage source inverters, are built using IGBT or MOSFET switches. These switch devices provide the ability of controlling both ON and off switching events. Moreover, using self-commutated inverters enables PCU to perform the protection devices function for PV generator. In addition, by using self-commutated inverters, it is possible to apply two separate control schemes; current control and voltage control. Control method is determined by the function and size of the PV generator. The ability of providing very high power factor with simple control circuit, made the current control scheme the most common control scheme for PVs, which are grid tied [9]. High power factor of current control scheme is the result of a little tolerance between the phase angles of output current and the system voltage. In this control scheme the voltage wave form of the system is reference value. Current control scheme is appropriate for PV generators that do not have the responsibility for maintaining bus voltage magnitude. Fig. C.9 shows configuration example of control circuit of the voltage type current control scheme inverter.

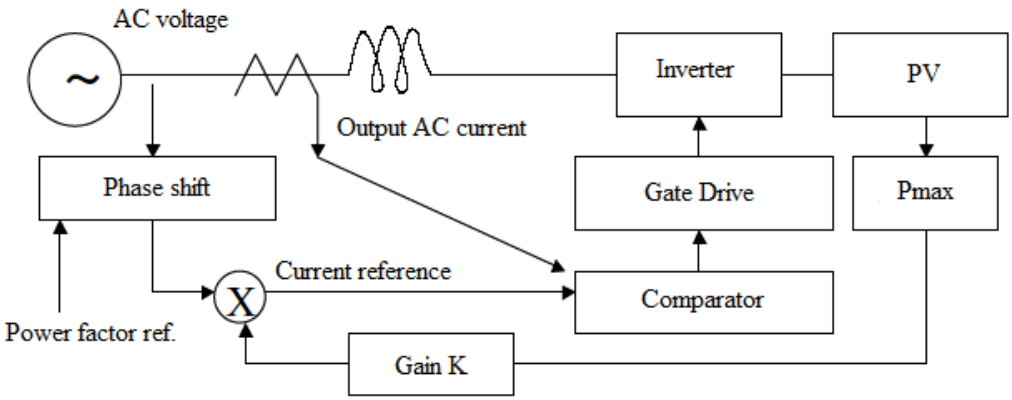

Figure C.9 Example of Control Circuit of the Voltage Type Current Control Scheme Inverter

In some grid tied applications, maintaining the bus voltage magnitude is one of the PV generators responsibilities. Moreover, in off-grid applications the PV generator is responsible for maintaining AC voltage's magnitude. In such applications voltage control scheme is the best choice for inverter control scheme. The principle of voltage control scheme is tacking the grid voltage as the reference and matching the output voltage of PV generator to reference value within some certain tolerance. PWM method, which makes output wave form with less low-order harmonic components, is used to carrying control scheme out [9]. Not only in off-grid cases, PV generators are the only power source and they are responsible for bus voltage magnitude, but in large commercial and industrial grid tied, PV generators

are responsible for bus voltage also, and in both cases the only control scheme that is proper, is voltage control scheme. Because of the intermittent nature of PV generators, output power of them varies so much during a day and these changes in power will affect the bus voltage. This effect of PV generators depends on the size of PV generator. If the PV generator's size is so much big it can impose undesired swings in output voltage. In order to avoid these voltage swings, voltage control scheme applied in PCUs. Using voltage controlled inverters; AC voltage magnitude will remain at a desired value regardless of the size of PV generator.

PV generator's model is determined by its inverter control scheme. Applying current control scheme, PV generator's behavior is like a PQ source, while applying voltage control scheme models the generator as a PV source.

C.3. Calculation of AC Output Power

To this point, some basic information about PV generators and the operation principles of them are discussed. To make load flow studies, the AC power output and output voltage of generators are required. In order to calculate AC output power and voltage, calculating DC power and voltage of PV array is needed.

Here a model will be developed to calculate P_G^{DC} of a PV generator as a function of environmental conditions and ratings of PV array. There are some inputs to model that are used in this model.

1. Array power rating P_{rA} (W)

2. Module open circuit voltage V_{oc} (V)

3. Module short circuit current I_{sc} (A)

4. Maximum voltage and current of module V_{mM}, I_{mM} (V, A)

5. Module rated power P_{rM} (w)

6. Nominal Operating Cell Temperature (NOCT) (℃)

7. Number of series cells in a module N_{cs}

8. Ambient Temperature T_A (℃)

9. Solar irradiance G (W/m^2)

10. Temperature coefficients $\left[\frac{\partial I_{scM}}{\partial T_c}\right]$, $\left[\frac{\partial V_{ocM}}{\partial T_c}\right]$

Rated output DC power determines the size and connection scheme of PV array, module information are available on typical data sheets, solar irradiance determines solar current, and temperature heavily impacts the voltage handling capability of PVs. A typical I-V curve with common data points provided on data sheets is shown in Fig. C.10.

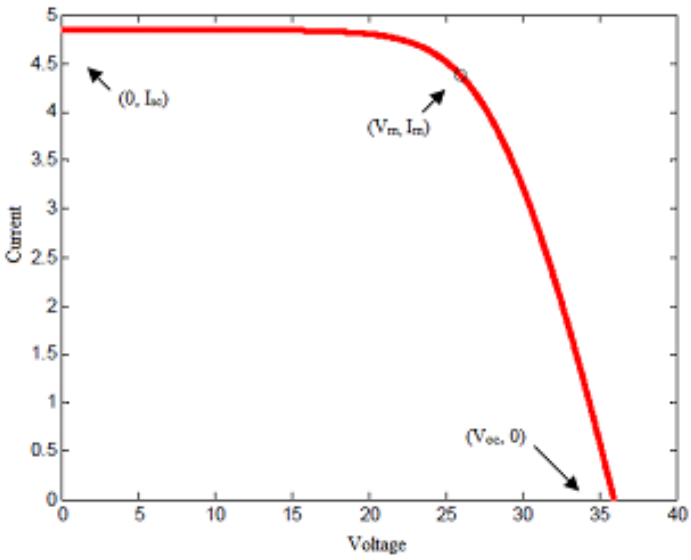

Figure C.10 I-V Curve Showing Three Given Points on Typical Data Sheet

In practice it is needed to use non-ideal circuit model of a PV cell, in order to develop a mathematical model which calculates the P_G^{DC} by using these inputs. In order to model the behavior of a PV cell accurately, R_s and R_{sh} are added to ideal model. Semiconductor material's resistance, internal wiring, collector bus, and the metal grid used to collect current from PV cell, are combined together in order to make a lumped resistor which is R_s. R_{sh} models the shunt losses of emitter layer of PV cell and perimeter shunts at the cell borders. Fig. C.11 shows circuit model of a non-ideal PV cell.

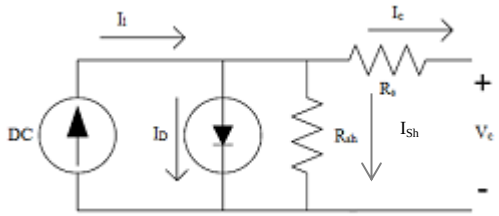

Figure C.11 Non-Ideal Circuit Model of a PV Cell

In practice because of avoiding I_{sh} shown in Fig. C.12, shunt resistances are made so much big.

In a PV array there are some series and parallel connected modules. For simplicity, an assumption is made that the module is composed of only series connected PV cells, and each string is composed of only series connected PV modules. Fig. C.13 shows a circuit model of an array.

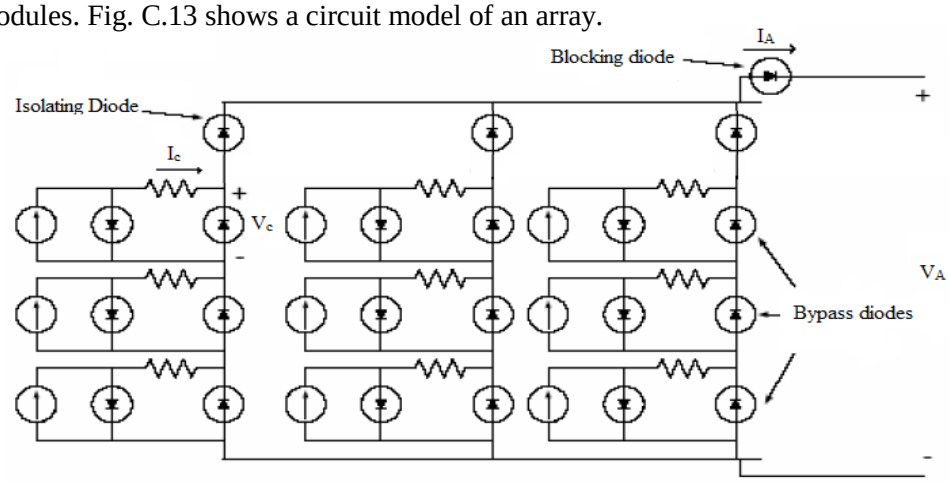

Figure C.12 Circuit Diagram of a PV Array

where by assuming ideal bypass, isolating, and blocking diodes:

I_A = array current (A)

V_A = array voltage (V)

By assuming that each module made up of only series PV cells, describing a PV array is done easily by N_s*N_p, which respectively are number of PV cells in a string and number of strings connected in parallel in an array. Knowing that voltage and current increase in series and parallel connection I_A, I_{scA}, V_A, and V_{ocA} will be described by set of equations (C.1).

$$I_A = N_p * I_c$$

$$I_{scA} = N_p * I_{sc} \qquad (C.1)$$

$$V_A = N_s * V_c$$

$$V_{ocA} = N_s * V_{oc}$$

where:

N_s = number of cells connected in series

N_p = number of strings connected in parallel

I_{scA} = short circuit of the array (A)

V_{ocA} = open circuit voltage of the array (V)

So by taking these assumptions in to account it is possible to compute I-V characteristic of photovoltaic array directly.

In order to calculate P_G^{DC}, it is needed to determine the connection scheme of modules in the array, determine parameters of the array characteristic equation, and calculate I-V curve of the characteristic equation and determine P_G^{DC}.

C.3.1. Connection Scheme of Modules of Array

In order to calculate P_G^{DC}, N_p and N_s are needed and these numbers will be determined by determining desired power rating of the array, and characteristics of a PV module which is provided by manufacturer. Using the following procedure it is possible to determine the N_p and N_s.

$$N_{sM} = RUP\ (V_{DC} / V_{mM})$$

$$P_{col} = P_{rM} * N_{sM} \qquad (C.2)$$

$$N_{pM} = RUP\ (P_{rA}/P_{col})$$

$$\text{Actual } P_{rA} = N_{sM} * N_{pM} * P_{rM}$$

where:

RUP () = function that round to next highest integer number.

V_{mM} = maximum power point voltage of a module

N_{sM} = number of series modules in a string.

P_{col} = Power rating of a single string of N_{sM} modules.

N_{pM} = number of parallel strings in an array.

In this procedure, first number of series modules needed to obtain desired output DC voltage is determined. Second the rated power of a string (P_{col}) of N_{sM} series connected modules is determined. At third step, by using P_{col}, number of parallel strings needed to obtain rated power of the array is determined, and at forth step actual output power of array is calculated. The power obtained from this procedure will be integrated to power flow.

C.3.2. Convert and Scale Cell Characteristic Equation to Array Characteristic Equation

After determining connection scheme of modules in an array, PV cell's characteristic equation should be scaled up to describe array characteristic. From last section it is known that

$$N_s = N_{cs} * N_{sM} \tag{C.3}$$

$$N_p = N_{pM} \tag{C.4}$$

Where N_{cs} is the number of series cells of a module. I_{sc}, V_{oc}, and P_{rM} which are provided by manufacturer, are given at the module level. By following the procedure given below,
it is possible to scale up module level data provided by manufacturer.

$$\begin{aligned} I_{scA} &= I_{scM} * N_p \\ V_{ocA} &= V_{ocM} * N_{sM} \\ P_{rA} &= P_{rM} * N_p * N_{sM} \end{aligned} \tag{C.5}$$

Where subscripts "A", and "M" stand for array and module, respectively.

C.3.4. Calculate I-V Curve of the Characteristic Equation and Determining P_G^{DC}

There is no unique solution for photo voltaic array I-V characteristic equation. Hence it is needed to use a known initial condition to find the correct solution, and the (V_{ocAE}, 0) is that initial condition. In order to calculate the correct answer, an iterative method is used here to find the solution. The method is given bellow.

$V_{AE}(1) = V_{ocAE}$
$I_{AE}(1) = 0$
i = 1
while ($V_{AE}(i) > 0$)
i = i + 1
$V_{AE}(i) = V_{AE}(i-1) - ss$ % ss = small step

$$I_A = I_{scAE} - N_p I_0 [e^{\frac{(V_{AE}(i) + R_{sA} * I_{AE}(i-1)) * q}{n * K * T_{ck} * N_s}} - 1] \quad (C.6)$$

$I_{A1} = I_{AE}(i-1)$
While ($abs(I_{A1} - I_A) > \varepsilon$)
$I_{A1} = I_{A1} + (I_A - I_{A1})/10$

$$I_A = I_{scAE} - N_p I_0 [e^{\frac{(V_{AE}(i) + R_{sA} * I_{A1}) * q}{n * K * T_{ck} * N_s}} - 1]$$

End
$I_{AE}(i) = I_A$
End

A power vector is calculated from I-V curve by multiplying V_{AE} and I_{AE}, and the DC output power of the array is defined as the maximum element of the power vector.

$$P_{AE} = I_{AE} * V_{AE} \quad (C.7)$$

$$P_G^{DC} = \max \{P_{AE}\} \quad (C.8)$$

In practice, the output power of a PV array may not be the maximum power that it can produce, but the MPPT will assures that the maximum power is fed into the DC/AC inverter. So this method, models the behavior of the PV array and MPPT together. The power loss in MPPT is taken into account using the efficiency parameter of the PCU as will describe later.

C. 4. Power Conditioning Unit (PCU)

The developed mathematical model's outputs are V_G^{DC}, I_G^{DC}, and P_G^{DC} which are fed to PCU. PCU assures that the PV array is working in its maximum power point and
transforms DC values to AC values which are fed to grid. Moreover, Model of generator (PQ, PV) is determined by the control scheme of inverter in PCU. Finally, developing a model for PCU is the last step of modeling PV generator.

Self-commutated voltage source inverters are widely used in PCUs and the key parameter, which determines the model of PV generator, is the control scheme of inverter. As discussed before, there are two type of control schemes for inverter in PCU; current control scheme and voltage control scheme. By implementing current control scheme the generator is like PQ sources and by implementing voltage control scheme,

PV generator acts as a PV source. In each case the efficiency of PCU is considered constant and the output power of PV system P_G^{DC}, is scaled in according to equation (C.9).

$$P_{G'}^{DC} = \eta * P_G^{DC} \tag{C.9}$$

where η is the efficiency of PCU.

C. 4.1. PQ Source Model

Most residential and commercial consumers, with less than 10 KW PV generators employ inverters which utilize current control scheme. In this control scheme, PCU controls the output current's phase angle to match the phase of voltage reference measured at the bus of inverter. Implementing this control scheme, leads to have high power factor for PV generator [9]. In constant PQ source, the real and reactive power injection P_G^{inj} and Q_G^{inj} can be calculated as follows.

$$\begin{aligned} P_G^{inj} &= PF * P_{G'}^{DC} \\ Q_G^{inj} &= \sin(\arccos(PF)) * P_{G'}^{DC} \\ S &= P_G^{inj} + jQ_G^{inj} \end{aligned} \tag{C.10}$$

C. 4.2. PV Source Model

Large three-phase commercial and industrial sized PV generators with capacity larger than 10 KW, would use voltage-controlled inverter, so the PV generator acts like a voltage source. For given environmental condition, the apparent power capacity of the PV generator S_G^{inj} is determined by PV array model and the desired V.

$$\left|S_G^{inj}\right| \leq P_{G'}^{DC} \tag{C.11}$$

The current capacity of the PV generator is limited by S_G^{inj}. Based on most commercial PCUs a power factor of 0.9 will be selected as the minimum power factor for calculatingP_G^{inj}, andQ_G^{inj}. ThusP_G^{inj}, andQ_G^{inj} are calculated by equations (C.12) and (C.13).

$$P_G^{inj} = .9 * P_{G'}^{DC} \tag{C.12}$$

$$Q_{G,lim}^{inj} = \sin(\arccos(.9)) * P_{G'}^{DC} \tag{C.13}$$

Subject to

$$Q_G^{inj} \leq Q_{G,lim}^{inj} \tag{C.14}$$