MODELING AND SIMULATION OF MICROGRID CONTROL

2017
M. Sc. Thesis
Electrical-Electronics Engineering

HESHAM AHMED S. ALMGARBJ

MODELING AND SIMULATION OF MICROGRID CONTROL

A THESIS SUBMITTED TO
THE GRADUATE SCHOOL OF NATURAL AND APPLIED SCIENCES OF
KARABUK UNIVERSITY

BY

HESHAM AHMED S. ALMGARBJ

IN PARTIAL FULFILLMENT OF THE REQUIREMENTS FOR
THE DEGREE OF MASTER OF SCIENCE IN
DEPARTMENT OF
ELECTRICAL-ELECTRONICS ENGINEERING

May 2017

I certify that in my opinion the thesis submitted by Hesham Ahmed S. ALMGARBJ titled "MODELING AND SIMULATION OF MICROGRID CONTROL" is fully adequate in scope and in quality as a thesis for the degree of Master of Science.

Assoc. Prof. Dr. Ziyodulla YUSUPOV .....
Thesis Advisor, Department of Electrical-Electronics Engineering

This thesis is accepted by the examining committee with a unanimous vote in the Department of Electrical-Electronics Engineering as a master thesis. May 3, 2017

Examining Committee Members (Institutions)	Signature
Chairman: Assist. Prof. Dr. Hüseyin ALTINKAYA (KBU)	.....
Member: Assist. Prof. Dr. Serdar ÖZYURT (AYBU)	.....
Member: Assoc. Prof. Dr. Ziyodulla YUSUPOV (KBU)	.....

23/05/2017

The degree of Master of Science by the thesis submitted is approved by the Administrative Board of the Graduate School of Natural and Applied Sciences, Karabuk University.

Prof. Dr. Nevin AYTEMİZ .....
Head of Graduate School of Natural and Applied Sciences

"I declare that all the information within this thesis has been gathered and presented in accordance with academic regulations and ethical principles and I have according to the requirements of these regulations and principles cited all those which do not originate in this work as well."

Hesham Ahmed S. ALMGARBJ

ABSTRACT

M. Sc. Thesis

MODELING AND SIMULATION OF MICROGRID CONTROL

Hesham Ahmed S. ALMGARBJ

Karabuk University
Graduate School of Natural and Applied Sciences
Department of Electrical-Electronics

Thesis Advisor:
Assoc. Prof. Dr. Ziyodulla YUSUPOV
May 2017, 74 pages

The integrating of renewable energy resources into the power system through industrial electronics and development of information technologies have pushed to emerging a new concept – Smart Grid. Smart Grid is an electrical network that should provide future requirements for security, energy-efficiency and reliability of the power system operation. Microgrid is a basic element and a key component of Smart Grid. During the last decades with rapid penetration of distributed energy resources into the power system, the interest on microgrid has been growing. Microgrid appears with the development of distributed generations and distributed energy resources, such as PV, wind, microturbines, fuel cell, combined heat and power, etc. Microgrids as a key component of Smart Grid are intended to improve energy efficiency, a reliability of power system and decrease carbon dioxide emissions.

In the thesis are considered types and technologies of distributed energy resources which are a new approach in power system, particularly in microgrid. This work presents modeling, simulation and control of the microgrid system operation.

The substation of distribution network of Karabuk University campus is used for case studies. The structure and components of Karabuk University microgrid are considered and discussed in a two mode operation – islanded and grid connected.

Simulation models of Karabuk University microgrid for islanded and grid connected modes are developed on Matlab/Simulink.

Key Words : Distributed generation, distributed energy resources, microgrid, control of microgrid, smart grid.

Science Code : 905.1.173

ÖZET

Yüksek Lisans Tezi

MİKRO ŞEBEKE KONTROLÜNÜN MODELLENMESİ VE SİMÜLASYONU

Hesham Ahmed S. ALMGARBJ

Karabük Üniversitesi
Fen Bilimleri Enstitüsü
Elektrik-Elektronik Anabilim Dalı

Tez Danışmanı:
Doç. Dr. Ziyodulla YUSUPOV
Mayıs 2017, 74 sayfa

Yenilenebilir enerji kaynaklarının endüstriyel elektronik yoluyla güç sistemine entegrasyonu ve bilgi teknolojilerinin geliştirilmesi, yeni bir konsept olan Akıllı Şebeke (Smart Grid)'in ortaya çıkmasına yol açmıştır. Akıllı Şebeke, güvenlik, enerji verimliliği ve güç sistemi işlemlerinin güvenilirliği için gelecekteki ihtiyaçları karşılayan elektrik şebekesidir. Mikro şebeke, akıllı şebekenin temel bir unsuru ve anahtar bir bileşenidir. Son birkaç on yılda, dağıtık enerji kaynaklarının güç sistemleri içinde hızla yayılmasıyla birlikte mikro şebekelere olan ilgi artmaktadır. Bir mikro şebeke, dağıtılan enerji kaynaklarını, depolama aygıtlarını (volanlar, enerji kapasitörleri ve bataryalar) ve esnek yükleri birleştirir ve güç şebekesine şalterler vasıtasıyla bağlanır. Akıllı şebekelerin ana bileşeni olarak mikro şebekeler enerji verimliliğini, güç sisteminin güvenilirliğini ve karbondioksit emisyonlarını azaltmayı amaçlamaktadır.

Bu tezde, güç sistemlerinde, özellikle de mikro şebekelerde yeni bir yaklaşım olan dağıtık enerji kaynaklarının türleri ve teknolojileri değerlendirilmiştir. Bu araştırma çalışmasında, mikro şebeke sisteminin modellenmesi, simülasyonu ve kontrolü ortaya konulmuştur.

Durum çalışmaları için Karabük Üniversitesi kampüsünün dağıtık güç şebekesi kullanılmıştır. Karabük Üniversitesi mikro şebekesinin yapısı ve bileşenleri iki modlu çalışmada (ada ve şebekeye bağlı) incelenmiş ve tartışılmıştır.

Ada ve şebeke bağlantılı modlar için Karabük Üniversitesi mikro şebekesinin simülasyon modelleri Matlab / Simulink üzerinde geliştirilmiştir.

Anahtar Sözcükler : Dağıtık üretim, dağıtık enerji kaynakları, mikro şebeke, mikro şebeke kontrolü, akıllı şebeke.

Bilim Kodu : 905.1.173

ACKNOWLEDGEMENT

I am grateful to the head and all teachers of the Electric-Electronics Engineering Department, Karabuk University who took the time to offer me guidance. My deep gratitude goes to my advisor, Assoc. Prof. Dr. Ziyodulla YUSUPOV, for his close supervision, guidance and constant encouragements throughout an extended period of the study and the work.

I would like to thank my parents, for their encouragement, support, and unwavering love, which makes my dream come true. I appreciate support and patience of my wife and children.

CONTENTS

Page

Page

LIST OF FIGURES

Page

Page

LIST OF TABLES

Page

SYMBOLS AND ABBREVIATIONS INDEX

ABBREVIATIONS

AC : Alternating Current
AFC : Alkaline Fuel Cell
APUs : Auxiliary Power Units
B : Bus
CB : Circuit Breaker
CdTe : Cadmium Telluride
CERTS : Consortium for Electric Reliability Technology Solution
CHP : Combined Heat and Power
DC : Direct Current
DER : Distributed Energy Resource
DFIG : Doubly Fed Induction Generator
DG : Distributed Generation
DMFC : Direct Methanol Fuel Cell
DSSC : Dye Sensitized Solar Cell
EDN : Efficient Distribution Network
EPRI : Electric Power Research Institute
FACTS : Flexible AC Transmission Systems
FC : Fuel Cell
GaAs : Gallium Arsenide
HFAC : High-Frequency AC
HV : High voltage
IG : Induction Generator
KBU : Karabuk University
kW : KiloWatt
kWh : kilowatt-hour
LC : Local Control

LFAC : Line-Frequency AC
LV : Low Voltage
LVDC : Low-Voltage DC
MC : Microgeneration Control
MCFC : Molten Carbonate Fuel Cell
MG : Microgrid
MGCC : Microgrid Central Controller
MT : Micro Turbine
MV : Medium Voltage
MW : MegaWatt
NASA : National Aeronautics and Space Administration
NREL : National Renewable Energy Laboratory
PAFC : Phosphoric Acid Fuel Cell
PCC : Point of Common Coupling
PI : Proportional Integral
PID : Proportional Integral Derivative
PLL : Phase Locked Loop
PMSG : Permanent-Magnet Synchronous Generator
P-Q : Control Strategy (active and reactive power)
PV : Photovoltaic
RES : Renewable Energy Sources
SCIG : Squirrel Cage Induction Generator
SG : Synchronous Generator
SG : Smart Grid
SHP : Small Hydro Power
SOFC : Solid Oxides Fuel Cells
UPLC : Universal Active Power Line Conditioner
UV : Ultraviolet
VSC : Voltage Source Converter
VUF : Voltage Unbalance Factor
WECS : Wind Energy Conversion System
WT : Wind Turbine

CHAPTER 1

INTRODUCTION

Problems of environmental protection, energy security and economic development, referred to as the "three E» (Environment, Energy, Economics), are interlinked global challenges of the modern era. Nowadays, people are realizing that the challenges, which the energy sector is facing, are becoming more serious. Power systems operation is becoming more labor-consuming, which will ultimately require more research for creating energy security, economic improvement and efficiency, thereby creating the preconditions for a new concept of "Smart Grid" (SG).

Microgrid (MG) is a basic element and a key component of smart grid, and MGs are intended to improve energy efficiency, reliability of energy and power generation system and reduce carbon dioxide emissions. Microgrid is an aggregation of loads, through which, micro-sources operate like a stand-alone process generating both electricity and heat. Most of the microsources must be electronically operated to create the required flexibility and to assure operation like a stand-alone and fully integrated system.

A MG is a connection between native distributed power loads and distributed energy sources including the microturbine, wind turbine, photo-voltaic (PV) and storage devices in low-voltage (LV). With numerous microsources connected through the distribution mechanism, some new issues like system stabilization, quality of generated power, and operational network, which have to be dealt with by applying the developed control techniques on LV/MV.

1.1. MOTIVATION OF THE THESIS

High penetration of the distributed energy resources (DER) within the power energy system opened new areas of research such as reliability and efficiency of the smart grid system, storage and interface to other power networks, flexibility of generation, digitalization of the energy systems and the utilization of research results.

However, the high penetration of distributed energy resources to power system there is main problem is how to integrate renewable energy resources and storage units to existing distribution networks. Because conventional distribution systems operate radially without any types of distributed generation at low voltage side.

The high capacity of distributed generators (DGs) make control, protection, and communication of distribution systems more complex, which are fundamentally designed and produced to function in a radial manner, which means without any low-voltage generation in the distribution lines or on the customer side.

An important problem is how to integrate various MGs into the existing distribution networks of power system by systematically synchronizing their generator or storage unit's operation and also by limiting their potentially negative side-effects on network operation and the methods, which are used to control the distributed energy resources (DER) because they are very volatile and difficult-to-predict, so, in that case, the power will fluctuate over time.

MGs have nonlinearities, changing dynamics, and uncertainties in the operation that need the intelligent control strategy to maintenance the stability of the system. Since some renewable energy resources, like the wind turbines or PVs work under volatile environmental conditions, MGs must adapt to these variations and in this way the effectiveness and reliability of MGs strongly depend on the applied control strategies.

Therefore, collaboration of MG and electric grid are much needed factors to provide reliability, security and stable operation of the power system. One the basis of these

factors, we have developed and exhibited modeling and simulation processes of MG and their numerous modes.

1.2. OBJECTIVE OF THE THESIS

The objective of this research is to develop simulation model of microgird for a one substation of Karabuk University (KBU) on Simulink/Matlab and consider MG islanded and grid-connected to main-grid modes.

1.3. LITERATURE REVIEW

The first scientific work related to microgrid was provided by R. H. Lasseter [1] and where the basic architecture, control and protection and energy management of microgrid are described.

The work of T. Ackermann et al [2] introduces distributed generation. It has discussed the concerned issues and defined and explained the distributed power generation. They gave definition to the term "distributed generation”. More so, technical terms including distributed capacity, distributed resources, and distributed utility have been discussed.

R. H. Lasseter et al [3] in their work related to research project "The Consortium for Electric Reliability Technology Solution (CERTS)" discussed the technologies of MGs in details, which became reason behind development of MG. Also, this paper informs readers about technologies used to initiate distributed generation.

Almost all the types of major resources of distributed energy, storage, load control of the equipment and its heat recovery have been discussed by the researchers. The major distinguishing aspect of MicroGrid system is that its power sources are interlinked with controllers. The article of N.Hatziargyriou et al [4] gives information about the ongoing research, development, and it also demonstrates the function of microgrid operation, which is currently used in many developed countries of Europe, Japan, the United States, and Canada. MGs support coordination of DERs

(distributed energy resources) in a highly decentralized way. Therefore, MGs reduce the control pressure, which the grid faces. In this context, authors state that microgrids consist of LV locally-controlled bunch of DERs, which behave on the grid's behalf as a sole producer or both in electric and energy markets. A microgrid functions with safety and efficiency in its own local distribution network; however, it is capable of the function called "islanding."

Basic concept, generation technologies, impacts, operation, control and management aspects, and economic feasibility and market participation issues of MG and active distribution networks have been discussed in the work of S. Chowdhury et al [5]. The authors are called microgrids as active distribution network systems, because with integration distributed energy resources into power systems distributed network becomes active.

The authors H. Jiayi et al. [6] considered the basic concepts of MGs and their active distribution networks, their needs, their technical advantages and challenges, their several management and operational issues. The authors discuss the essential rules of operating numerous DER technologies, which are used in Microgrid, its active distribution networks, and affects the whole idea of Microgrid. Microgrids have huge effect on main grid operations as well as impact on its customers. In this research, we have listed the technical, environmental, and monetary advantages of MG. The security system of Microgrids and development of electronic interface/s for Microgrids, their microsources, their controllers, quality of power, reliability issues of the Microgrid, and distribution networks are discussed in detail. In paper a technical review on important DERs and microgrid has been added.

In the paper of M. Barnes et al [7] an overview on worldwide MG projects is given. The structure of the MG has been briefly described by authors. The hardware range and control options for Microgrid operation are provided after reviewing. The paper evaluates and emphasizes the operating principles and key factors of the research and field trials conducted so far.

The paper written by F. Martin-Martínez et al. [8] gathered literature review associated with MGs. The authors represent basic definitions, structure and architecture of MG. In this article, exhaustive analysis of each MG physical layer has conducted. There are discussion about AC and DC types of MG operation, evaluation of DC voltage and comparison showing different technologies involved within the MG concept in the paper.

D. Olivares et al. describe control strategies of MG [9]. In this paper, major challenges pertaining to the microgrid control system are discussed and description of state-of-the-art control strategies and trends are focused with a general overview of major control principles (e.g., droop control, model predictive control, multi-agent systems) is also included.

A. Zafeer et al. [10] have introduced types of MG. The paper presents techniques and the simulation results. The results obtained out of coordinating energy loads and energy sources within a single mechanism of MG.

CHAPTER 2

DISTRIBUTED ENERGY RESOURCES

2.1. DISTRIBUTED GENERATION

It is observed that the power systems are facing problems including gradual exhaustion of naturally existing fuels, inadequate power competence and besides, they are not environment-friendly, which created need for local power generation through renewable fuels/energy.

Power production system of this type is called DG (distributed generation) system, which produces/generates power through its own DG resources called DERs. The concept of “Distributed Generation” was initially presented to separate this type of power-generation-concept from tradition system. The distribution network gets efficient by using this system and so, experts call it efficient distribution network (EDN) [5].

The Figure 2.1 is distinctly illustrates types and technologies of distributed generation.

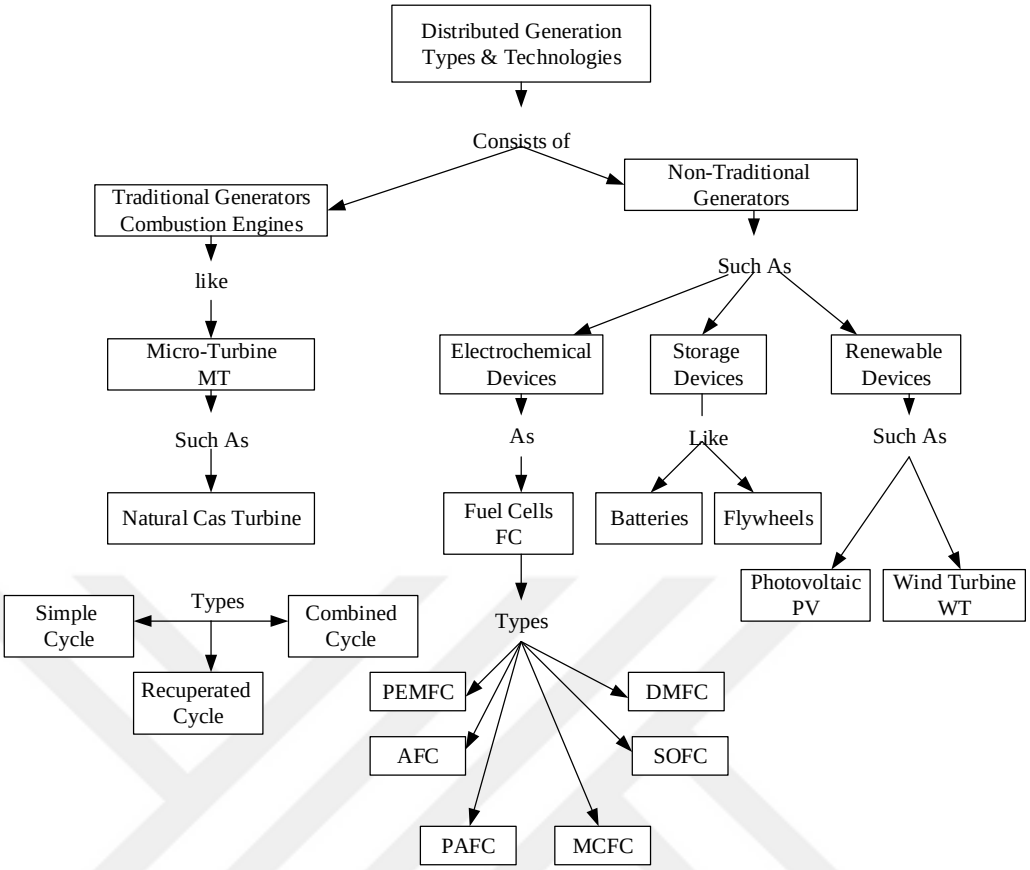

Figure 2.1. Types and technologies of distributed generation [1].

In the Table 2.1 are given typical features of the DG sources, and in the Table 2.2 are presented power characteristics for distributed generation.

Table 2.1. Characteristics of distributed energy sources [11-13].

Characteristics	Solar	Wind	Microhydro	Diesel	CHP
Availability	Geographical location dependent	Geographical location dependent	Geographical location dependent	Any time	Dependent on source
Output power	DC	AC	AC	AC	AC
GHG emission	None	None	None	High	Dependent on source
Control	Uncontrol-lable	Uncontrol-lable	Uncontrol-lable	Controllable	Dependent on source
Typical Interface	Power electronic converter (DC-DC-AC)	Power electronic converter (AC-DC-AC)	Synchronous or induction generator	None	Synchronous generator
Power flow control	MPPT & DC link voltage controls (+P, ±Q)	MPPT, pitch & torque	Controllable (+P, ±Q)	Controllable (+P, ±Q)	AVR and governor (+P, ±Q)

Table 2.2. Power characteristics for distributed generation [11].

Technology	Typical available size per module
Combined cycle gas T.	35–400 MW
Internal combustion engines	5 kW–10 MW
Combustion turbine	1–250 MW
Micro-Turbines	35 kW–1 MW
Renewable Small hydro	1–100 MW
Micro hydro	25 kW–1 MW
Wind turbine	200 Watt–3 MW
Photovoltaic arrays	20 Watt–100 kW
Solar thermal, central receiver	1–10 MW
Solar thermal, Lutz system	10–80 MW
Biomass, e.g. based on	100 kW–20 MW
gasification Fuel cells, phosacid	200 kW–2 MW
Fuel cells, molten carbonate	250 kW–2 MW
Fuel cells, proton exchange	1 kW–250 kW
Fuel cells, solid oxide	250 kW–5 MW
Geothermal	5–100 MW
Ocean energy	100 kW–1 MW
Stirling engine	2–10 Kw
Battery storage	500 kW–5 MW

2.2. SOLAR PHOTOVOLTAIC SYSTEMS

Solar photovoltaic systems are one of mostly developed types of distributed generation in last decades.

Technologies based on solar cell have been categorized as technologies, which are based on wafer and they exist in crystalline solar cells chiefly made up of silicon. They use thin films (Figure 2.2).

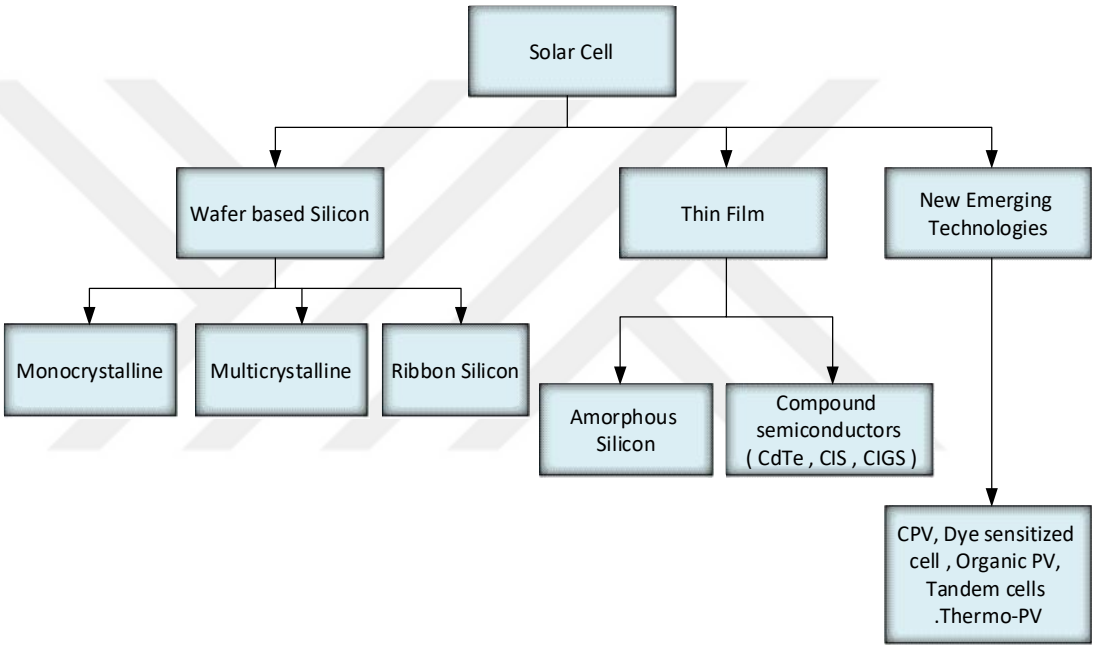

Figure 2.2. Classification of solar cell technologies.

PV devices are still mainly silicon-based and silicon and all its properties have been topics of rigorous researches. It has been proven that silicon-based PV cells offer highly reasonable reliability both in external space and for earthly appliances.

Some substances including cadmium telluride and gallium arsenide have been costlier. The major problem with silicon-based production is its high-cost purification process. Solar cells, which are normally used to run terrestrial applications, are usually manufactured by using silicon in a single-crystalline form, multiple-crystalline form and solidified-amorphous-form.

There are the following advantages of silicon based type of PV:

- Single-crystalline form has been more effective as the crystals are grain boundaries-free that creates problems with its crystalline form creating lattice-variations and it is believed to reduce both thermal and electric conductivities features. This becomes a hurdle for the flow of electrons.
- There is a clear boundary that Poly/multiple-crystal silicon has, so, some parts of individual crystalline-specs are observable without a microscope.
- More so, a-Si (amorphous-type silicon) exists in a non-crystal-form of silicon because its atomic arrangement has comparatively disorganized form. So, jumbled existence of this substance, which atomic structure exhibits as a lose bond, which negatively affects the electron flow.

Amorphous-type of silicon carries minimum power-retention capability among all the other types, but it is the most economical form to manufacture.

New solar photo-voltaic systems, like solar PV cells using organic materials, in addition to some solar cells, which have been sensitized through dyeing are yet in the experiment phase as they are not used for commercial purposes, so they are not produced on large scale. Experts call them "3G Solar-PV" technology and they are called as Dye Sensitized Solar Cells (DSSC)s or dye-sensitized solar-energy cells and they use a combination of photo electrical and chemical properties founded on semiconductors placed to separate the electrolyte and anode in photosensitized form.

Semiconductors in nanocrystal line form perform in DSSCs like antennae to capture sunlight while dye-molecules separate charge (photocurrent) function. This is dynamic system because it works like photosynthesis [14]. They are needed because of they are economical and production-friendly.

These cells discharge electrons through titanium dioxide-wrap existing within the light pigment. But still, their performance reduces with the passage of time when they are exposed to UV rays or when the electrolyte freezes.

Laboratory efficiency of around 15 % has been claimed so far as a consequence of expansion of latest broad-spectrum dyestuffs and electrolytic substances but its mercantile efficiency is less (between 4 to 5%). DSSC's less efficiency is due to lack of absorbent dyes with capability to suck up broad-spectrum range. The research-requiring area is using semiconductors containing nano-crystals, which let DSSCs' cover the broad-spectrum range.

Large number of dyes, which were developed out of organic materials and they are researched so far. Their designs, synthesis, assembly, and nano-structures were analyzed because they are believed to provide superior power-conversion. DSSCs are more efficient and easily available 3G solar-energy-dependent alternative. Organic power conservation cells are constructed out of polymers. They are economical but not viable. Although they are considered as a new niche-technology; however, their future is unclear. Their current usability is due to recent innovations, which helped them gain better performance. The efficiency of organic PVs range between 4 and 5% for commercial systems and in laboratory, they are observed between 6 to 8%.

Moreover, key challenge of using solar cells made out of natural materials is their unstable performance as the time passes. Production of organic cells utilizes speedy and low-heat production system. They also use standardized printing technologies [15].

So, organic solar cells can become as efficient as other PVs. Their cost of production is continuously declining and it might fall to USD 0.50/W by 2020 [16].

So they are effective and viable for building-appliances, which increase possibilities in shapes and forms applied to the PV systems. Another major benefit is that this technology utilizes safe substances, so, their manufacturing is done though highly-scalable system. Every PV panels is a low-voltage cell cluster.

Series of cells is used to create a more useful voltage value. Frontal part has low-iron glass window-like structure with high transmission properties, which protect the PV material surface (Figure 2.3).

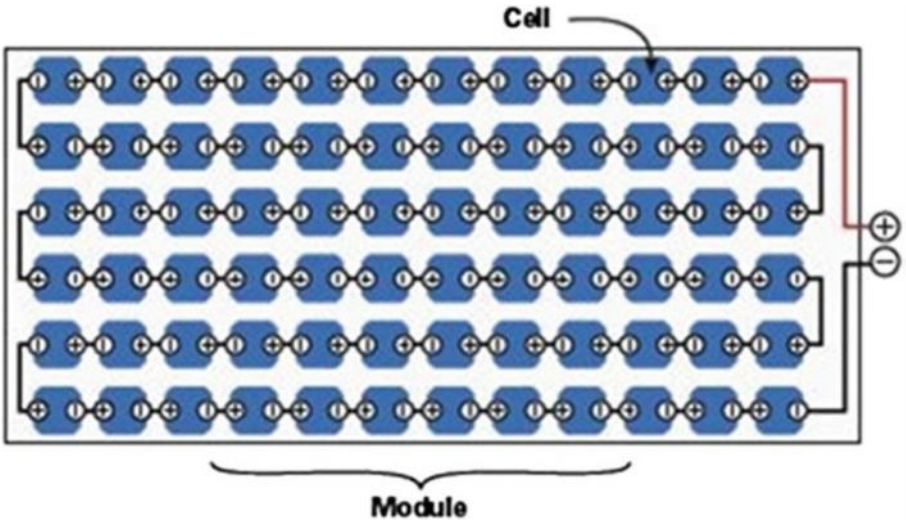

Figure 2.3. Connection of PV cells [16].

PV modules have two types:

- PV – string module
- PV – array module

A string can be explained as a cluster of modules connected in a series. The string module increases the voltage of solar DC system devices producing up to 600 V for high voltage electric gird systems (Figure 2.4).

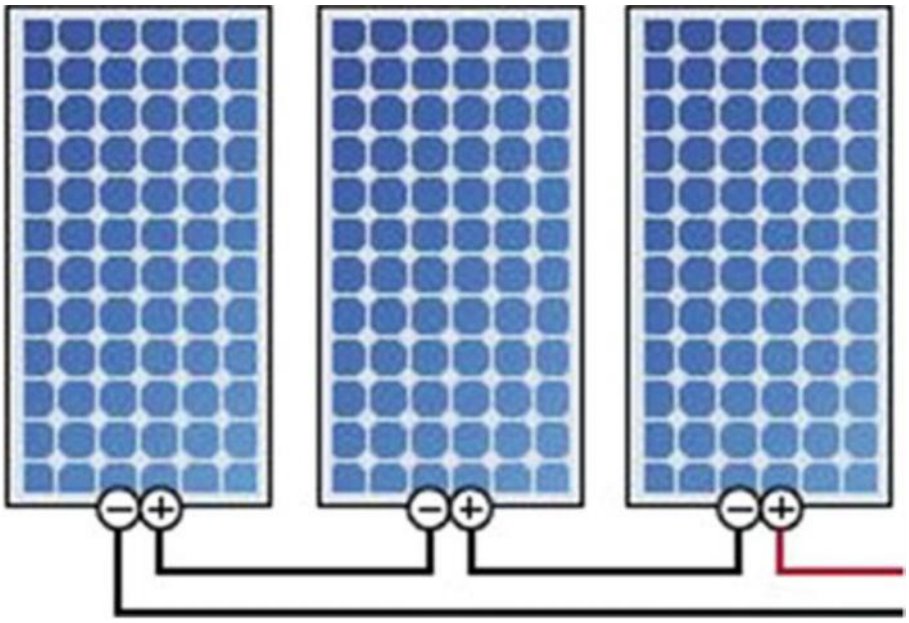

Figure 2.4. An example of a PV string.

If PV modules connected in array form electricity generation ranking will increase [17-19].

For increasing voltage, every module joins to form series called string-series. For improving the power production capability, strings must be connected in parallel (Figure 2.5).

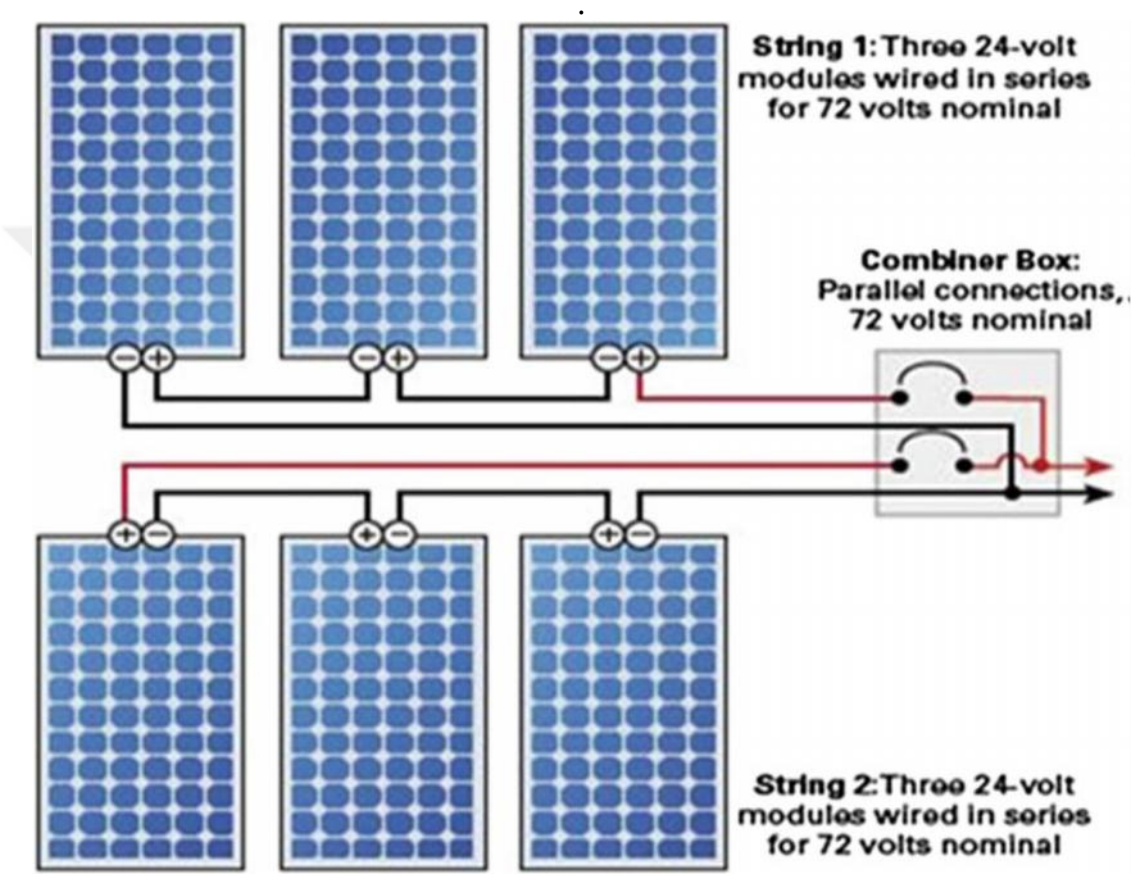

Figure 2.5. PV array connected in a series string [16].

Series string PV modules are generally available as rectangular-shaped segments of different sizes or slate-forms fixed on rooftop like roof-tiles, which can be adjusted to form any kind of pattern. The tiles can be arranged in portrait, landscape, or form of T (for roof lights) [16,18,19].

If slates are chosen, they are fixed on roof but four-edged ones are placed on inner surface of the roof or mounted in rooftop brackets. Installation choice has nothing to

do with power generation. Certain PVs are fixed as a pattern, so they have the capacity to bear the building loads and still function in a reliable way.

Both types (stand-alone/hybrid), backup generators have to produce power during outage. For grid-based power generation, nothing exists as grid itself works like buffer [18, 19]. Load, operational time, system placement and safety are important factors.

Any obtainable rooftop might limit the PV. Moreover, essential restriction for the size of PV system is budget. Roof or any placement area and budgetary limitations are normally the important restrictions for the plan of the PV house.

2.3. WIND ENERGY CONVERSION SYSTEMS

Wind turbine is another type of DER because it transforms wind-power into electricity using wind energy conversion systems (WECS). The wind generators can be classified into in two key categories: induction and synchronous generators (IG & SG) (Figure 2.6). They contain rotors working with slip rings and brushless electromagnetic exciters. Induction generator or double fed induction generator (DFIG) is commonly-used generator type for generating power out of wind energy [20].

Squirrel-cage induction generators (SCIGs) extensively exist in wind-power generators, in which, rotor bars short internally and remain disconnected from external circuit. In permanent-magnet synchronous generators (PMSGs), magnetic power is obtained through permanent form of magnets. Two-type PMSGs have been utilized for power generation through wind: surface-mounted PMSGs & inset-magnet PMSGs.

Some practically working generators are given in Table 2.3, where the voltage/power ratings, speed ranges, and manufacturers of these wind generators are provided.

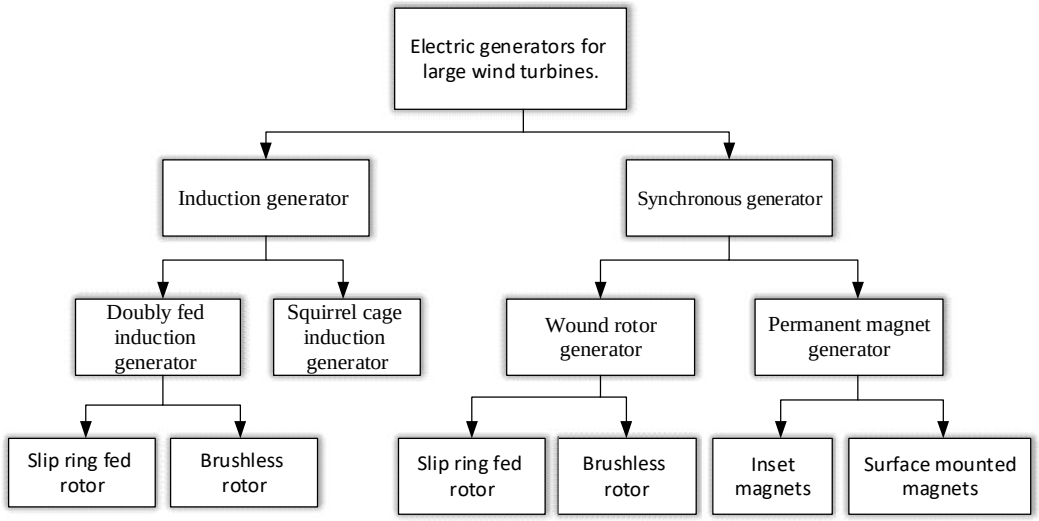

Figure 2.6. Classification of commonly used electric generators in large wind turbines.

Table. 2.3. Generators for WECS.

Generator type	Doubly fed induction generator (DFIG)	Squirrel-cage induction generator (SCIG)	Wound-rotor synchronous generator (WRSG)	Permanent-magnet synchronous generator (PMSG)	
Rated voltage (line to line)	690 V	690 V	400 V	700 V	3000 V
Rated power	2 MW	2.3 MW	2.3 MW	2.75 MW	5.32 MW
Rated stator ferquency	50 Hz	50 Hz	na	na	19.6 Hz
Speed range	900-1900 rpm	600-1600 rpm	6-21.5 rpm	6-18 rpm	58.6-146.9 rpm
Number of poles	4	4	72	120	28
Brand/model	Gamesa G 90	Siemens SWT-2.3-101	Enercon E-70	Avantis AV928	Multibrid M5000

The main components of wind-power turbines are towers, rotors, and nacelles. The nacelle helps mechanical transmission process within the generator.

Wind-powered turbines use the kinetic energy, which is obtained by wind power through rotors this power is shifted or released to the induction generator with the help of a mechanical gearbox. Wind turbines drive the generator shaft and it is driven for generating electricity. Wind-powered turbines use either horizontal or vertical design.

Size of a commercially turbine used until the mid-1990s was 300 kW, but later, high capacity equipment (up to 5 megawatts or more) are developed and installed [21].

2.4. COMBINED HEAT AND POWER SYSTEMS

Another type of distributed generation is combined heat and power (CHP) systems that generate at the same time electricity and useful thermal energy in a single, integrated system. CHP systems generate and deliver power with 90% efficiency that significantly decreases emissions/MWh.

CHPs considerably lessen costs for industries and commercially-utilizing clients and reduce emission as well. CHP technologies are designed and sold for power-generation on the clients' site, so, they have power and heating systems.

Many problems like interconnection costs, environment-related restrictions or technology prices have limited their wider acceptance.

Many of them are in process of improvement, which will hopefully decrease both their costs and emissions and increase their efficiency. Today's commercial scenario is rapidly changing because of utility-restructuring and more customer-choice.

CHP systems are primarily comprise of the following technologies:

- Internal combustion (IC) engines
- Stirling engines
- Microturbines.
- Fuel cells.

Choosing any CHP relies on the needed power for its process, its duty cycle, its space issues, thermo-dynamic requirements, environmental laws, fuels, costs and interlinking issues. The Table 2.4 briefly describes specifications of CHPs according to their technological characteristics [22].

Internal combustion engines are intended for transforming chemical energy into useful mechanical energy. An internal combustion engine is a heat engine where fuel is burnt with oxidizers. In combustion chamber occur high-temperature and high-pressure gases that produced by the combustion and act to components of engine like pistons, turbine blades, rotor or a nozzle. IC engines include intermittent combustion engines like Wankel engine and Bourke's engine and the continuous combustion engines like Jet engines, rockets and gas turbines. They are fed fuels are diesel, gasoline and petroleum gas. IC engines use natural gas, gasoline, diesel fuel or fuel oil. Nowadays, there is growing interest to use of renewable fuels like biodiesel for compression ignition engines and bioethanol or methanol for spark ignition engines. Sometimes for combustion is used hydrogen which can be made from fossil fuels or renewable energy [5].

Table 2.4. CHP technologies [22].

	IC Engine	Steam Turbine	Gas Turbine	Micro-turbine	Fuel Cells
Technology Status	Commercial (3% of existing CHP capacity in NY, 66% of sites)	Commercial (14% of existing capacity, 13% of sites)	Commercial (83% of existing capacity*, 21% of sites)	Early entry	Early entry/ development
Electric Efficiency (LHV)	25-45%	5-15%	25-40% (simple) 40-60% (combined)	20-30%	40-70%
Size (MW)	0.05-5	0.01-100	0.5 -50	0.025-0.25	0.2-2
Availability	92-97%	Near 100%	90-98%	90-98%	>95%
Start-up Time	10 sec	1 hr-1 day	10 min –1 hr	60 sec	3 hrs-8 hrs
Fuels	Natural gas, biogas, propane, liquid fuels	All	natural gas, biogas, propane, distillate oil	natural gas, biogas, propane, distillate oil	hydrogen, natural gas, propane
Emissions (lb/MWh)	0.4-10	Function of boiler emissions	0.3-2	0.4-2	<0.05
Uses for Heat Recovery	hot water, LP steam, district heating	LP-HP steam, district heating	direct heat, hot water, LP-HP steam, district heating	direct heat, hot water, LP steam	hot water, LP-HP steam
Thermal Output (Btu/kWh)	1,000-5,000	n/a	3,400-12,000	4,000-15,000	500-3,700
Useable Temp (F)	200-500	n/a	500-1,100	400-650	140-700

Microturbine means small combusting turbines producing power energy from 25 kW until 500 kW. Microturbines are advanced forms of basic turbo-chargers, which are used in automotive vehicles and trucks, aero planes' auxiliary power units (APUs), and mini jet-engines. Latest technology for distributed generation called Micro turbines is used for fixed applications, which generate power. Area micro turbine is actually a combustion turbine, which produces small-scale heat and electricity.

They have been success mainly because of other electronic advancements that allow automatic operations and interface with commercially used power grids. Electronic power switching technology has largely finished the requirement for linking generator with the power grid. This helps integrating the generator with the turbine shaft.

They can perform using most of the commercially available fuel types like gasoline, natural gas, propane, diesel, kerosene oil and newly found renewable fuels such as E85, bio-diesel and biogas. Micro turbines can be categorized according to physical component arrangement, so they are either single shaft or double-shaft, either simple cycle, or recuperated cycle, either inter-cooled reheat types.

These machines normally rotate at the rate of 40,000 RPM (revolutions per minute) and their bearing-selection whether they will be run by using oil or air will depend on usage. The speed range of a single-shaft micro turbine is from 90,000 RPM to 120,000 RPM (revolutions per minute). The single-shaft micro turbine has a common design, lower cost and it is easy-to-make.

Micro turbines have numerous benefits in comparison with some technological options for small-level electricity needs, fewer movable segments, smaller size, less weight, higher performance, low emitting pollution, low power cost and chances of reusing wasted energy.

Wasted heat can be recovered, which could be utilized along with this type of system for achieving > 80 percent efficiency. They have smaller size, comparatively lower capital costs, lower maintenance and operational costs, and automated electronic

system controls; therefore, micro-turbines can win highly considerable market share in the electricity market.

Moreover, micro turbines provide efficient and clean power generation solutions to mechanical drive markets for meeting the demands for compression and air-conditioning.

Fuel cells utilize dependable and time-tested cells. They are used since their invention in 1800s and now, they are considered as a trusted technology, which is evident from the fact that they were extensively used in NASA space flights as backup power sources and it can help obtaining clean drinking water as a by-product after converting hydrogen into electricity.

Fuel cells are galvanic cells, though which, chemical energy obtained through a continuously supplied fuel and an oxidant is changes into electrical power.

Fuel cells typically mean hydrogen-oxygen fuel cells. Although fuel cells do not store energy, they contain just a converter. Energy is chemically bonded with fuels and it is present in this form in fuel cell. Producing electric energy from chemical energy is mostly done by incineration and recovery of hot gases in a heat engine with a downstream generator.

Thus only chemical energy is produced by combustion of thermal energy and later, it is converted into the mechanical energy. Through this process, power is generated in the generator. However, fuel cells are needed for getting the transformation without the conversion into heat, electricity, and therefore, they are potentially more efficient.

Hydrogen exists in magnanimous quantities in our universe but on our planet, it exists in a combination with other elements and so, it must be extracted and separated from other substances for use. This process needs steady input of energy. For high-scale electric production, hydrogen is normally taken out of natural gas, which is costly nowadays and besides, the process of extraction releases carbon dioxide but quite lower quantities than carbon dioxide release during

combustion. Some natural gas fuel cells are operating in many countries for more than a decade.

- Fuel cells have the capability to run off hydrogen, which is generated through renewable methods including solar and wind power and they can also use methane, which is produced during the treatment of wastewater. It is also produced through anaerobic absorption of wasted organic products.
- They are versatile, which enables them to store basic, reserved or auxiliary electricity, and they perform as range extenders with battery series or work in partnership with systems using renewable energy.
- They act like batteries but unlike batteries, they need fuel-based (hydrogen-based) input.

As discussed earlier, extracting hydrogen from natural gas is a costly option and it is energy-intensive as well, which limits its mass adoption in the ongoing circumstances. However, when used it as kind of backup system for generating power because every fuel cell adds resilience to the distributed power system. Table 2.5 illustrates fuel cell types and characteristics [26].

Table 2.5. Fuel cell types and their characteristics [26].

Fuel Cell Type	Electrolyte	Operating Temp	Power (kW)	Fuels	Primary Applications	Benefits	Efficiency %
Alkaline (AFC)	Aqueous solution of potassium hydroxide soaked in a matrix	90–100ºC	10–100kW	Hydrogen	Controlled aerospace and underwater environments	Small size, high efficiency ,water production	60%
Direct Methanol (DEMFC)	Perfluorosulfonic acid	60–130ºC	<1–50kW	Methanol	Portable power, small vehicles	Ease of fuel transport, energy density	30–40%
Molten Carbonate (MCFC)	Solution of lithium, sodium, and potassium carbonates	600–700ºC	300kW–3MW	Reformed Hydrocarbons	Distributed power	High efficiency, fuel flexibility, combined heat and power operation	50%
Phosphoric Acid (PAFC))	Phosphoric acid soaked in a matrix	150–250ºC	100–400kW	Reformed Hydrocarbons	Distributed power	--	40%
Polymer Electrolyte Membrane (PEMFC)	Perfluorosulfonic acid 80ºC	80ºC	1–100kW	Reformed Hydrocarbons	Transportation	Low temperature, flexibility, higher power density	30–40%
Solid Oxide (SOFC)	Yttria stabilized zirconia	700–1000ºC	1kW–10MW	Reformed Hydrocarbons	Distributed and utility scale power	High efficiency, fuel flexibility, combined heat and power operation, amenable to hybridization	60%

2.5. SMALL-SCALE HYDROELECTRIC POWER GENERATION

Hydropower means electricity generated through fresh water movement in the rivers and lakes. On high ground, water stores gravitational energy, which can be collected by turbines when it flows downstream. Gravity makes water to flow upside down and this movement produces kinetic energy, which creates mechanical power. Later, it is again converted from mechanical energy to electrical energy through hydroelectric power stations.

Small-scale hydropower (SHP) generation units are normally the cheapest systems for generating power. It is a popular and open-to-development technology. It has great potential specifically in the underdeveloped parts of the world [27].

Its features include flexibility and reliability. Moreover, its quick shutdown and startup responses give it edge in the world of power generation [28].

SHPs use water for generating power, so, power-generation does not depend on fuel cost. So it can meet the increasing power needs [29].

Experts believe that small hydropower plants are sources of clean power generation, so they are environment-friendly because they don’t create environmental pollution or greenhouse gases. Pelikan et al. (2006) mentioned: “1 GW·h of power production through small hydro-power generation plants reduces 480 tones carbon dioxide”. These initiatives have longer lifespans and need limited upkeep [30].

Share of SHP in the global renewable energy supply is higher than another RES. The Table 2.6 presents worldwide tendency of power generation through renewable sources of energy.

Table 2.6. Power generation through each renewable energy resource [28].

Large hydro (>10 MW)	86 %
Small hydro (<10 MW)	8.3 %
Wind and solar	0.6 %
Geothermal	1.6 %
Biomass	3.5 %

2.6. STORAGE DEVICES

The criterion for smooth MG operation adds and includes power storing units to balance the demand of power in short-term.

Generally, MG power systems store power through generator inertia. Whenever there is a requirement for more electricity, the system makes minor alteration in the system's frequencies depending on its size [6].

Consequently, a micro-sources system, which are created for functioning the islanding mode, has to give storage possibilities to assure balance of energy [2].

Micro sources, (for example microturbines or fuel cells), having longer-span constants between 10 and 200 seconds, and storage is significant for balancing the power and to manage load changes [6]. When immediate and unpredicted system-change occurs, they perform like AC sources.

However, their issues make them store less energy. The backup energy storing units are needed and they should be added to the MG systems to assure uninterrupted supply of electricity. Storage devices for MG systems have batteries, flywheels and super-capacitors [31].

The battery technology is going to get more demand in upcoming 5-year time [21]. The Table 2.7 shows essential features of all three storage devices. It also shows that

all of them have efficiency between 90 to 95%. However, using batteries is more economical if we compare it with rest of the two options.

Batteries have harmful effect on the environment while rest of the options have lower environmental hazard.

Useful lives of devices like supercapacitor or flywheel are generally > 10 years but battery-life is maximum 5 years and it needs service every year (Table 2.7).

Table 2.7. Storage devices' features in MG system [32].

Basic features	**Battery**	**Flywheel**	**Supercapacitor**
Continuous power (W/kg)	50–100	200–500	500–2000
Typical backup time	5–30 min	10–30 sec	10–30 sec
Losses at standby	Very low	Variable	High
Environmental Impact	Medium-high	Low	Low
Maintenance	1/year	1/5 years	None
Charging efficiency (%)	75–95	90	85–95
Current energy price ($/kWh)	150–800	3000–4000	4000–5000
Service life (year)	5	20	>10

CHAPTER 3

MICROGRID CLASSIFICATION

3.1. MICROGRID CONCEPT

Consortium for Electric Reliability and Technological Solutions (CERTS) and EU Commission on Microgrid are pioneers of MG. According to CERTS: “Microgrids are a group having microsources and it works like a centrally-controlled power generation systems generating heat and power.

The microgrids are electronically designed to enhance the power-reliability and power supply continuity” [3]. A vision of MG by CERTS has been exhibited in Figure 3.1.

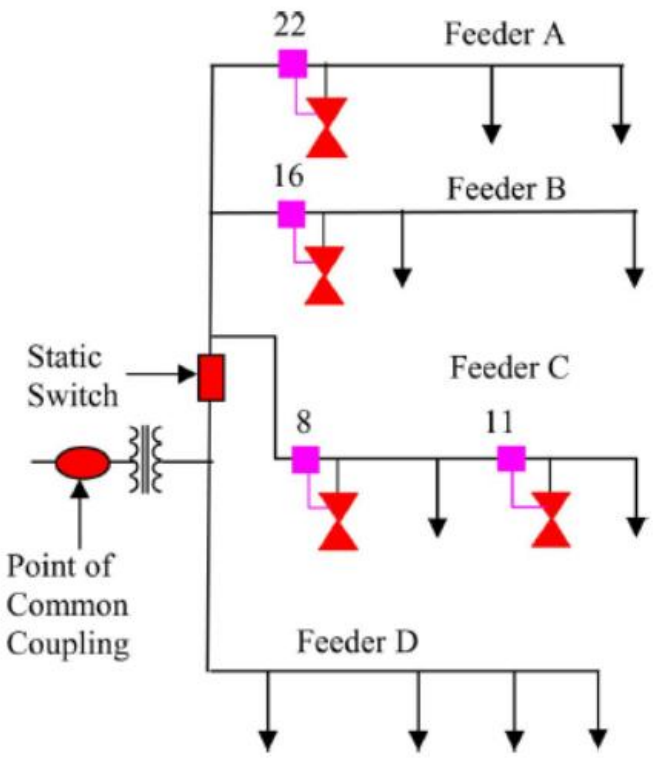

Figure 3.1. Microgrid structure.

European Union conducted some research projects, which state [33,34] that Microgrid basically situated in LV power-distribution systems containing some resources called as distributed energy resources (like PV, microturbines, fuel cells, etc.), storage devices like batteries, flywheels and flexible loads. A vision of MG by European Union research projects has been presented in Figure 3.2.

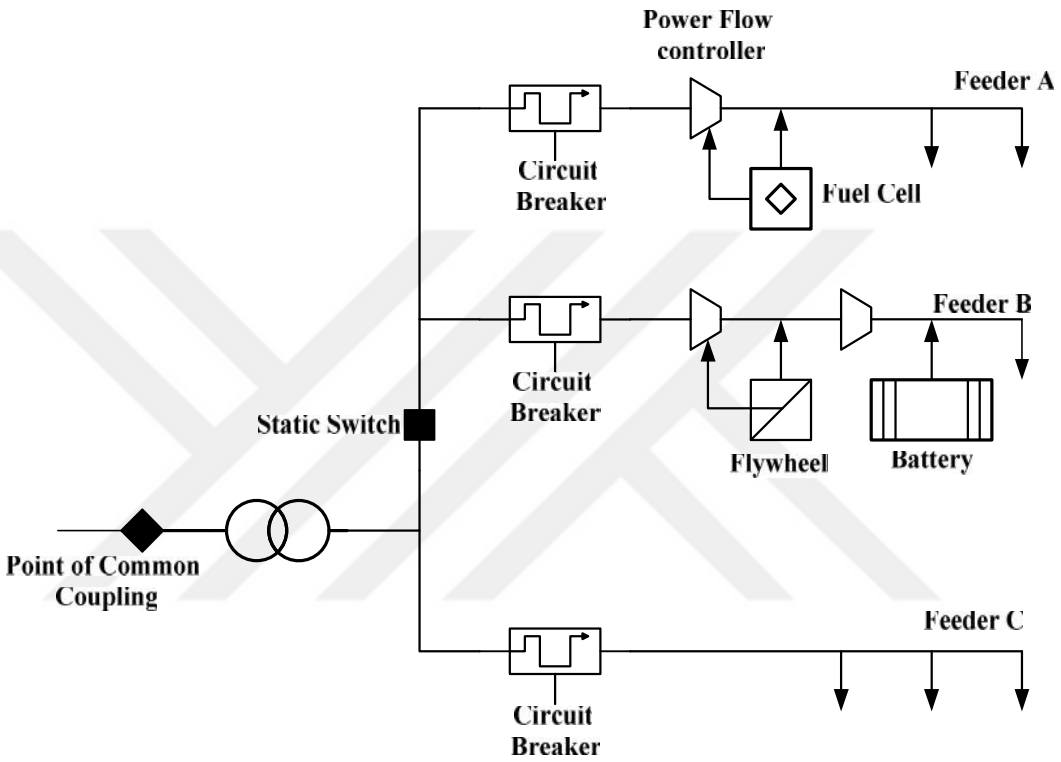

Figure 3.2. A vision of MG by EU projects.

Microgrid should be considered as supply-side integration platform for equipment involved in microgeneration and it is also deals with factors like load controls and power-shortage units of a local distribution grid. Concept of Microgrid focuses on local power-supply to local load. So aggregating models, which disregarded placements of generators such as virtually-operated power generation plants, cannot be included among microgrids. MGs should have supply-side and demand-side resources. Normally, it has LV microgeneration capacity below MW range [35, 36].

3.2. TYPES OF MICROGRID

Microgrid is commonly classified into four types (Table 3.1).

Table 3.1. Microgrid types [23].

Type of Microgrid	Example
Separated island microgrid	One village, city or island outside utility grid
Low voltage customer microgrid	One household that includes DER
Low voltage microgrid	Low voltage network that can include many DER units and customers
Medium voltage feeder microgrid	Output of one high voltage/medium voltage substation

In first type of MG – island microgrid, which comprises of some DGs while some DSs provide sufficient power to small-scale customers or communities. This has been separated from utility grid as its remoteness does not allow getting access to main grid.

In second type, LV microgrids meet the electricity requirements on small scale like commercial farm or a farmhouse located in isolated area. It works as a parallel system to grid-system. So, if any faults occur in distribution network DG or DS units meet the customer's power requirements in the island mode.

The third-case LV microgrid provides services to many LV clients and in this case, the power production depends on many small-scale DGs including solar panels, wind turbines or a microturbines. LV microgrids can have limited range or wide range because on one hand, it provides electricity to just a few consumption points and it can also provide it to entire low-voltage network operating with the help of either MV or LV transformation system.

The fourth type of MG classified as LV-microgrid grouped into MV-microgrid with DG units that have high production capabilities. Then these DG units will connect to the main HV/MV distribution network [23].

The above mentioned four options are represented in the Figure 3.3.

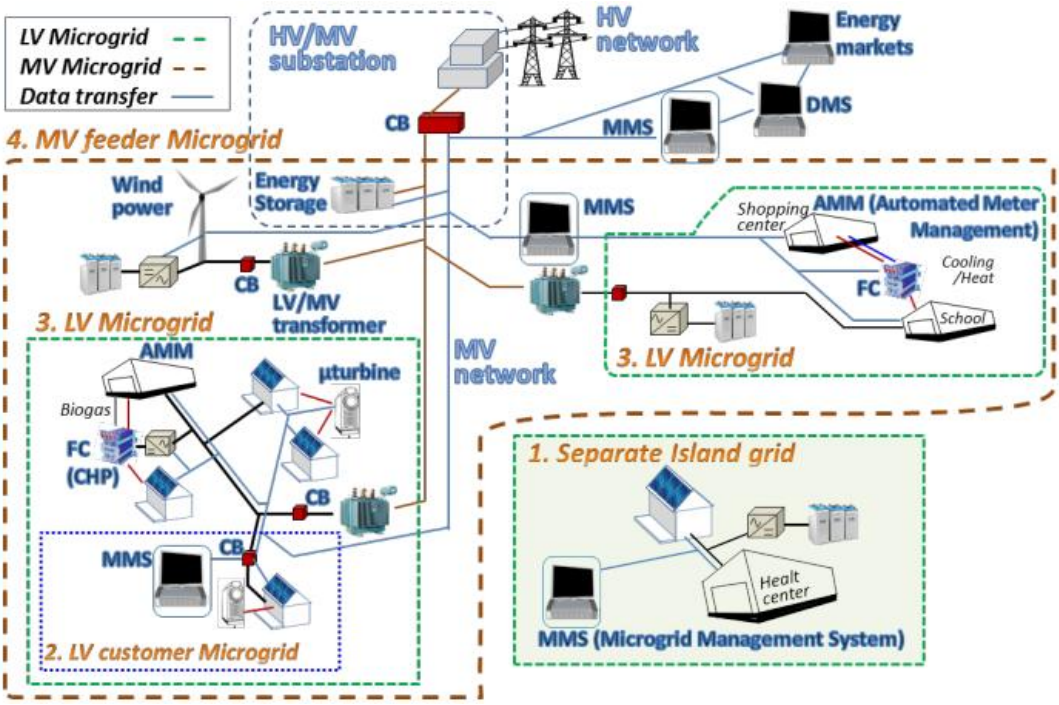

1. Separated island microgrid
2. Low voltage customer microgrid
3. Low voltage microgrid
4. Medium voltage microgrid [23]

Figure 3.3. Types of microgrids.

All these microgrids show that microgrids can have diversity of scales. The capacity of LV customer-side grid can be lesser than 10 kW. Island and low-voltage microgrids have more than one DERs that ranges from 10 to 100 kW and its real-time installed capacity will below MW range.

With increasing of MG scale, i.e. numbers of distributed generation and storage units balancing capacities and controllability will improve and therefore reliability and stability of the system will increase [24].

Microgrid size is linked with its voltage. The customer's LV grids are linked with LV central grid whereas LV micros, which have several DERs or clients, is linked with MV-central grid [25].

Microgrid configuration is possible through the way power is transmitted and distributed through microgrids (Figure 3.4). It has higher frequency (HFAC) AC MGs or DC MGs, hybrid DC/AC MGs, and MGs belonging to the category of line frequency AC (LFAC).

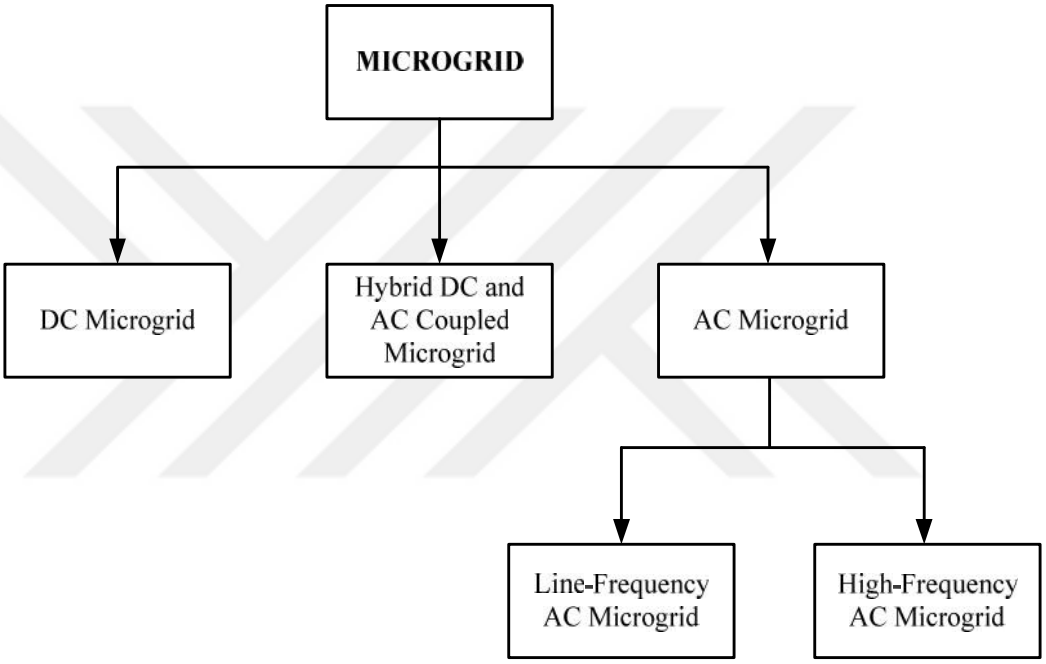

Figure 3.4. Classification of microgrids based on power type.

3.2.1. AC Microgrid

3.2.1.1. HFAC Microgrid

There is single-phase 400 Hz distributed network system which basically used in the military and aviation system [37]. Microgrid system has been operating for military and aircraft systems and this has been operational since a very long time. The size and weight of power-electronics equipment can be reduced when frequency is increased.

HFACs mainly operate on small areas, because long distances increase power losses. Thus, this concept is only useful for localized power generation systems [38]. An example of HFAC microgrid is available in [39].

The unified power quality conditioner is normally installed to limit voltage-distortions in the non-linear power loads. The UPLC is used to connect HFAC link to the main grid and control power flows from/to the microgrid.

Obviously, two FACTS systems have necessary components of control-mechanism, which controls power flow through microgrid, which enables a microgrid to work at very high frequencies between 400 to 500Hz. But the power loss and voltage droop increase with frequency and line-length in HFACs. So, these factor are needed to be considered while sizing any HFAC microgrid [38,39].

3.2.1.2. LFAC Microgrid

Microgrid type LFAC has been area of interest for researchers. Wide-range of possibilities of LFAC microgrids have been discussed in the available literature [21, 34, 44, 47].

In LFAC microgrids DERs are connected to MG via a common bus. In this case DC current of microsource is converted to 50 Hz AC using inverter and transmitted to the customer side [21].

3.2.2. DC Microgrid

DC microgrids are commonly used in telecommunication operations [40], electrically-operated vehicles [41], and for marine electricity-generation [42].

Low-voltage DC (LVDC) microgrids recently became a feasible choice because they can handle intense electronic loads in official and commercial buildings, for example, LVDC microgrids assure commercial-purpose power-generation for highly-sensitive power loads [43].

3.2.3. Hybrid Microgrid

The fundamental microgrid system architecture having DC or AC connections observed in [44,45].

It provides methods for integrating a DER-variety with already available distribution system. DC-/AC-coupled hybrid microgrid needs DC to link distributed energy storing devices linked with AC-DC converters and DC equipment including PVs linked with DC-DC boosting-converters and low-scale turbine, which operate by using gas or wind.

De-coupled management of DC or AC components of microgrid is normally gained through power converters [45].

DC/AC-coupled hybrid-microgrids give concept provides easier approach to link DERs to gain more protection and stable operations and so, it requires more investigation.

3.3. OPERATION MODES OF MICROGRID

MGs function as in:

- disconnected or island function mode, if MG operates autonomously;
- grid-connected mode, if MG is connected to main grid.

In the island operation, local power generation decisions depend on Microgrids' value, availability of basic sources of energy and cost of those sources. Limitations of MV or LV transformers or low voltage network congestions should be kept in mind.

In case of MV or HV system failure, Microgrid transfers automatically to the islanding-operation, which is self-sufficient. Seamless changeover from interconnected to islanding-generation is important for uninterrupted power supply.

Here MCs and LCs perform independently for using local resources efficiently and side by side maintaining system operations in islanded conditions.

Whenever MGs are connected with the grid whether partially or completely, the extra electricity generated in MG can be shifted to the main grid providing auxiliary services. MG has radial feeding devices (A, B and C) possibly existing within the distribution system architecture and loads-collection (Figure 3.5). The radial-type MG connects with the common coupling point by means of static switches.

PCC normally exists as primary transformers and separates main grid from MGs. Every feeder contains circuit-breakers and microsource controllers. Local critical loads shift towards local generation resources while non-critical loads do not have any local generation. The static switch helps islanding the MG when disturbances occur or during maintenance [46].

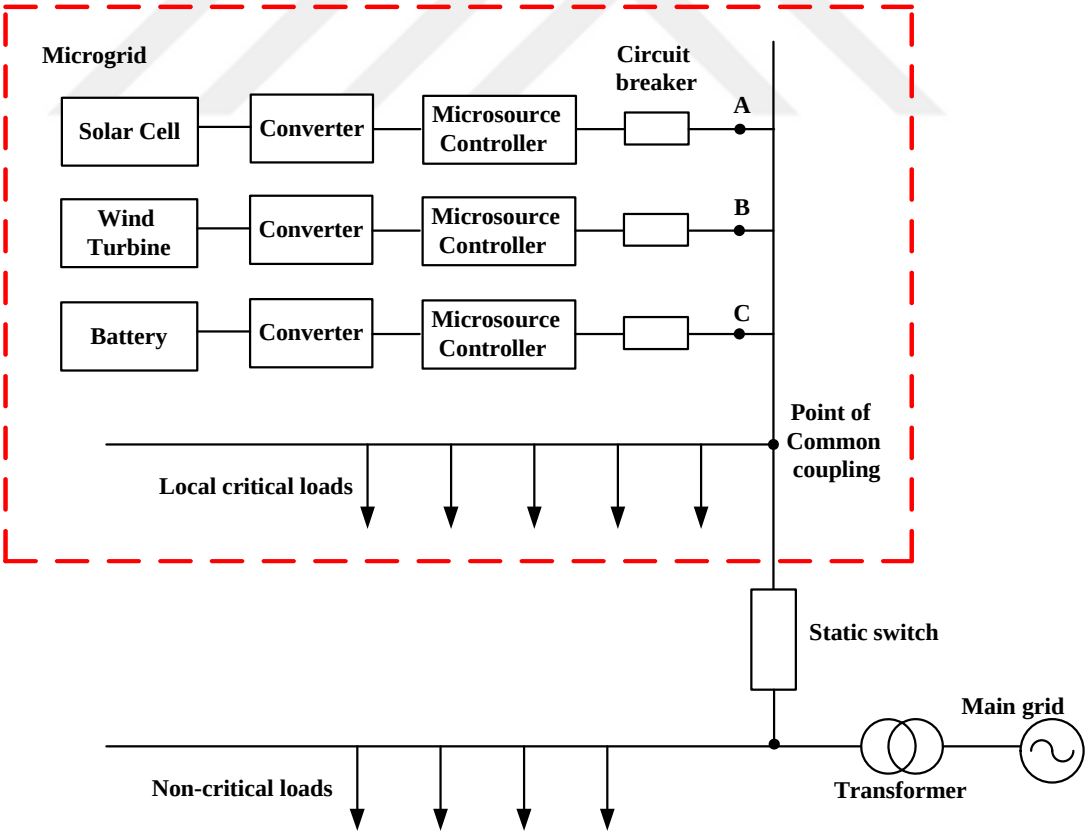

Figure 3.5. Schematic microgrid diagram.

3.4. MICROGRID CONTROL

Hierarchical MG control is classified into primary/secondary/ tertiary levels (Figure 3.6).

Primary or first-level controls are the first in the control hierarchy. It depends on local measurements and requires no communication. It controls current and voltage of distributed generation. It performs to maintain voltage and stabilizes the microgrid frequency following islanding procedure. This control provides for DERs independent active/ reactive power sharing.

Moreover, it protects the system from some really-not-needed currents. These primary controls include basic controlling devices, or "zero-level" devices and they have current controls of the DERs. It also provides reference points to DER current control loops and voltage.

These are generally called zero-level-controls. They function in voltage control modes/PQ [53].

In PQ controlling modes, active/reactive DER electric transmission is managed through already obtained reference points exhibited in Figure 3.7. Control processes use voltage-source converters or VSCs for implementing the controlling strategies. H_1 Controller 1 performs as regulator to the DC-linked voltage and power through magnitude adjustment in the output shown by the converter, i_p . H_2 Controller 2 manages output through scale-adjustment of the output [53,54].

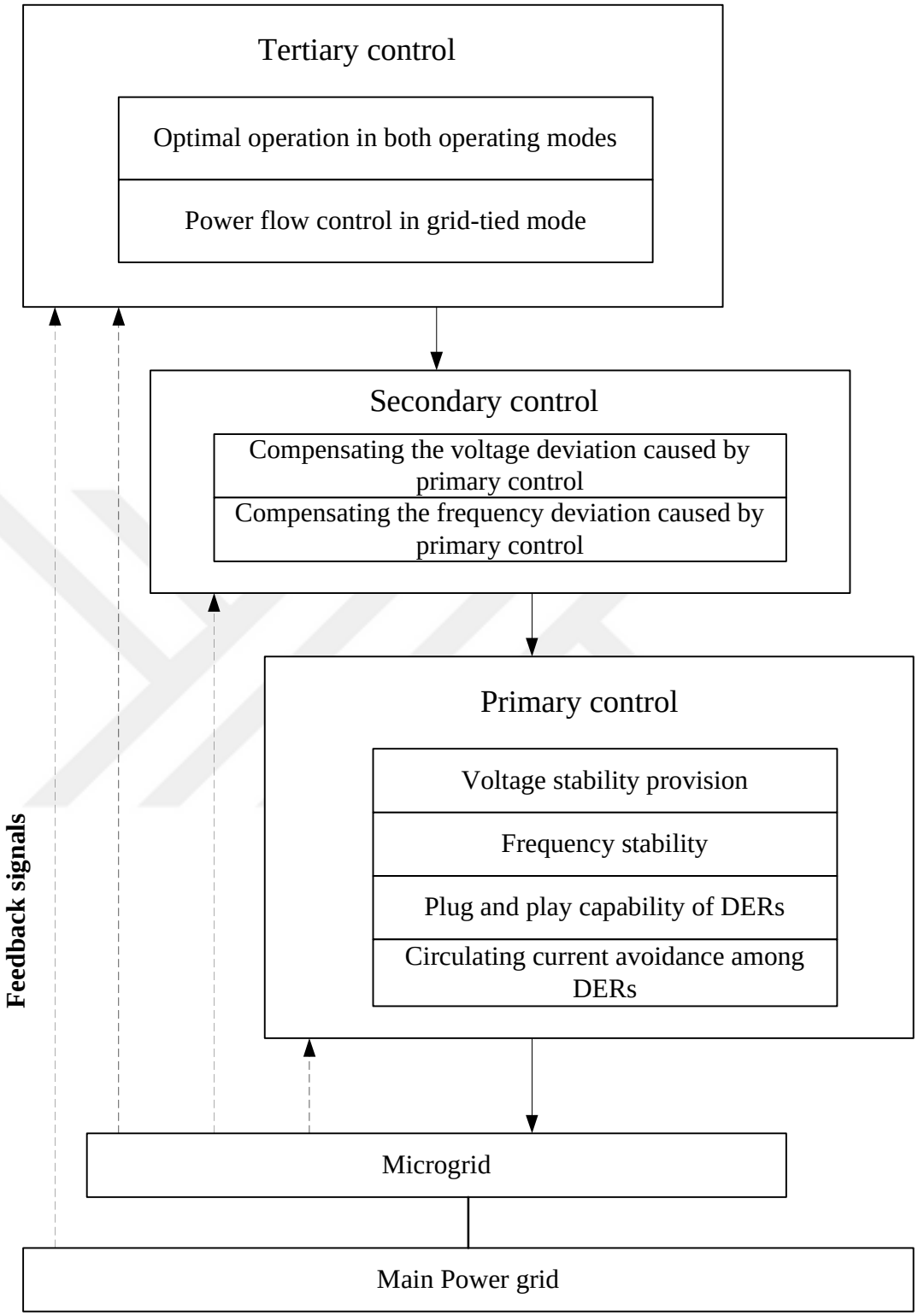

Figure 3.6. Control levels of microgrid [53].

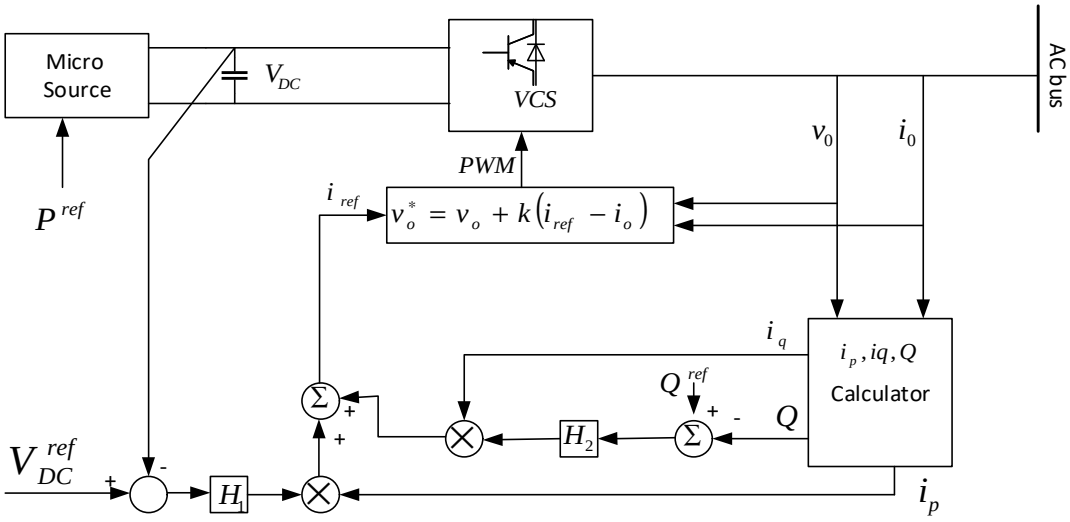

Figure 3.7. Power Quality control-mode with active & reactive power [51].

While operating in the mode of voltage controls, DERs functions like a VSC while we can determine reference voltage, v_0^* , through primary controls and through traditional means through "Droop Characteristics" (Figure 3.8) [53].

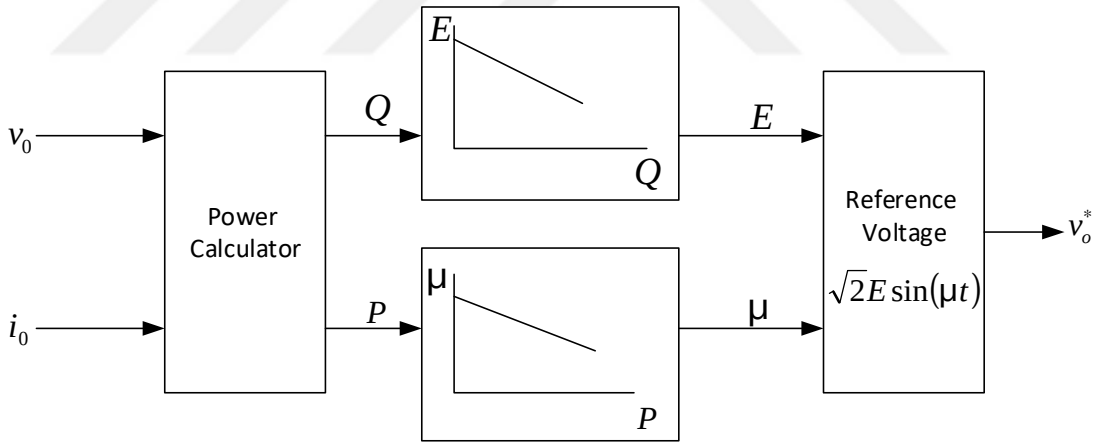

Figure 3.8. Determining reference-voltage in the voltage-control mode [53].

The voltage control mode for control of voltage and frequency loops is illustrated in Figure 3.9. Controller feeds current-signal like feed-forward through transferring function. To take stable transient response proportional, integral and derivative (PID) [55], adaptive [56], along with proportional-resonant controllers [57] have been recommended for controlling voltages.

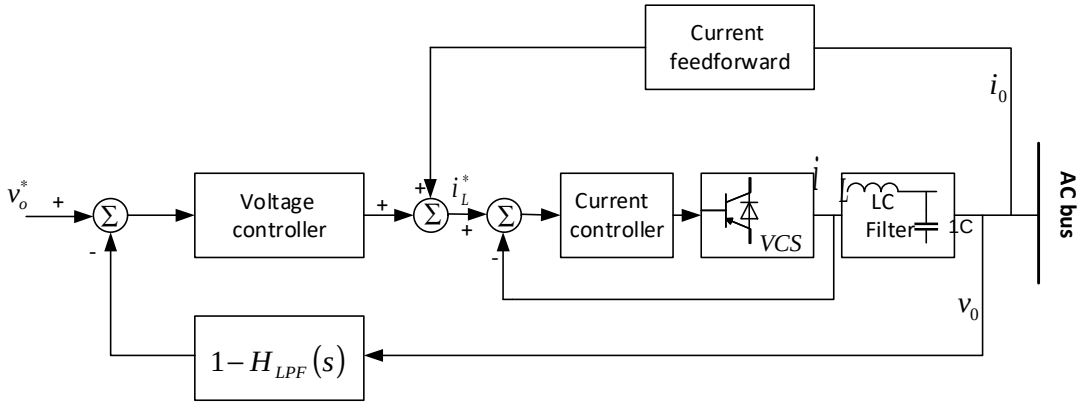

Figure 3.9. Loops for current and voltage control in voltage control mode [48].

Small islanded systems' power quality is significant because of nonlinear/single-phased loads and minimum microgrid-inertia [58, 59]. For advancement in quality of power, some sets of energy sources are linked to shared bus (Figure 3.10). Every converter possess current-controlling loop, which is independent and central voltage-controlling loop, which distributes both active and reactive powers. Voltage-control reference point can be obtained through primary control.

Current controller provides higher power quality on account of eliminating AC bus voltage harmonics [58].

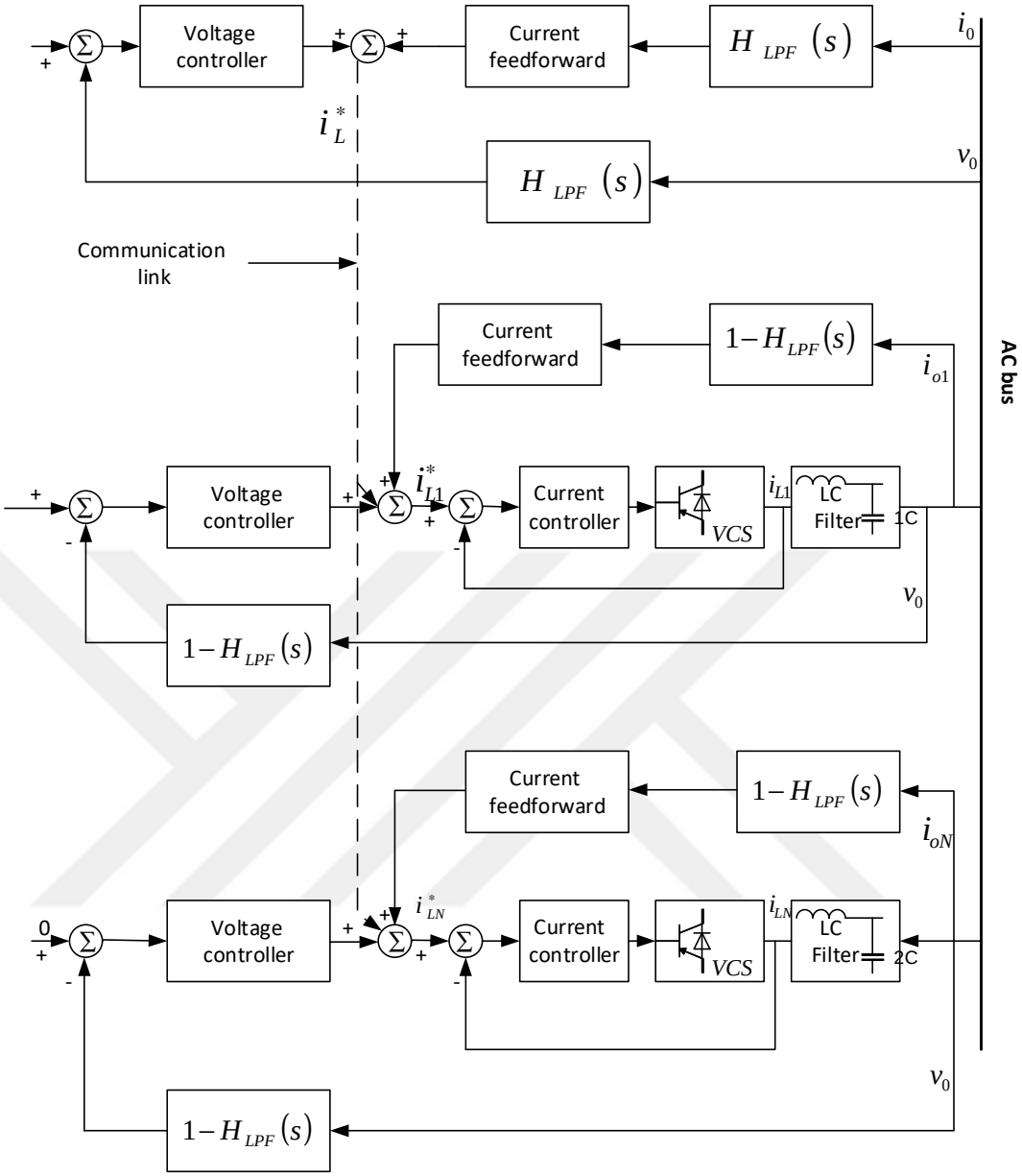

Figure 3.10. Zero-level-controlling loops connected to common AC bus [58].

Some possible benefits and issues of droop method are exhibited in the Table 3.1. According to this Table there are basic conclusions:

- Changed methods other than those, which are applicable to LV microgrids and they de-couple active & reactive controls.
- Flexible load sharing and adaptable droop methodologies are the available options, which help regulating voltage.

- Non-linear loads should be handled with complicated controlling methods like virtual impedance, signal-injection, or non-linear load sharing for diminished microgrid harmonics.
- Adjustable load sharing is the only available process, which adjusts time constant without any impact on DER voltages and frequencies.

Table 3.2. Droop methods implementation by papers.

Droop method	Advantages	Disadvantages
Conventional droop method [60], [61].	• Simple implementation	• Affected by the system parameters • Only functional for highly inductive transmission • Cannot handle nonlinear loads • Voltage regulation is not guaranteed • Adjusting the controller speed for the active and reactive controllers affect the voltage and frequency controls
Adjustable load sharing method [62].	• Adjusting the controller speed for the active and reactive power controllers without compromising the voltage and frequency controls • Robust to the system parameter variations • Improved voltage regulation	• Cannot handle nonlinear loads
VPD/FQB droop method [63].	• Simple implementation • Adjusting the controller speed for the active and reactive power controllers without compromising the voltage and frequency controls	• Affected by the system parameters • Only functional for highly resistive transmission lines • Cannot handle nonlinear loads
Virtual frame transformation method [64],[65].	• Simple implementation • Decoupled active and reactive power controls	• Cannot handle nonlinear loads • The line impedances should be known a priori • Adjusting the controller speed for the active and reactive power controllers without compromising the voltage and frequency controls • Voltage regulation is not guaranteed
Virtual output impedance [50],[66].	• Simple implementation • Not affected by the system parameters • Functional for both linear and nonlinear loads • Mitigates the harmonic distortion of the output voltage • Can compensate for the unbalance of the DER output voltage	• Adjusting the controller speed for the active and reactive power controllers without compromising the voltage and frequency controls • Voltage regulation is not guaranteed

Table 3.2. (continuing).

Adaptive voltage droop method [67].	• Improved voltage regulation • Not affected by the system parameters	• Cannot handle nonlinear loads • Adjusting the controller speed for the active and reactive power controllers without compromising the voltage and frequency controls • System parameters should be known a priori
Signal injection method [68].	• Functional for both linear and nonlinear loads • Not affected by the system parameters	• Complicated implementation • Adjusting the controller speed for the active and reactive power controllers without compromising the voltage and frequency controls • Voltage regulation is not guaranteed
Nonlinear load sharing techniques [69],[70].	• Properly shares the current harmonics between the DERs, and consequently , cancels out the voltage harmonics	• Affected by the system parameters • Poor voltage regulation for the case of precise reactive power sharing • Adjusting the controller speed for the active and reactive power controllers without compromising the voltage and frequency controls

Primary controlling method can create frequency-deviation even in balanced state.

Storing equipments can compensate for this type of deviation but still they cannot power to maintain load-frequency controls in long-run because of lack of energy capacity. Secondary controls or centralized controllers restore microgrid voltage and frequencies; therefore, they compensate for primary-control deviations.

This hierarchy has been created to lower dynamics response as compared to the primary to justify de-coupling of primary and secondary controlling loops and to facilitate their individual blueprints [71].

Figure 3.11 exhibits secondary controls' block diagram and according to the Figure, microgrid frequency and terminal-voltage of any DER are comparable to reference values, ω^{ref} and E^{ref} , respectively.

Individual controls processed error signals and they are described in [70] , final signals ($\delta\omega$ and δE) are transmitted to primary DER controllers for compensating frequencies and voltage deviations [50].

$$\begin{cases} \delta\omega = K_{P\omega}(\omega^{ref} - \omega) + K_{I\omega}\int(\omega^{ref} - \omega)dt + \Delta\omega_s \\ \delta E = K_{PE}(E^{ref} - E) + K_{IE}\int(E^{erf} - e)dt \end{cases} \tag{3.1}$$

where $K_{P\omega}$, $K_{I\omega}$, K_{PE} and K_{IE} are the controller-parameters. Another terminology, $\Delta\omega_s$ in (3.1) is believed to help microgrid-synchronization with the main gird. During islanding mode, the value of this extra term will be zero but $\Delta\omega_s$needs PLL module during synchronizing [72].

During the grid-related functioning, volts and frequencies of the major grid can be seen in (3.1)

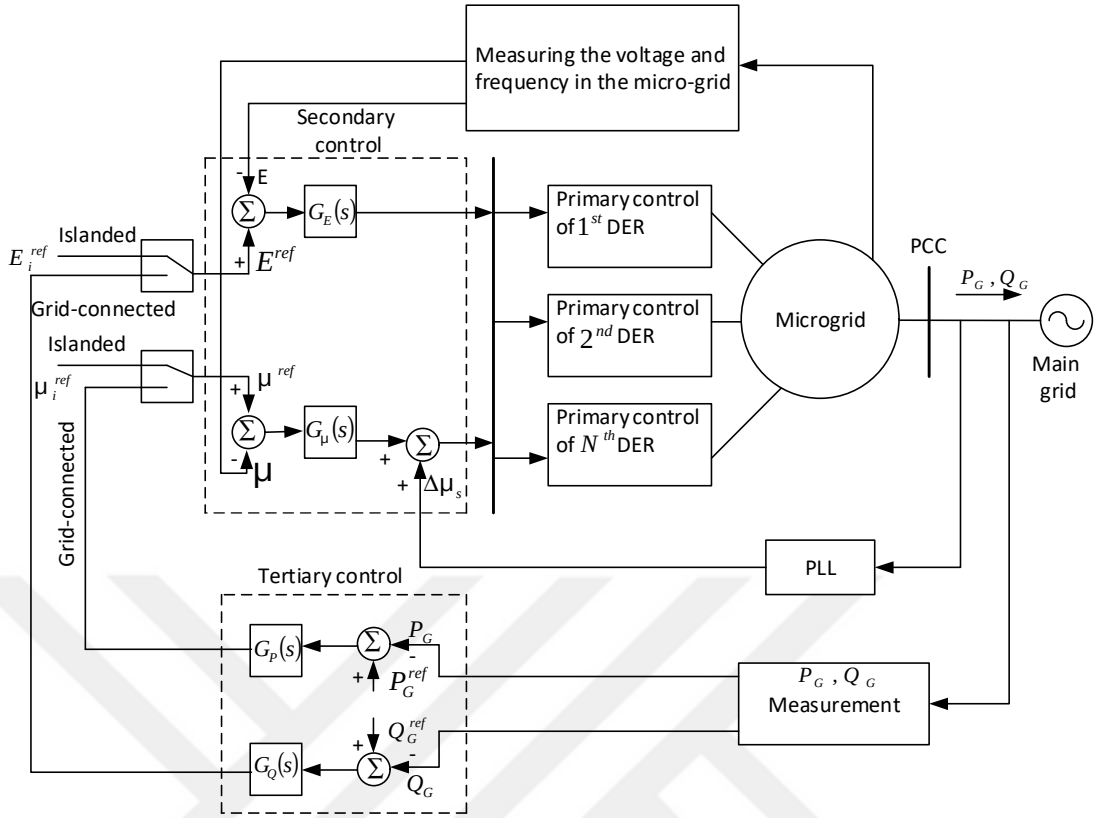

Figure 3.11. Block diagram of secondary & tertiary controlling processes [50].

When the potential function-based technique reach minimized values, the microgrid operates in the desired state (Figure 3.12). DER sets points, which minimizes potential function/s to achieve aims of microgrid controls.

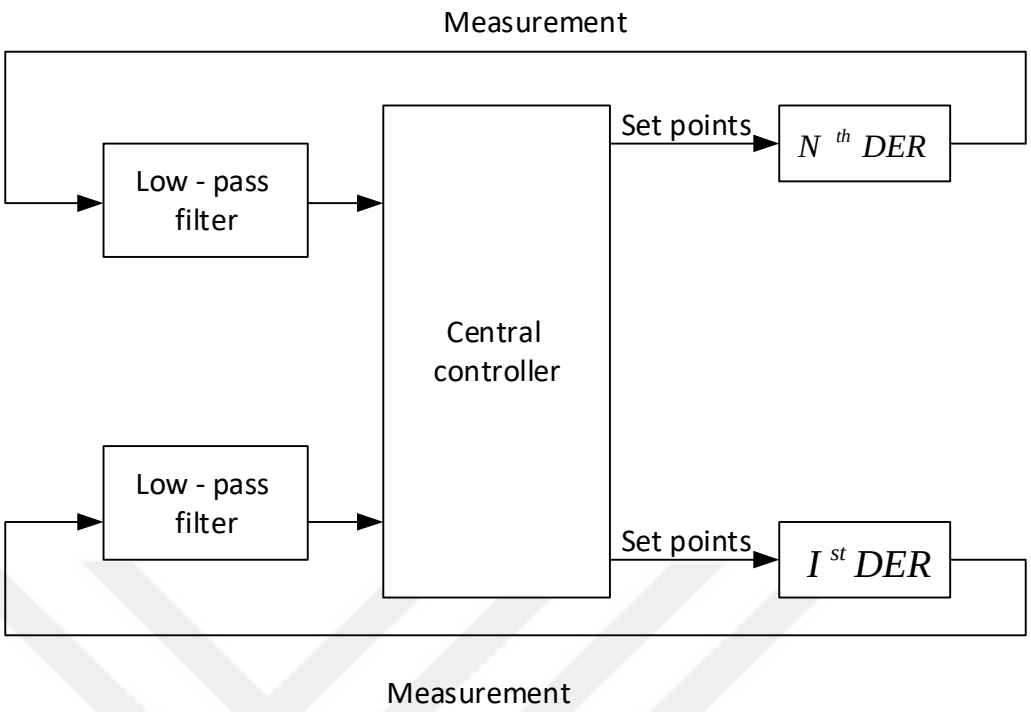

Figure 3.12. Potential function-centered technique block diagram [51].

Secondary controls assure that frequencies and MG voltage-deviations will tend to become zero whenever any change in the supply or system load. It also helps inside ancillary services. Secondary controls compensate frequency and voltage deviations issues created by primary controls.

Ultimately, tertiary controls manage microgrid-main-grid steady power flow of power systems and it also helps making the operation more economical [50-51]. Secondary controls assure quality needs like voltage balance in crucial buses.

Voltage imbalance compensator's function has been exhibited in the Figure 3.13. Initially, the crucial bus-voltage is changed into the d_q reference framework. When sequential voltages d and q are computed for both axis, we get to know voltage imbalance factor (VUF) as

$$VUF = 100\frac{\sqrt{(v_d^-)^2 + (v_q^-)^2}}{\sqrt{(v_d^+)^2 + (v_q^+)^2}} \tag{3.2}$$

Where v_d^+ and v_d^- are negative and positive sequential voltages of components, v_q^+ and v_q^- are negative and positive sequential voltages of quadrature component. The comparison between calculated VUF will be done with calculated reference value, VUF^* , so, PI controller will be the difference between the two and that difference will be multiplied by negative quadrature and direct-voltage components, v_d^- and v_q^- , after which, results were added to DER voltage-controllers to help dealing with voltage-imbalance.

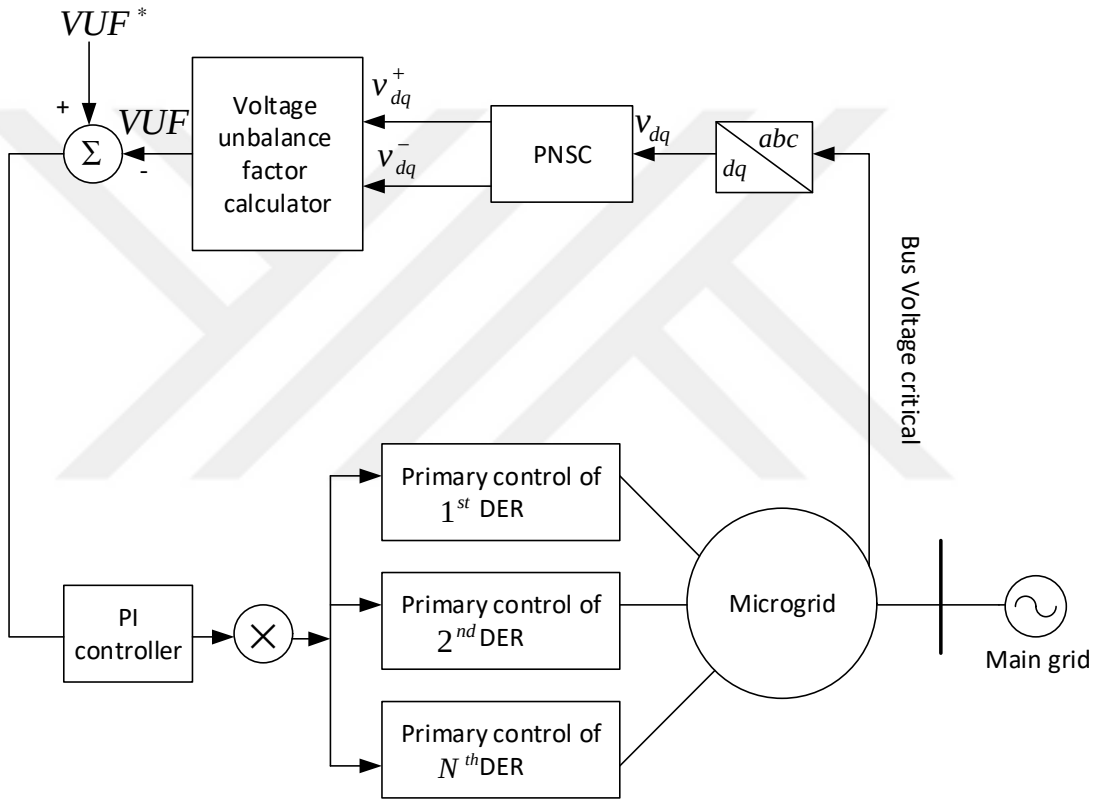

Figure 3.13. Voltage-imbalance compensation in the secondary control.

Tertiary controls act as highest levels and assure optimal operation in both MG modes and they control power flows. They coordinate with many interlinked MGs and it fulfills communication needs with the hosting grid [49].

Tertiary controls are last control level, which addresses microgrid-related economic factors and performs microgrid – main grid power flow management [48]. During grid-tied operations, microgrid – main grid power flow is carried out through

adjustments in DER frequency and amplitude (Figure 3.11). Initially active and reactive MG outputs, P_G and Q_G are calculated.

Then they are analyzed by comparing them with reference values, P_G^{ref} and Q_G^{ref} , to find voltage/frequencies' references, ω^{ref} and E^{ref} based on ω^{ref} and E^{ref} are later utilized as reference values of secondary control (3.1).

$$\begin{cases} \omega^{ref} = K_{PP}\left(P_G^{ref} - P_G\right) + K_{IP}\int\left(P_G^{ref} - P_G\right)dt \\ E^{ref} = K_{PQ}\left(Q_G^{ref} - Q_G\right) + K_{IQ}\int\left(Q_G^{ref} - Q_G\right)dt \end{cases} \tag{3.3}$$

Where K_{PP} , K_{IP}, K_{PQ} and K_{IQ} are gains of controllers [50].

Tertiary controls assure economical operation, for example using gossip algorithm.

Normally, economic needs of the process are met when entire DERs have the same marginal costs, C_{opt} [52,73].

Gossiping algorithm suggests that random power outputs, P_i^0 and P_j^0 , are considered for the i th DER and its partner is, j th DER.

Examining DERs' cost curves, the power output of both DERs, optimum output of both DERs, P_i^{opt} and P_j^{opt} , can be determined. Now each DER converts its output for generating its optimum point. This process will be applied to other DER pairs to make the whole microgrid operate on optimal standard (Figure 3.14) [73].

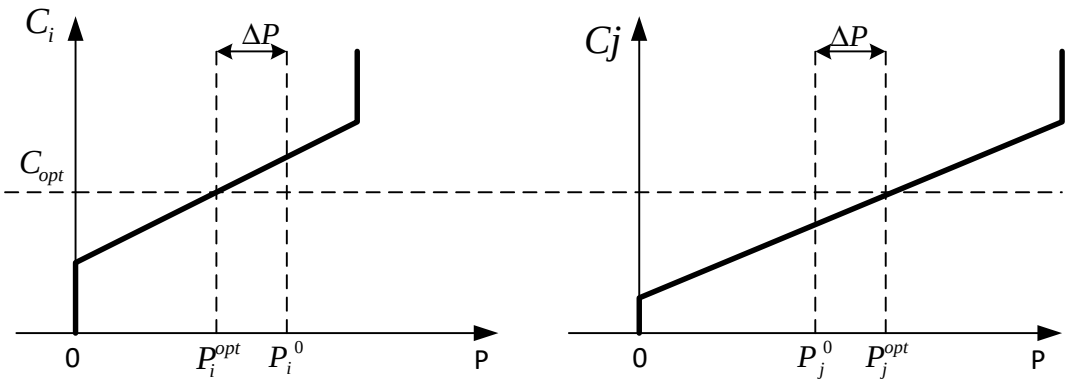

Figure 3.14. MC (Marginal Cost) of the two DERs match [72].

CHAPTER 4

MODELING AND SIMULATION OF KARABUK UNIVERSITY MICROGRID SYSTEM ON MATLAB/SIMULINK

4.1. RESEARCH OBJECT SPECIFICATIONS

Karabuk University substation and distributed energy resources (PV-panel, diesel generator) are chosen for a case study of MG implementation on Simulink/Matlab.

The electric power of Karabuk University (KBU) campus is supplied by TEDAS Inc. company. The power supply distribution network of the Karabuk University (KBU) is represented in Figure 4.1.

Technical specifications of the transformers in the substation and distribution center of KBU can be seen in Tables 4.1 and 4.2, respectively.

Table 4.1. Technical specification of the transformer in the substation of KBU.

Power of Transformer, $S_{r\,QT}$	75 MVA
Primary Voltage of Transformer, U_{nQ}	154 kV
Secondary Voltage of Transformer, U_{rQTLV}	31.5 kV
Short circuit power, S_k	7256 MVA
Relative Short Circuit voltage, $\%U_k$	11.33
Relative Ohmic Short Circuit voltage, $\%\ U_r$	0.7
Nominal Voltage, U_n	31.5 kV

Table 4.2. Technical specification of the transformer (TR1) in the distribution center of KBU.

Transformer Power of Distribution center, S_{rT1}	7600 kVA
Primary Voltage of Transformer in Distribution center, U_{rT1HV}	31.5 kV
Secondary Voltage of Transformer in Distribution center, $U_{r\ QTLV}$	0.4 kV
Relative Short circuit voltage, % U_{krT}	3.9
Copper Loss on Load, P_{krT}	8 kW
Nominal Voltage, U_n	0.4 kV

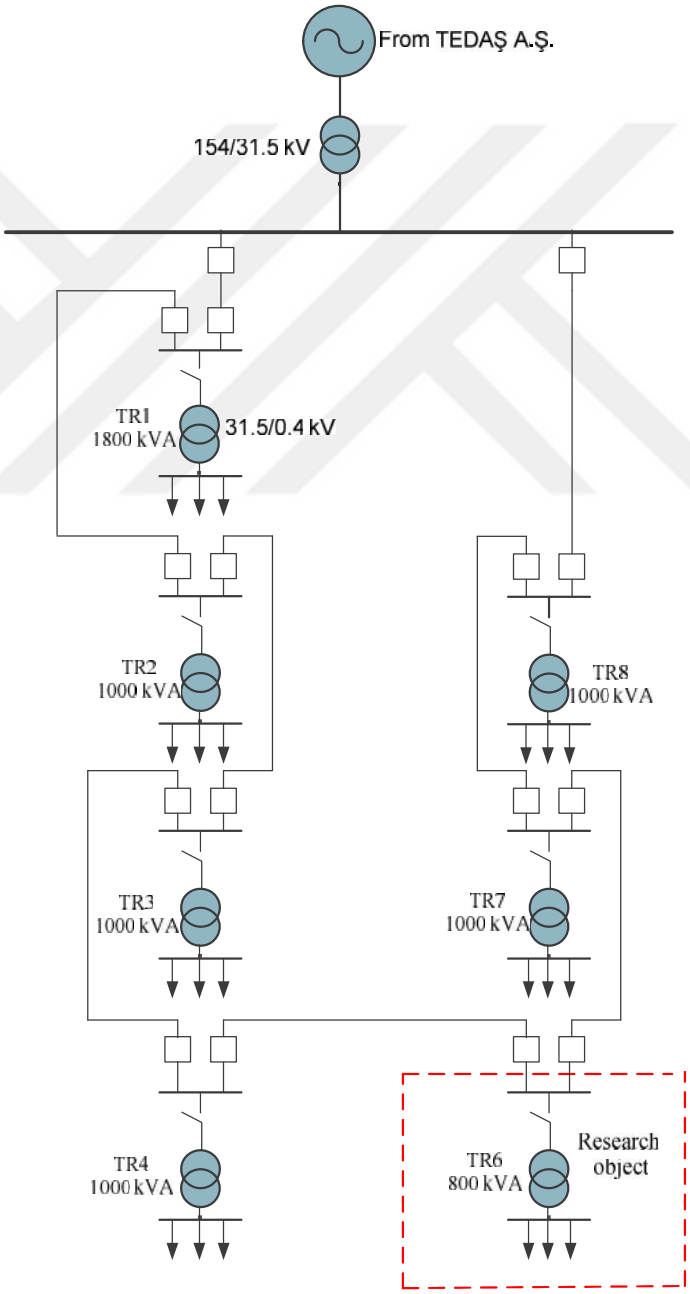

Figure 4.1. Electrical power distribution scheme of Karabuk University.

The low voltage (LV) electric distribution substation (TR-6) of KBU power distribution network is selected as the research object – microgrid of our work (highlighted by red color in Figure 4.1).

KBU Microgrid consists of PV panel FLM-310P-72, inverter XTM 3500-24, batteries MUTLU 6OpzS-600, two critical and one non-critical loads (Figure 4.2). The substation TR-6 provides with electric power two buildings of KBU.

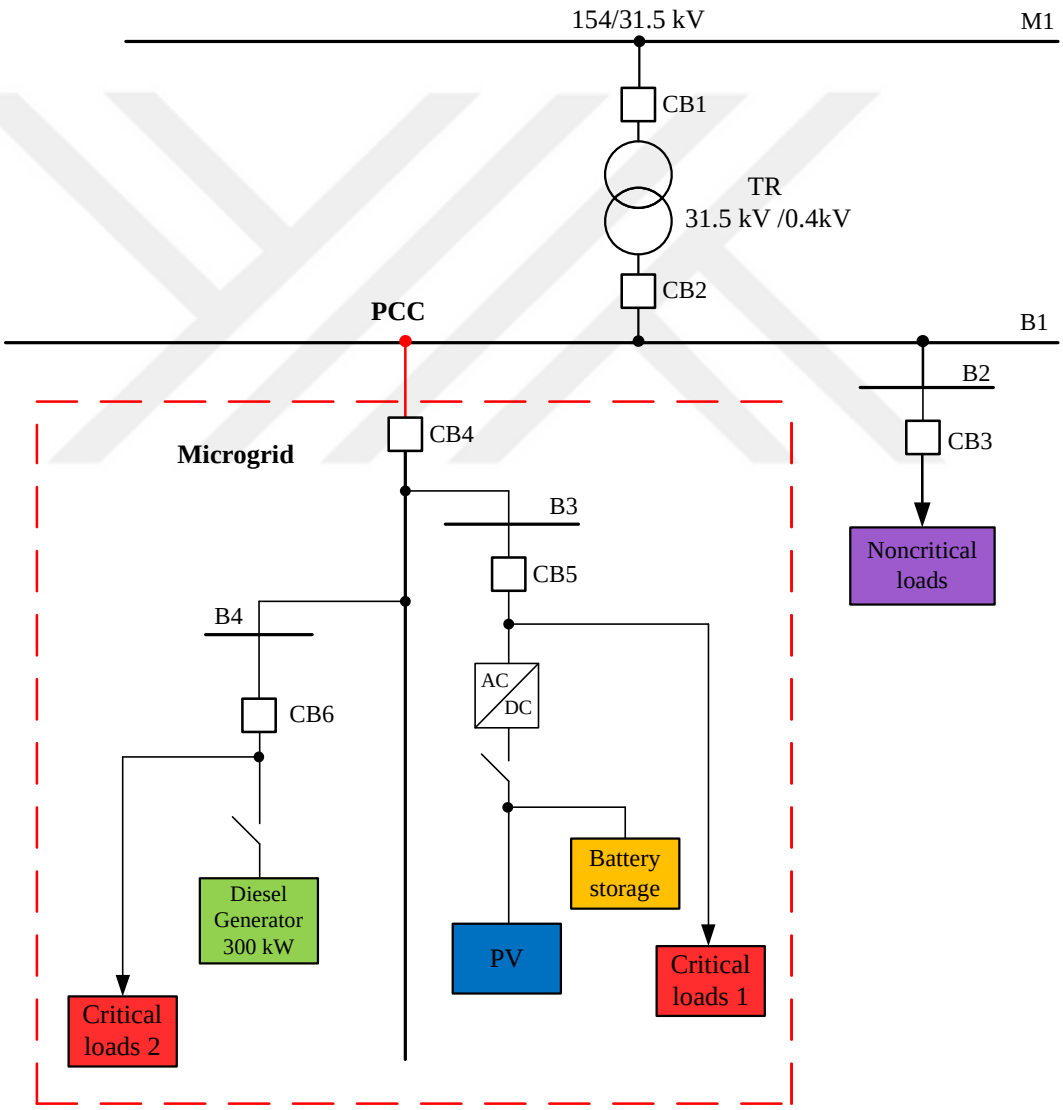

Figure 4.2. LV feeder of KBU Microgrid.

Technical specifications of PV panel FLM-310P-72, inverter XTM 3500-24 and battery MUTLU 6OpzS-600 are given in the Tables 4.3, 4.4 and 4.5 respectively.

Table 4.3. Technical specifications of PV panel FLM-310P-72.

Electrical Performance							
Model type	FLM-310P-72						
Power output	P_{max}	W	290	295	300	305	310
Power output tolerance	ΔP_{max} %						
Voltage at P_{max}	Vmpp	V	0-3	37.58	38.08	38.32	38.47
Current at P_{max}	Impp	A	7.81	7.85	7.88	7.96	8.06
Open circuit Voltage	Vdc	V	44.84	44.92	45.10	45.30	45.47
Short-circuit current	Idc	A	8.38	8.47	8.49	8.52	8.60

Table 4.4. Technical specification of inverter Xtender XTM 3500-24.

Nominal battery voltage	24 Vdc
Input voltage range	19 – 34Vdc
Continuous power at 25℃	3000 VA
Power 30 min. at 25℃	3500 VA
Power 5 sec. at 25 ℃	9 KV/A
Max. load	U_p to short- circuit
Max. Aymmetric load	U_p to P_{cont}
Load detection (stand-by)	2 to 25 W
Cos φ	0.1-1
Maximum efficiency	94%
Consumption OFF/stand-by/ON	1.4W/1.6W/12W
Output voltage	Pure sine wave 230Vac ($\pm$2%)/120 Vac
Output frequency	Adjustable 45 – 60 Hz $\pm$0.05%
Harmonic distortion	$< 2\%$
Overload and short- circuit protection	Automatic disconnection with 3-time restart attempt
Overheat protection	Warning before shut- with-off – with automatic restart
Battery charger	
Charge characteristic	6 steps: bulk – absorption – floating – equalization –reduced floating – periodic, absorption
Maximum charging current	90 A
Temperature compensation	With BTS-01 or BSP500/1200
Power factor correction (PFC)	EN 61000-3-2

Table 4.4. (continuing).

General data	
Input voltage range	150 to 265Vac /50 to 140Vac
Input frequency	45 to 65 Hz
Input current max. (transfer relay)/output current max.	50Aac /56Aac
Transfer time	< 15 ms
Multifunction contacts	2 independent contacts (potential free 3 points, 16A–250Vac /3–50 Vdc
Weight	21.2 Kg
Dimensions h/w/l[mm]	133/322/466
Protection index	IP20
Operating temperature range	-20 to 55℃
Relative humidity in operation	95 % without condensation
Ventilation	Forced from 55℃
Acoustic level	< 40 dB (without ventilation) / < 45 dB (with ventilation)
ISO Certification	9001:2008/14001:2004

Table 4.5. Technical specification of battery MUTLU 6OPzS-300.

U=1.83 V/Cell Discharge Current (A)

15 min	30 min	1 h	2 h	3 h	4 h	5 h	6 h	8 h	10 h
185	158	124	88.5	68	56.4	48	42.3	34.4	28.2

U=1.80V/Cell Discharge Current (A)

15 min	30 min	1 h	2 h	3 h	4 h	5 h	6 h	8 h	10 h
218	180	146	92	71	58	50	44	36	30

U=1.75 V/Cell Discharge Current (A)

15 min	30 min	1 h	2 h	3 h	4 h	5 h	6 h	8 h	10 h
220	207	155	100	76	62	53.5	46	36.8	31

U=1.70 V/Cell Discharge Current (A)

15 min	30 min	1 h	2 h	3 h	4 h	5 h	6 h	8 h	10 h
289	225	160	105	79	64	55	47	37	31.2

To provide the MG control in both grid-connected and islanded operation modes it is important to meet the balance between generation and demand of power. Once MG operates in the grid-connected mode, MG interchanges power with an interconnected grid to meet the balance. If MG operates in the islanded mode, MG should meet the

balance for the local supply and demand using the decrease in generation or load shedding. Therefore, firstly we need to investigate loads for our research object. The distribution of loads TR-6 are given below (Figure 4.3). The load for PV (critical loads-1) is highlighted by yellow, for generator (critical loads-2) is highlighted by blue and non-critical load is highlighted by black in the Figure 4.3.

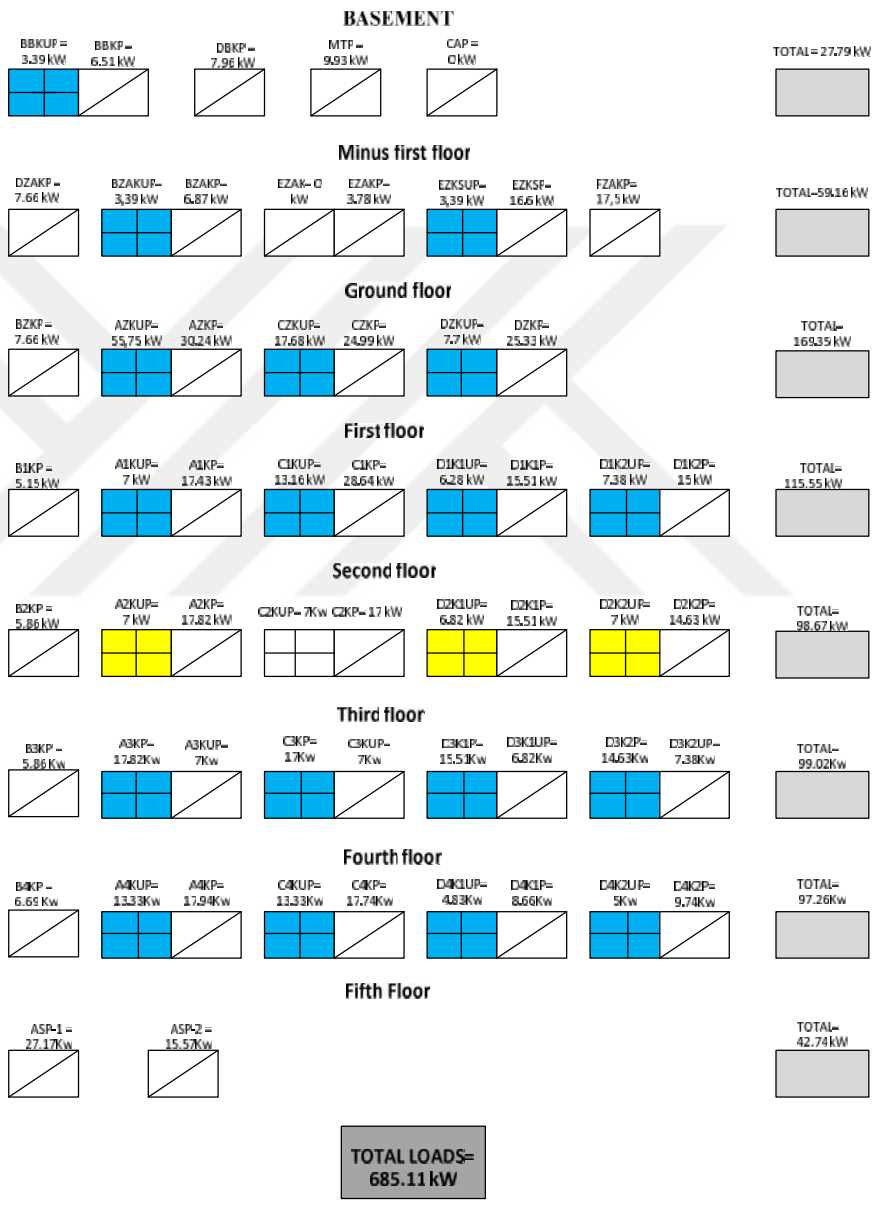

Figure 4.3. Loads distribution scheme of the building TR-6.

In the Figure 4.4 is dispatched DER and loads distribution of KBU MG.

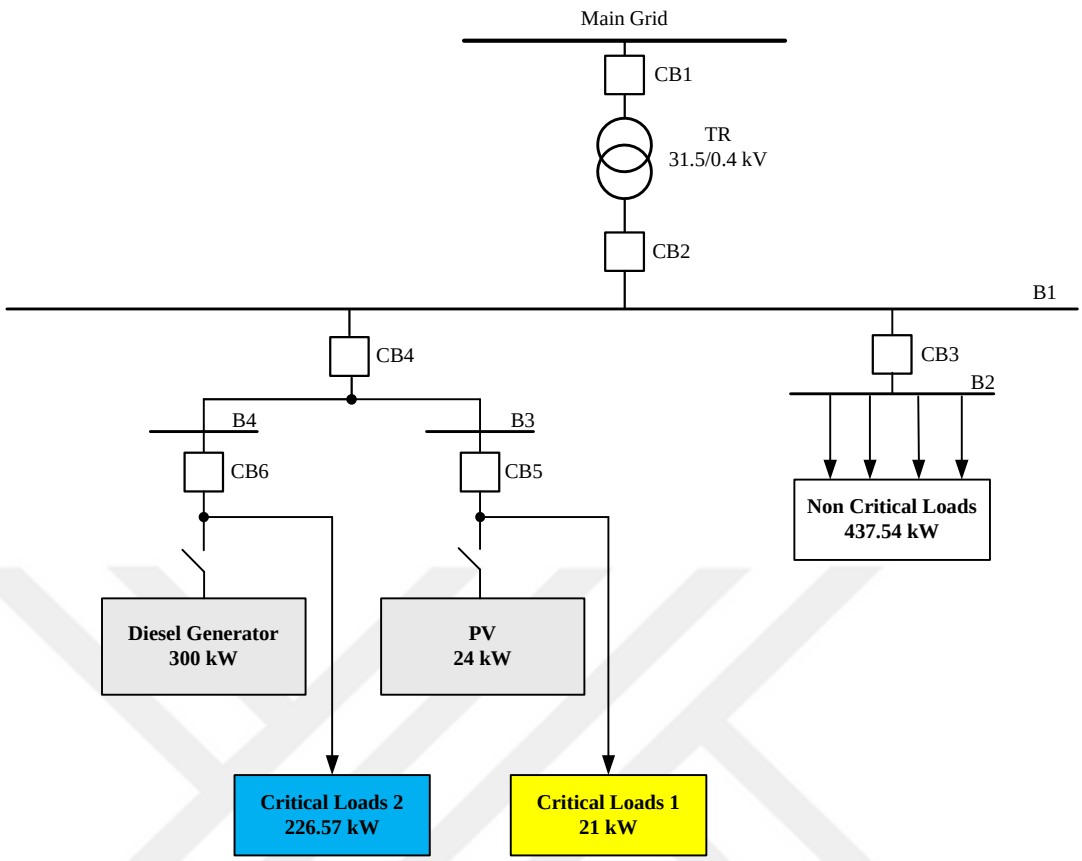

Figure 4.4. Critical and noncritical loads of KBU MG.

Detail of distributed energy resources and loads of KBU MG are given in the Table 4.6.

Table 4.6. Details of DER and Loads of KBU MG.

DER & Loads	Units number	Min. Power, kW	Max. Power, kW
PV	1	21	24
Generator	1	275	300
Loads 1 (critical) – PV	3	14.18	21
Loads 2 (critical) – Generator	20	216.4	226.57
Loads 3 (non-critical)	35	400	437.54
Total Loads		**630.58**	**685.11**

As we mentioned above, PV-panel FLM-310P-72 is applied for KBU MG system. This PV system consists of 4 strings. Each string has parallel-connected 20 modules and 16 modules. The main specifications of 20-module and 16-module of PV-panel which modeled on Simulink/Matlab are presented in the Figures 4.5 and 4.6.

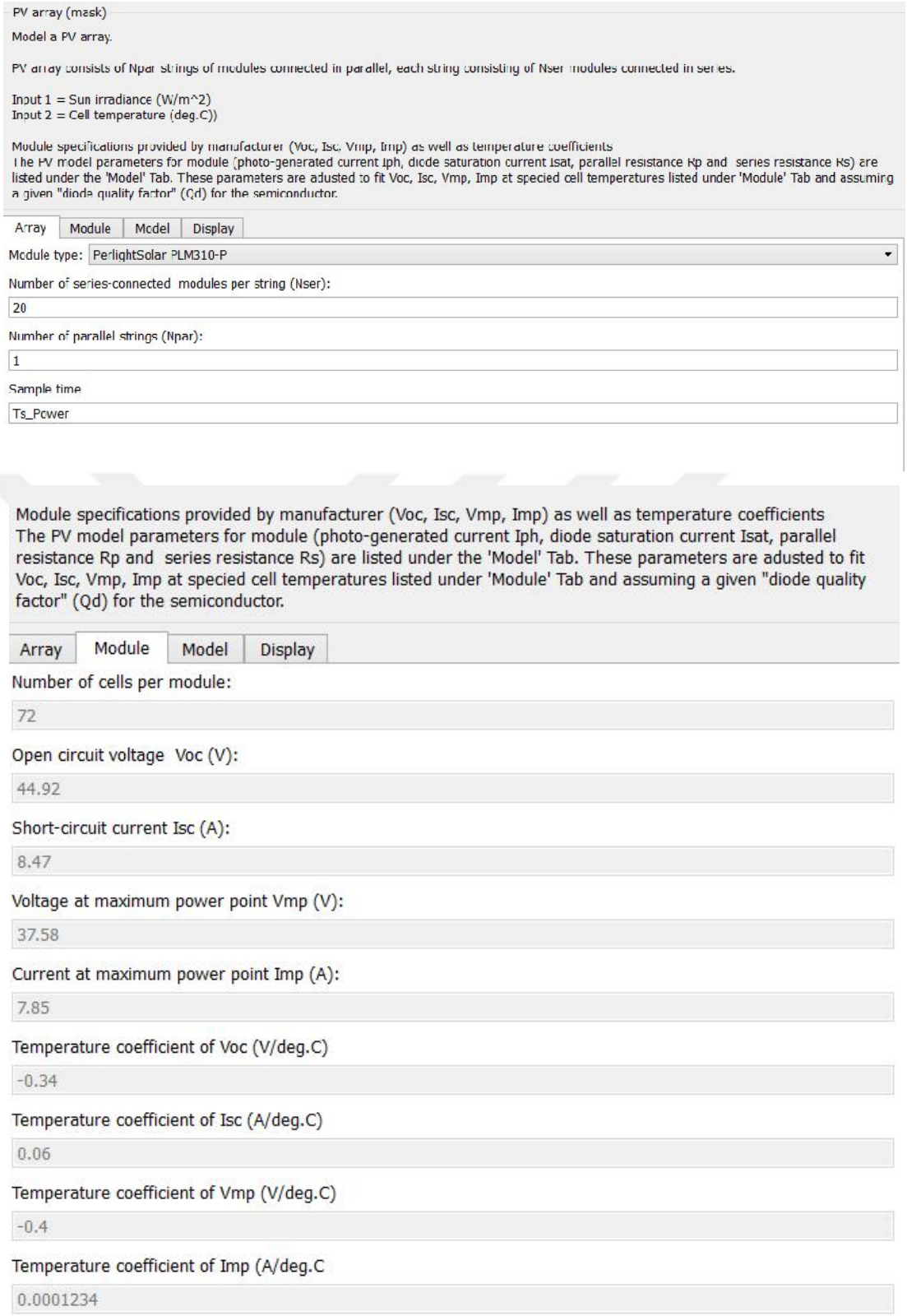

Figure 4.5. 20-module PV panel specifications on Simulink/Matlab.

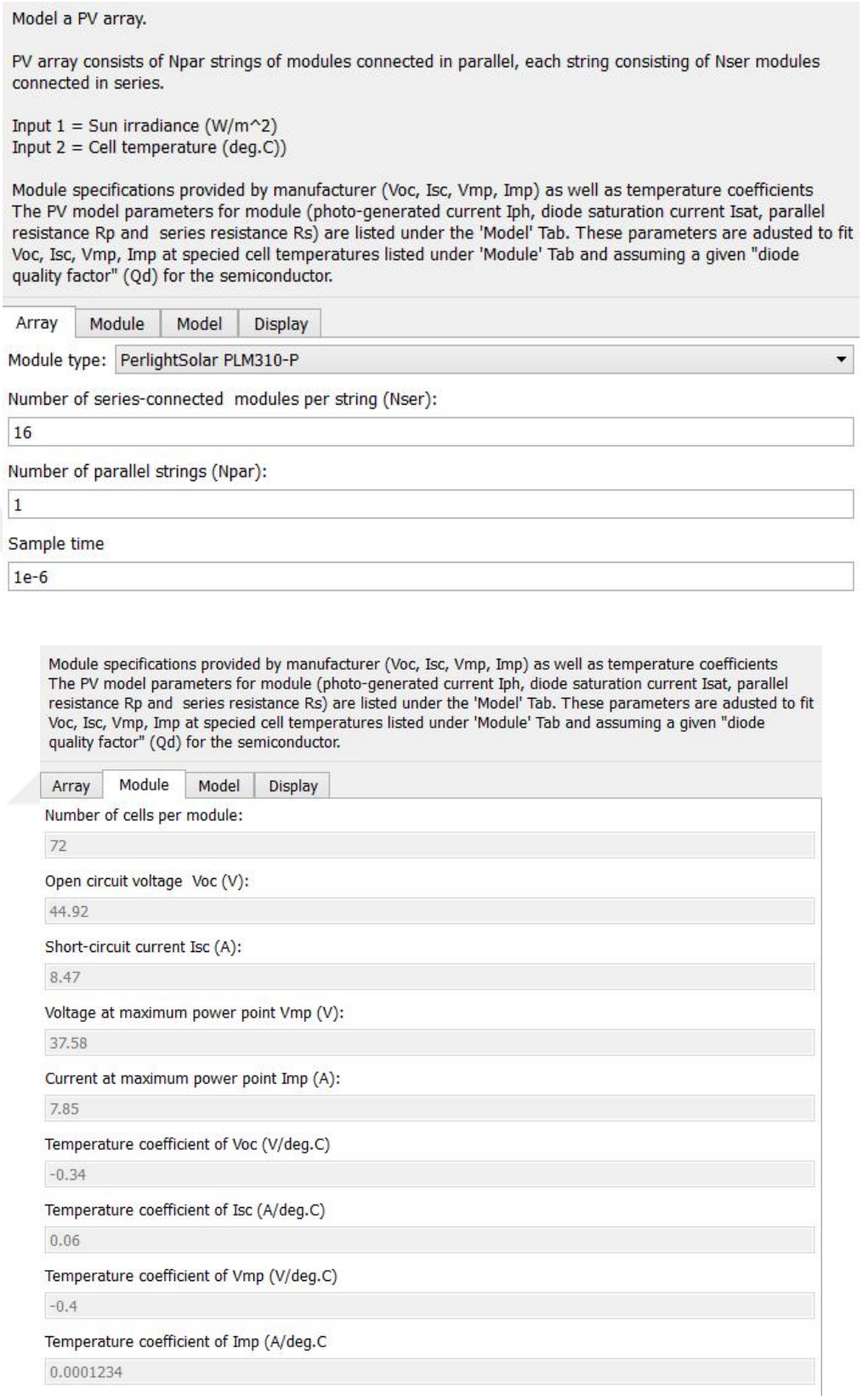

Figure 4.6. 16-module PV panel specifications on Simulink/Matlab.

In Figure 4.7 are shown I-V and P-V characteristics of 20-modules PV panel for various irradiance at fixed temperature (25°C).

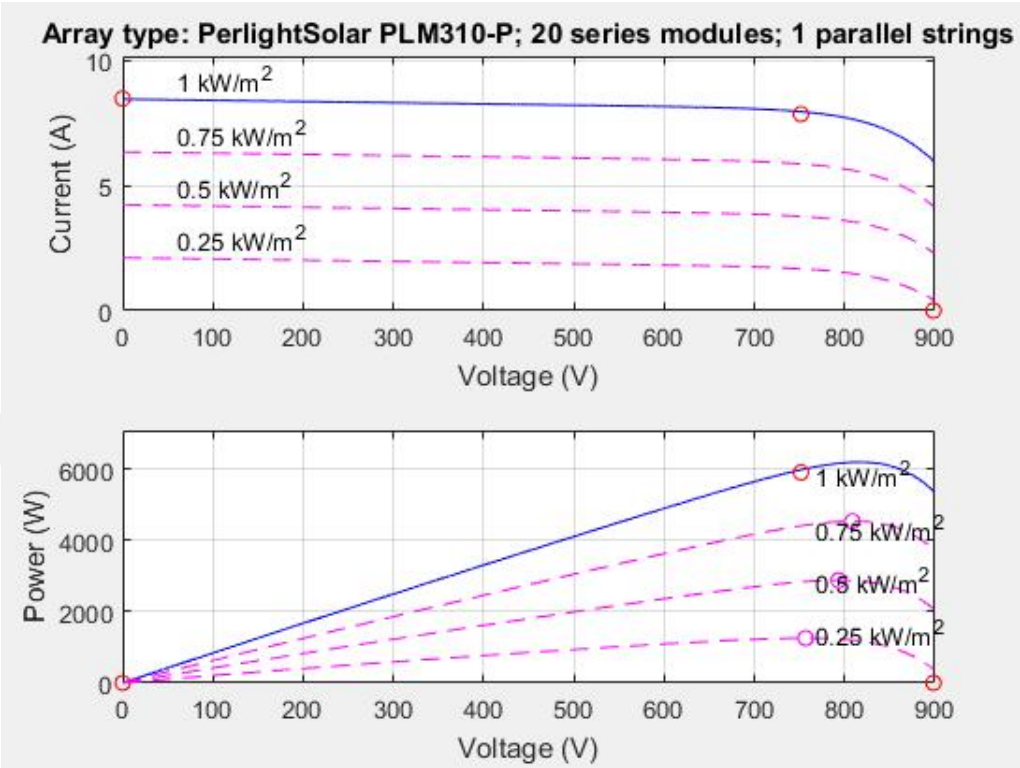

Figure 4.7. I-V and P-V characteristics of 20-module PV panel for various irradiance at constant temperature.

In Figure 4.8 are shown I-V and P-V characteristics of 20-modules PV panel for various temperature at fixed irradiance (1000 W/m^2). From these characteristics of PV module it is clear that the output power, current and voltage decreases by reducing irradiation. Once the temperature decreases, the output power and voltage increases marginally whereas the output current almost keeps constant.

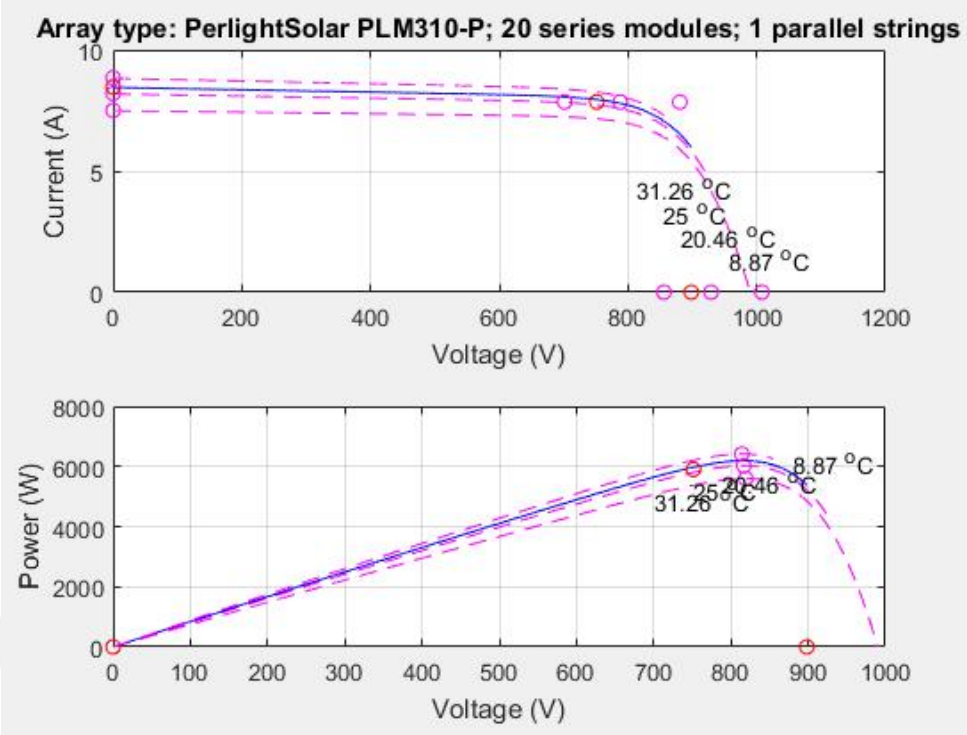

Figure 4.8. I-V and P-V characteristics of 20-module PV panel for various temperature at constant irradiance.

4.2. SIMULATION OF ISLANDED KBU MICROGRID ON SIMULINK/MATLAB

In islanded mode, DERs provide loads with necessary power energy and MG never connects to the main grid. Islanded or MG disconnected mode used in the following cases (Figure 4.9):

- If serious disturbances occur in main grid;
- To perform a maintenance;
- In case of long-term voltage dips;
- General faults following an event in the main grid.

Simulation of KBU MG in islanded mode implemented on MATLAB/Simulink for PV panel FLM-310P-72, Inverter Xtender XTM 3500-24 and battery MUTLU 6OpzS-600 which main specifications were given in Chapter 4.1.

Once we built KBU MG Simulation in island mode on MATLAB/Simulink it being the image as illustrated in Figure 4.10.

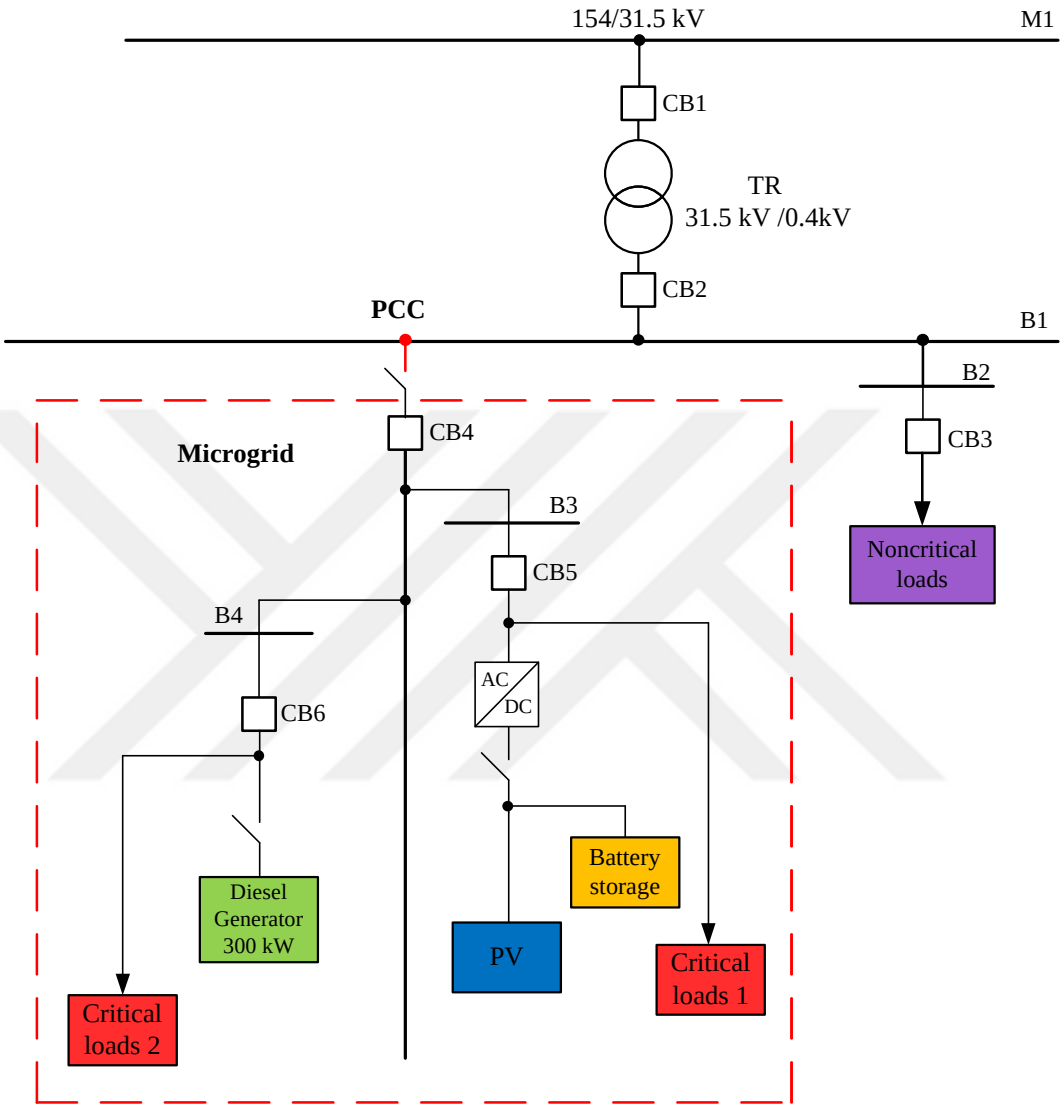

Figure 4.9. LV feeder of KBU MG disconnected to main grid.

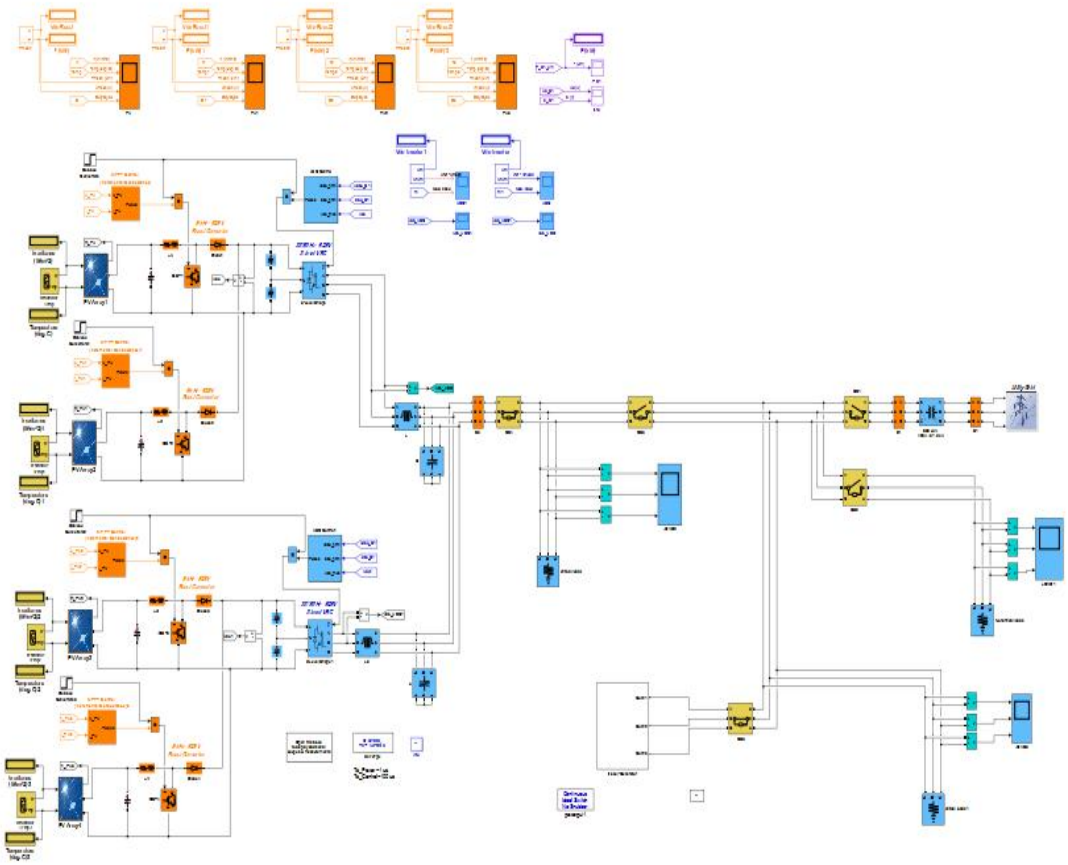

Figure 4.10. Simulation of KBU MG in island mode on MATLAB/Simulink.

If in the main grid occurs faults or power outages, MG is disconnected from distribution network, i.e. main grid at 0.1 sec. and non-critical loads cut-off from power system (Figure 4.11). In this case we have local power energy for critical loads 1 supplied by PV (Figure 4.12) and for critical loads 2 supplied by Generator (Figure 4.13).

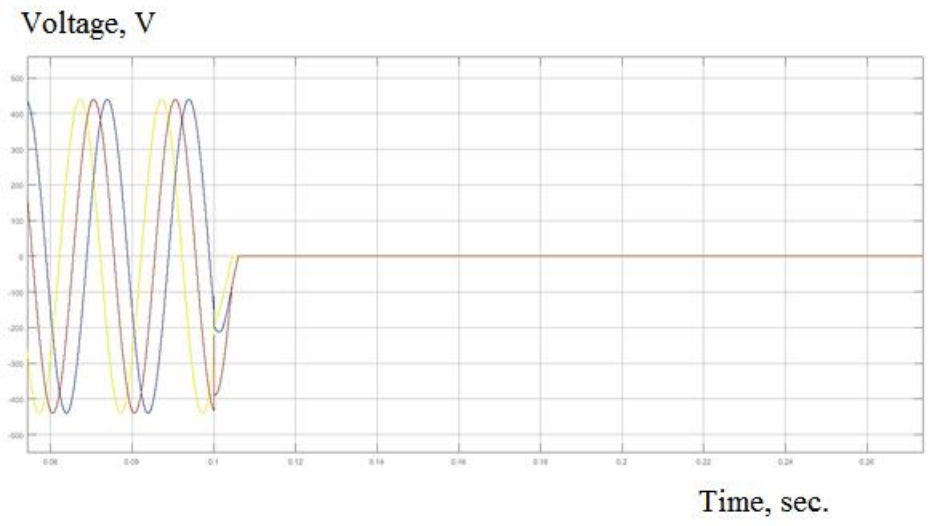

Figure 4.11. Voltage characteristic of main grid in MG islanded mode.

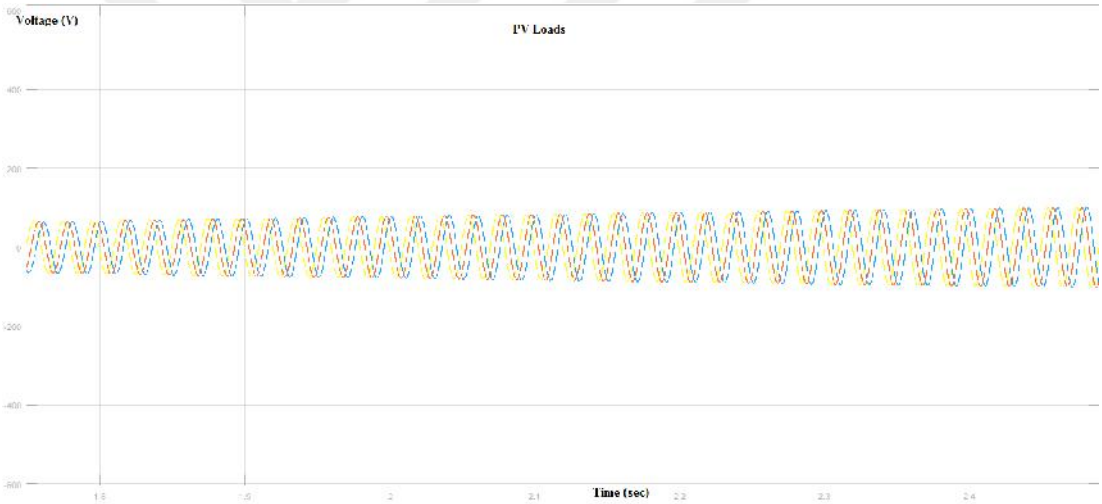

Figure 4.12. Voltage characteristics of PV in MG islanded mode.

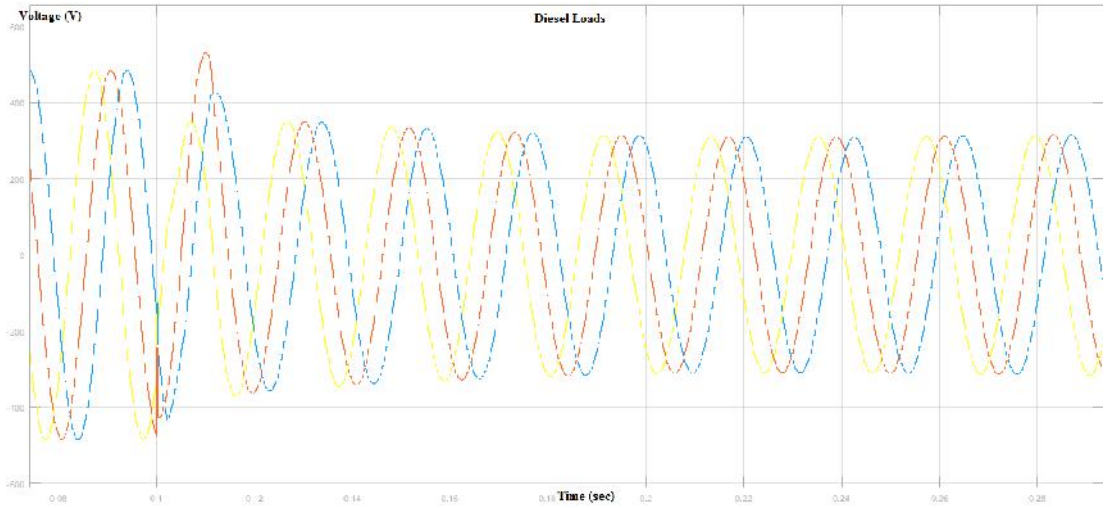

Figure 4.13. Voltage characteristics of generator loads in MG islanded mode.

4.3. SIMULATION OF GRID-CONNECTED MICROGRID

Simulation for LV feeder of KBU Microgrid in connected mode (Figure 4.14) on Simulink/Matlab is illustrated in Figure 4.15. The events that occur on the feeder suppling MG side and events that occur on the MG disconnecting side are same. The reason of this way is one basic power supplied from main grid.

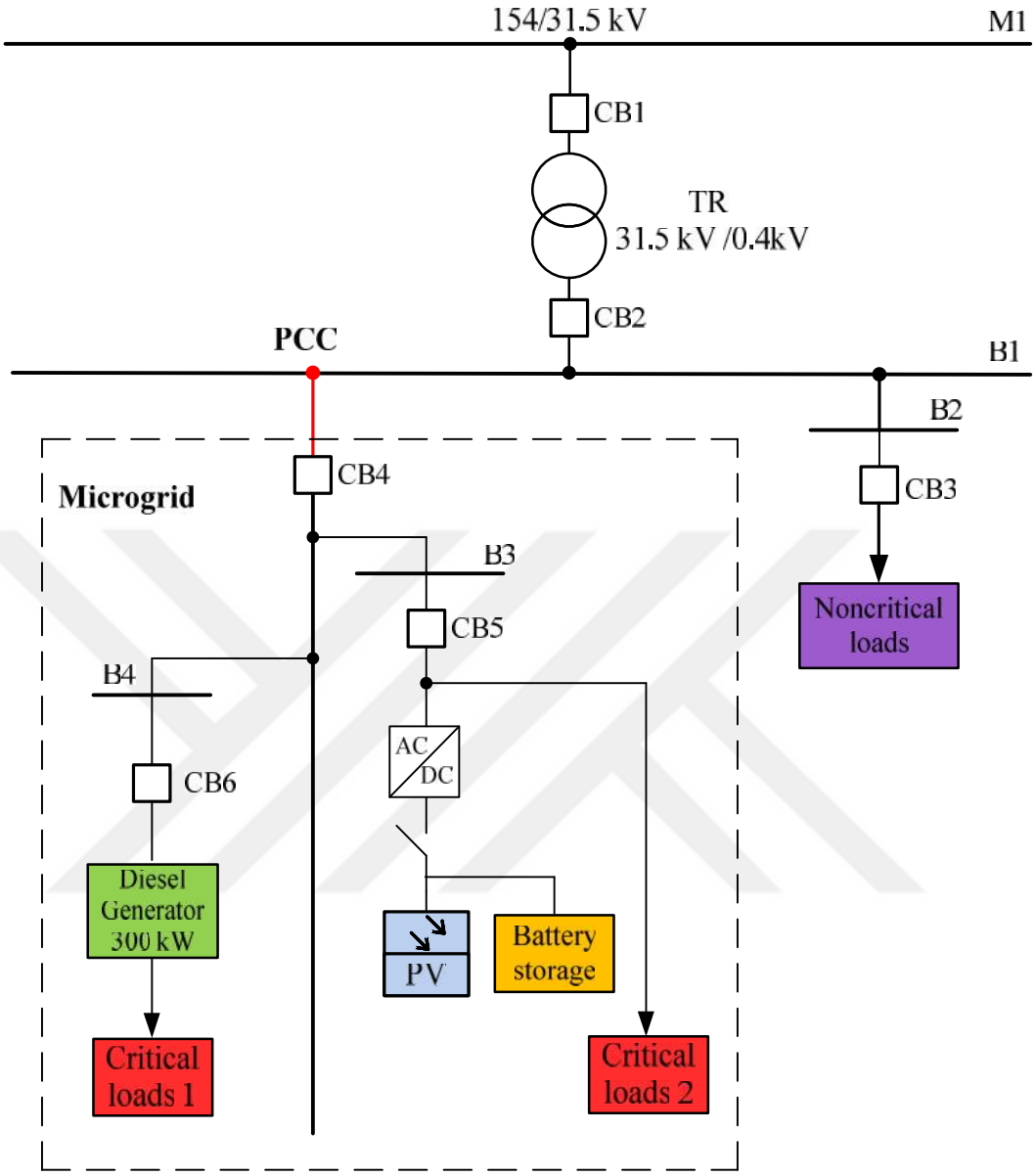

Figure 4.14. LV feeder of KBU Microgrid connected mode.

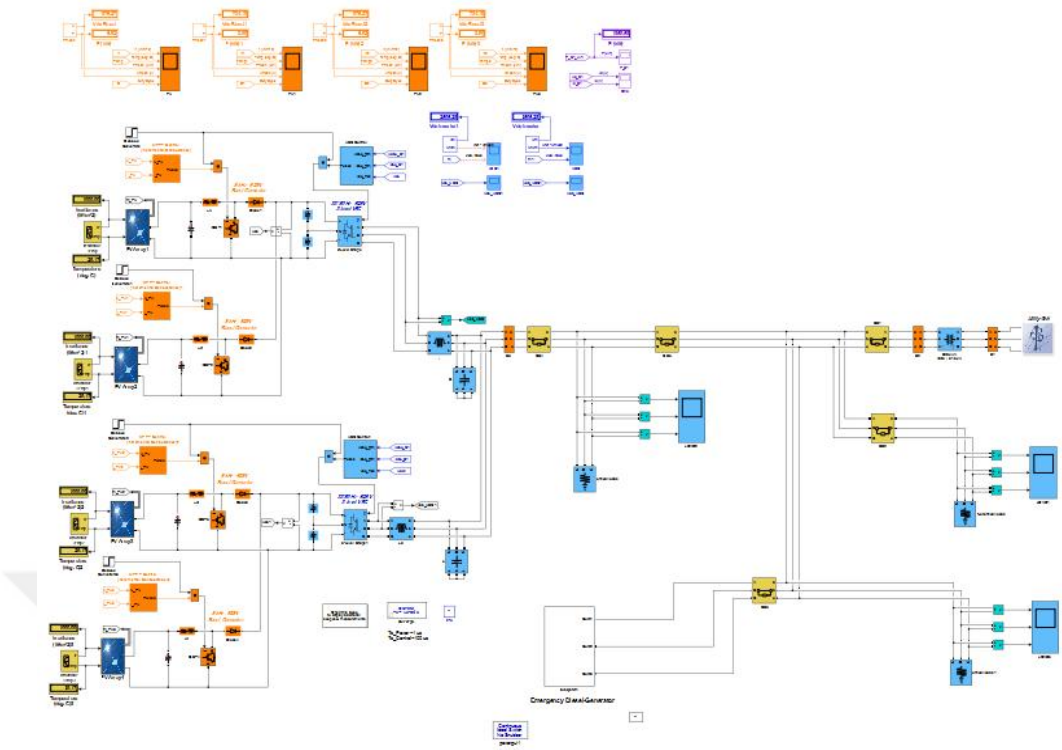

Figure 4.15. Simulation/on MATLAB of KBU Microgrid in grid connected mode.

Irradiance, temperature, mean power, output voltage and Duty Cycle characteristics of PV panel in grid connected mode are shown in Figure 4.16.

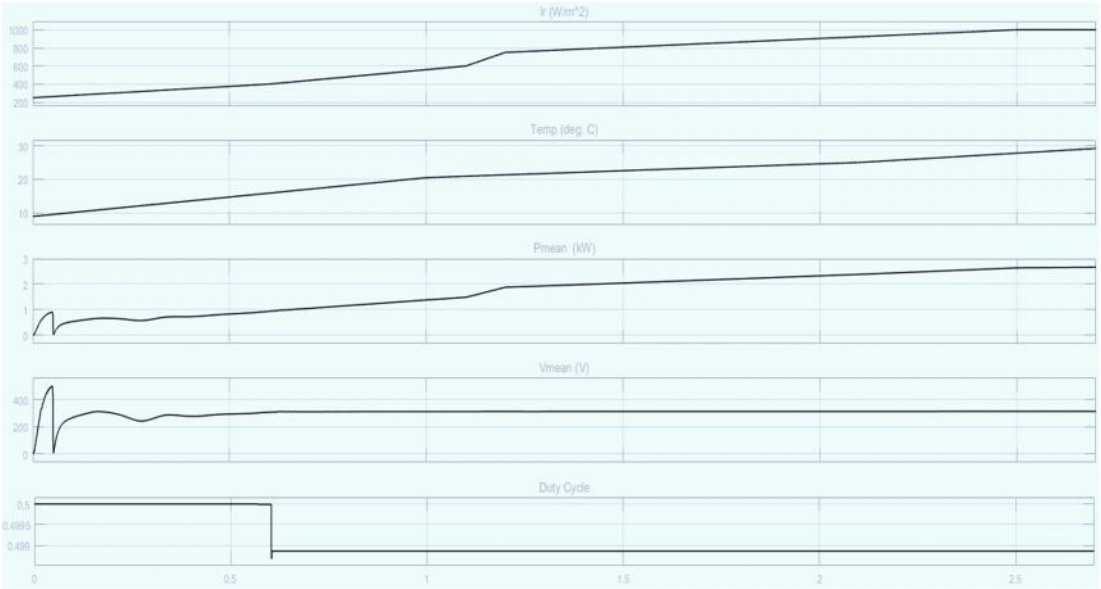

Figure 4.16. Irradiance, temperature, mean power, voltage and Duty Cycle of PV panel in grid connected mode.

Variations of voltage and current of 20-cell PV module are illustrated in Figure 4.17.

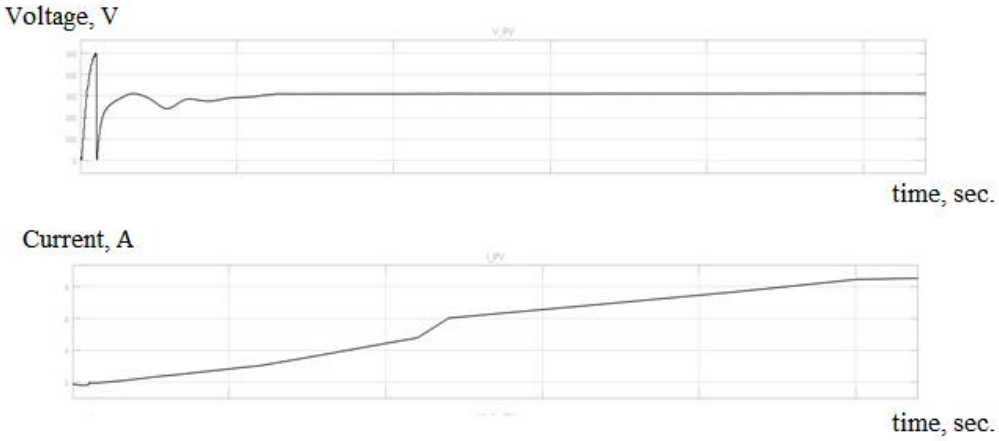

Figure 4.17. Voltage and current variations of 20-cell PV module.

In MG connected mode operation PV and generator sources are not generating power. In grid connected mode MG becomes as load or power energy source that control by main grid, and it is not required to regulate voltage at PCC. Similar to power system in this mode the distributed generations are controlled to generate active and reactive power. Therefore the purpose of the DG is to control the output real power and reactive power. The balance between generation and demand, as well as the control of voltage and frequency parameters are supported by main grid. Output voltage of generator and PV panel in MG connected mode operation are shown in Figures 4.18 and 4.19 we see that power supplied for critical loads of generator and PV panel are the same as power supplied by main grid for non-critical loads in Figure 4.20.

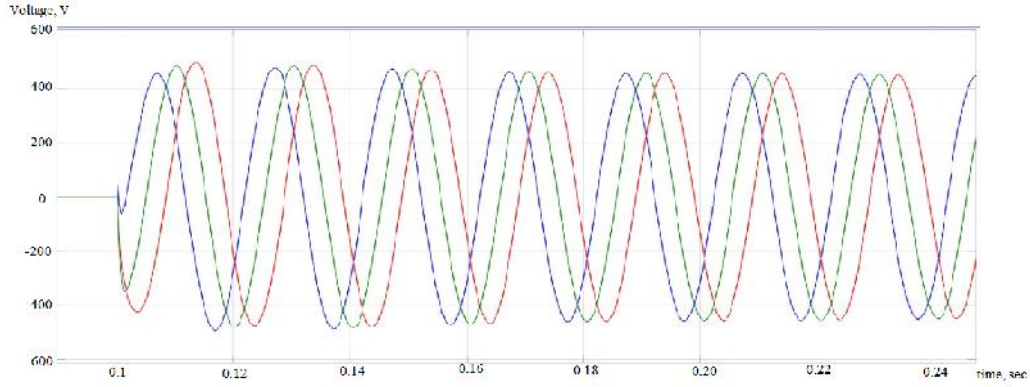

Figure 4.18. Output voltage characteristic of generator in MG connected mode.

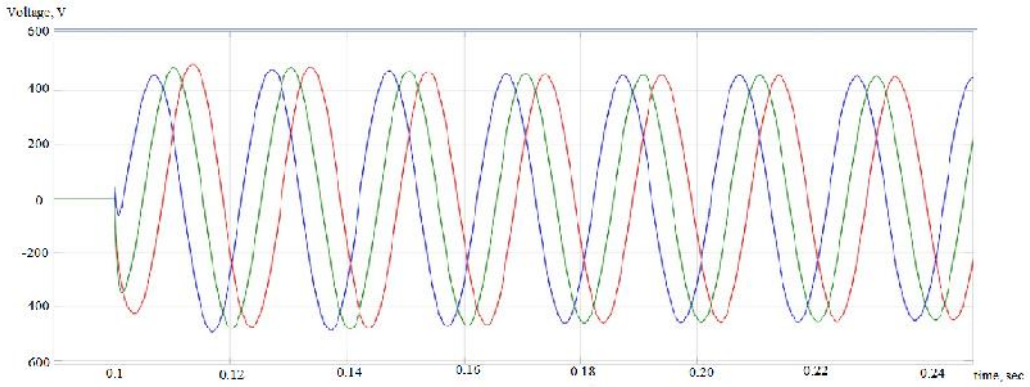

Figure 4.19. Output voltage characteristic of PV panel in MG connected mode.

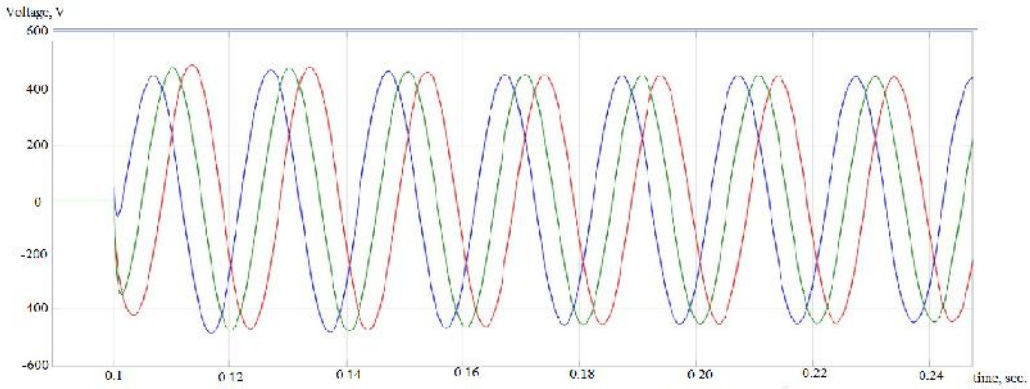

Figure 4.20. Output voltage supplied by main grid.

4.4. CONCLUSION

Microgrid is a basic element and a key component of smart grid. Microgrids are intended to improve energy efficiency, reliability of energy and power generation system and reduce carbon dioxide emissions. Microgrid is an aggregation of loads, through which, micro-sources operate like a stand-alone process generating both electricity and heat.

However with high penetration of distributed energy resources to power system there is main problem is how to integrate distributed energy resources and storage units to existing distribution networks.

In this work we considered types and technologies of distributed energy resources which are a new approach in power system, particularly in microgrid.

Microgrid can be operated in two modes – islanded and grid connected to the main grid and control strategy of MG depends on the mode of its operation. There are primary, secondary and tertiary control levels of MG hierarchical control.

In this graduation thesis are considered islanded and grid-connected operation modes of Karabuk University Microgrid (KBU MG) at case study of one Karabuk University substation. Simulation models for each modes of MG are developed on Matlab/Simulink.

KBU MG simulation case studies were carried out on three-phase, 3-bus, 0.4 kV grid disconnected and grid connected operation modes including load sharing.

The simulation results of KBU MG operation modes demonstrate that control of distributed energy resources (DERs) and coordination of loads sharing is an effective way to provide the reliability of microgrids.

REFERENCES

1. Ackermann, T., Andersson, G., and Söder, L., "Distributed generation: a definition," ***Electric power systems research***, vol. 57, pp. 195-204, (2001).

2. Lasseter, R. H., "Microgrids," in ***Power Engineering Society Winter Meeting, IEEE***, pp. 305-308 , (2002).

3. Lasseter, R., Abbas A., Marnay, C. , Stevens, J., Dagle, J. , Guttromson, R., *et al.*, "Integration of Distributed Energy Resources: ***The CERTS Microgrid Concept California Energy Commission,"*** *P500-03 F*, vol. 89, (2003).

4. Hatziargyriou, N., Asano, H., Iravani, R. and Marnay, C. , "Microgrids," ***IEEE power and energy magazine***, vol. 5, pp. 78-94, (2007).

5. Chowdhury, S. and Crossley, P., ***Microgrids and active distribution networks***: The Institution of Engineering and Technology, (2009).

6. Jiayi, H., Chuanwen, J., and Rong, X., "A review on distributed energy resources and MicroGrid," ***Renewable and Sustainable Energy Reviews,*** vol. 12, pp. 2472-2483, (2008).

7. Barnes, M. , Kondoh, J., Asano, H. , Oyarzabal, J., Ventakaramanan, G., asseter, R., ***et al.***, "Real-world microgrids-an overview," in ***System of Systems Engineering, IEEE International Conference on***, pp. 1-8, (2007).

8. Martin-Martínez, F., Sánchez-Miralles, A. and Rivier, M., "A literature review of Microgrids: A functional layer based classification," ***Renewable and Sustainable Energy Reviews,*** vol. 62, pp. 1133-1153, (2016).

9. Olivares, D. E., Mehrizi-Sani, A. , Etemadi, A. H., Canizares, C. A. Iravani, R. , Kazerani, M. ,***et al***., "Trends in microgrid control," ***IEEE Transactions on smart grid,*** vol. 5, pp. 1905-1919, (2014).

10. Alibhai, Z., Gruver, W. A., Kotak, D. B., and Sabaz, D., "Distributed coordination of micro-grids using bilateral contracts," in ***Systems, Man and Cybernetics, IEEE International Conference on***, pp. 1990-1995, (2004).

11. Duffie, J. A., and Beckman, W. A., Solar Engineering of Thermal Processes, Second, **John Wiley & Sons, New York, USA**, (1991).

12. Katiraei, F. , Iravani, R., Hatziargyriou, N., and Dimeas, A., "Microgrids management," ***IEEE power and energy magazine***, vol. 6, (2008).

13. Strategy, A. "Low Carbon Buildings Programme: *Consultation," **DTI, June***, (2005).

14. Gastli, A. and Charabi, Y., "Solar electricity prospects in Oman using GIS-based solar radiation maps," ***Renewable and Sustainable Energy Reviews,*** vol. 14, pp. 790-797, (2010).

15. Amer, M. , Namaane, A., and M'sirdi, N., "Optimization of hybrid renewable energy systems (HRES) using PSO for cost reduction," ***Energy Procedia,*** vol. 42, pp. 318-327, (2013).

16. Mason, J., Fthenakis, V., Zweibel, K., Hansen, T. and Nikolakakis, T., "Coupling PV and CAES power plants to transform intermittent PV electricity into a dispatchable electricity source," ***Progress in Photovoltaics: Research and Applications***, vol. 16, pp. 649-668, (2008).

17. Lund, H., Nilsen, R. , Salomatova, O. , Skåre, D., and Riisem, E., "The History Highlight of Solar Sells [sic](Photovoltaic Cells). Norwegian University of Science and Technology," ed, (2008).

18. Mohanty, P. , and Muneer, T., "Smart design of stand-alone solar pv system for off grid electrification projects," in ***Mini-Grids for Rural Electrification of Developing Countries,*** ed: Springer, pp. 63-93, (2014).

19. Mohanty, P., Muneer, T., Gago, E. J., and Kotak, Y., "Solar Radiation Fundamentals and PV System Components," in ***Solar Photovoltaic System Applications,*** ed: Springer, pp. 7-47, (2016).

20. Holmes D. G., and Lipo, T. A., ***Pulse width modulation for power converters: principles and practice*** vol. 18: John Wiley & Sons, (2003).

21. Mariam, L., Basu, M., and Conlon, M. F., "A review of existing microgrid architectures," ***Journal of Engineering,*** vol., (2013).

22. Lai, L., ***Power system restructuring and deregulation: trading, performance and information technology*****:** John Wiley & Sons, (2001).

23. Soshinskaya, M., Crijns-Graus, W. H., Guerrero, J. M., and Vasquez, J. C. "Microgrids: Experiences, barriers and success factors," ***Renewable and Sustainable Energy Reviews,*** vol. 40, pp. 659-672, (2014).

24. Internet: Schwaegerl, C., Tao, L., Lopes, J. P., Madureira, A. Mancarella, P., Anastasiadis, A., *et al.*, "Report on the technical, social, economic, and environmental benefits provided by Microgrids on power system operation," **Advanced Architectures and Control Concepts for More Microgrids. http://www.microgrids.eu/documents/668. pdf**, (2009).

25. Zamora, R., and Srivastava, A. K., "Controls for microgrids with storage: Review, challenges, and research needs," ***Renewable and Sustainable Energy Reviews,*** vol. 14, pp. 2009-2018, (2010).

26. Wu. D. W. and Wang,R. Z., "Combined cooling, heating and power: A review", ***Progress in Energy and Combustion Science,*** vol.32, pp. 459–495, (2006).

27. Kosnik, L., "The potential for small scale hydropower development in the US," ***Energy Policy,*** vol. 38, pp. 5512-5519, (2010).

28. Balat, M. "Hydropower systems and hydropower potential in the European Union countries", ***Energy Sources, Part A,*** vol. 28, pp. 965-978, (2006).

29. Lang, M. H., Lins, K. V., and Miller, D. P., "Concentrated control, analyst following, and valuation: Do analysts matter most when investors are protected least?," ***Journal of Accounting Research,*** vol. 42, pp. 589-623, (2004).

30. Paish, O. "Small hydro power: technology and current status," ***Renewable and sustainable energy reviews,*** vol. 6, pp. 537-556, (2002).

31. Kroposki, B., Lasseter, R., Ise, T., Morozumi, S., Papatlianassiou, S., and Hatziargyriou, N., "Making microgrids work," ***IEEE power and energy magazine,*** vol. 6, (2008).

32. Internet: Teodorescu, R., "Industrial PhD course on Microgrids," **Microgrid Overview", Alborg University, http://www.et.aau.dk.**

33. Logenthiran, T., Srinivasan, D., and Wong, D., "Multi-agent coordination for DER in MicroGrid," in ***Sustainable Energy Technologies, ICSET , IEEE International Conference on,*** pp. 77-82, (2008).

34. Kumar, A., Sah, B. Deng, Y., He, X. , Bansal, R., and Kumar, P. "Autonomous hybrid renewable energy system optimization for minimum cost," (2015).

35. Hatziargyriou, N., Tsikalakis, A., Vlachogiannis, J., Papadogiannis, K., Kariniotakis, G., Lopes, J. *et al.*, "Microgrid central controller strategies and algorithms," ***National Technical University of Athens, Deliverable (DC1) of the MicroGrids EU Research Project (Contract Number: ENK5-CT-2002-00610), 24th February***, (2004).

36. Schwaegerl, C., and Tao, L., "Definition of future Microgrid scenarios and performance indices," ***Advanced Architectures and Control Concepts for More Microgrids, WPG DG1***, (2008).

37. Borup, U., Nielsen, B. V., and Blaabjerg, F., "Compensation of cable voltage drops and automatic identification of cable parameters in 400 Hz ground power units," ***IEEE Transactions on Industry Applications,*** vol. 40, pp. 1281-1286, (2004).

38. Takahashi, I. , and Su, G., "A 500 Hz power system-applications," ***in Industry Applications Society Annual Meeting, Conference Record of the 1989 IEEE***, pp. 996-1002 , (1989).

39. Chakraborty, S., Weiss, M. D., and Simoes, M. G., "Distributed intelligent energy management system for a single-phase high-frequency AC microgrid," ***IEEE Transactions on Industrial electronics,*** vol. 54, pp. 97-109, (2007).

40. Mizuguchi, K. , Muroyama, S., Kuwata, Y., and Ohashi, Y., "A new decentralized DC power system for telecommunications systems," in ***Telecommunications Energy Conference, INTELEC'90., 12th International,*** pp. 55-62, (1990).

41. Chan, C., "The state of the art of electric and hybrid vehicles," ***Proceedings of the IEEE***, vol. 90, pp. 247-275, (2002).

42. Ciezki, J. G., and Ashton, R. W., "Selection and stability issues associated with a navy shipboard DC zonal electric distribution system", ***IEEE Transactions on power delivery,*** vol. 15, pp. 665-669, (2000).

43. Salomonsson, D., and Sannino, A., "Low-voltage DC distribution system for commercial power systems with sensitive electronic loads," ***IEEE Transactions on Power Delivery,*** vol. 22, pp. 1620-1627, (2007).

44. Jiang, Z., and Yu, X., "Hybrid DC-and AC-linked microgrids: towards integration of distributed energy resources," in ***Energy 2030 Conference, 2008. ENERGY ,*** pp. 1-8, (2008).

45. Hirose, K., Takeda, T., and Fukui, A., "Field demonstration on multiple power quality supply system in Sendai, Japan," in ***Electrical Power Quality and Utilisation, 9th International Conference on***, pp. 1-6, (2007).

46. Logenthiran, T., and Srinivasan . D, "Multi-agent system for the operation of an integrated microgrid," *Journal of* ***Renewable and Sustainable Energy,*** vol. 4, p. 013116, (2012).

47. Hatziargyriou, N., Jenkins, N., Strbac, G., Lopes, J. P., Ruela, J., Engler, A. ***et al.,*** "Microgrids–large scale integration of microgeneration to low voltage grids," *CIGRE C6-309*, (2006).

48. Guerrero, J. M., Vasquez, J. C., Matas, J. , De Vicuña, L. G. and Castilla, M. "Hierarchical control of droop-controlled AC and DC microgrids—A general approach toward standardization," ***IEEE Transactions on Industrial Electronics,*** vol. 58, pp. 158-172, (2011).

49. Mehrizi-Sani, A. and Iravani, R., "Potential-function based control of a microgrid in islanded and grid-connected modes," ***IEEE Transactions on Power Systems,*** vol. 25, pp. 1883-1891, (2010).

50. Mahmoud, M. S., Rahman, M. S. U. and Fouad, M.-S., "Review of microgrid architectures–a system of systems perspective," ***IET Renewable Power Generation,*** vol. 9, pp. 1064-1078, (2015).

51. Lopes, J. P., Moreira, C. and Madureira, A., "Defining control strategies for microgrids islanded operation," ***IEEE Transactions on power systems,*** vol. 21, pp. 916-924, (2006).

52. Ilic, M. and Liu, S., ***Hierarchical power systems control: its value in a changing industry***: Springer Science & Business Media, (2012).

53. Bidram, A. and Davoud, A., "Hierarchical Structure of Microgrids Control System", **IEEE Transactions on Smart Grid**, vol. 3, pp. 1963-1976, (2012).

54. Ryan, M. J., Brumsickle, W. E. and Lorenz, R. D., "Control topology options for single-phase UPS inverters," ***IEEE Transactions on Industry Applications,*** vol. 33, pp. 493-501, (1997).

55. Escobar, G., Mattavelli, P., Stankovic, A. and Leyva, J., "An adaptive control for UPS to compensate unbalance and harmonic distortion using a combined capacitor/load current approach," in ***Industrial Electronics Society, IECON'03. The 29th Annual Conference of the IEEE***, pp. 378-382, (2003).

56. Escobar, G., Mattavelli, P., Stankovic, A. M., Valdez, A. A. and Leyva-Ramos, J., "An adaptive control for UPS to compensate unbalance and harmonic distortion using a combined capacitor/load current sensing," ***IEEE Transactions on Industrial Electronics,*** vol. 54, pp. 839-847, (2007).

57. Prodanovic, M. and Green, T. C., "High-quality power generation through distributed control of a power park microgrid," ***IEEE Transactions on Industrial Electronics,*** vol. 53, pp. 1471-1482, (2006).

58. Li, Y. W., Vilathgamuwa, D. M. and Loh, P. C., "A grid-interfacing power quality compensator for three-phase three-wire microgrid applications," in ***Power Electronics Specialists Conference, PESC , IEEE 35th Annual,*** pp. 2011-2017, (2004)

59. Chandorkar, M. C. , Divan, D. M. and Adapa, R. , "Control of parallel connected inverters in standalone ac supply systems," ***IEEE Transactions on Industry Applications,*** vol. 29, pp. 136-143, (1993).

60. Katiraei, F. and Iravani, M. R. , "Power management strategies for a microgrid with multiple distributed generation units," ***IEEE transactions on power systems,*** vol. 21, pp. 1821-1831, (2006).

61. Sao , C. K. and Lehn, P. W. , "Autonomous load sharing of voltage source converters," ***IEEE Transactions on Power Delivery,*** vol. 20, pp. 1009-1016, (2005).

62. Sao, C. K. and Lehn, P. W. , "Control and power management of converter fed microgrids," ***IEEE Transactions on Power Systems,*** vol. 23, pp. 1088-1098, (2008).

63. Vasquez, J. C. , Guerrero, J. M. , Luna, A. , Rodríguez, P. and Teodorescu, R., "Adaptive droop control applied to voltage-source inverters operating in grid-connected and islanded modes," ***IEEE Transactions on Industrial Electronics,*** vol. 56, pp. 4088-4096, (2009).

64. Li , Y. and Li, Y. W. , "Power management of inverter interfaced autonomous microgrid based on virtual frequency-voltage frame," ***IEEE Transactions on Smart Grid,*** vol. 2, pp. 30-40, (2011).

65. Guerrero, J. M. , Hang, L. and Uceda, J. , "Control of distributed uninterruptible power supply systems," ***IEEE Transactions on Industrial Electronics,*** vol. 55, pp. 2845-2859, (2008).

66. Rokrok , E. and Golshan, M. , "Adaptive voltage droop scheme for voltage source converters in an islanded multibus microgrid," ***IET generation, transmission & distribution,*** vol. 4, pp. 562-578, (2010).

67. Tuladhar, A. , Jin, H. , Unger, T. and Mauch, K. , "Control of parallel inverters in distributed AC power systems with consideration of line impedance effect," ***IEEE Transactions on Industry Applications,*** vol. 36, pp. 131-138, (2000).

68. Borup, U. , Blaabjerg, F. and Enjeti, P. N. , "Sharing of nonlinear load in parallel-connected three-phase converters," ***IEEE Transactions on Industry Applications,*** vol. 37, pp. 1817-1823, (2001).

69. Zhong, Q.-C. , "Harmonic droop controller to reduce the voltage harmonics of inverters," ***IEEE Transactions on Industrial Electronics,*** vol. 60, pp. 936-945, (2013).

70. Marinescu , B. and Bourles, H. , "Robust predictive control for the flexible coordinated secondary voltage control of large-scale power systems," ***IEEE Transactions on Power Systems,*** vol. 14, pp. 1262-1268, (1999).

71. Yazdani , A. and Iravani, R. , "A unified dynamic model and control for the voltage-sourced converter under unbalanced grid conditions," ***IEEE Transactions on Power delivery,*** vol. 21, pp. 1620-1629, (2006).

72. Vanthournout, K. , De Brabandere, K. , Haesen, E. , Van den Keybus, J., Deconinck, G. and Belmans, R. , "Agora: Distributed tertiary control of distributed resources," in ***Proc. 15th Power Systems Computation Conf,*** pp. 1-7, (2005).

73. Pantoja , A. and Quijano, N. , "A population dynamics approach for the dispatch of distributed generators," ***IEEE Transactions on Industrial Electronics,*** vol. 58, pp. 4559-4567, (2011).

74. El-Khattam, W and Salama, M.M, "Distribution generation technologies, definitions and benefits", ***Electric Power Systems Research***, 71(2), 119-128, (2004).

RESUME

Hesham Ahmed ALMGARBJ was born in Tripoli (Libya) in 1972 and he graduated first and elementary education in this city. He completed high school education in Al-khoms High School, after that, he started undergraduate program in Zleiten the Higher Institute of Preparing Instructors Department of Electronics Engineering in 1993. From 2014 until 2017 he graduated master science education at Karabuk University Department of Electric Electronics Engineering.

CONTACT INFORMATION

Address: Al-khoms (Libya)

E-mail: hhhgarbigee@yahoo.com; hhhgarbige@gmail.com