STABILITY ANALYSIS OF NEURAL NETWORKS WITH PIECEWISE CONSTANT ARGUMENT

A THESIS SUBMITTED TO
THE GRADUATE SCHOOL OF NATURAL AND APPLIED SCIENCES
OF
MIDDLE EAST TECHNICAL UNIVERSITY

BY

MELTEM KARACAÖREN

IN PARTIAL FULFILLMENT OF THE REQUIREMENTS
FOR
THE DEGREE OF DOCTOR OF PHILOSOPHY
IN
MATHEMATICS

JANUARY 2017

Approval of the thesis:

STABILITY ANALYSIS OF NEURAL NETWORKS WITH PIECEWISE CONSTANT ARGUMENT

submitted by **MELTEM KARACAÖREN** in partial fulfillment of the requirements for the degree of **Doctor of Philosophy in Mathematics Department, Middle East Technical University** by,

Prof. Dr. Gülbin Dural Ünver _____
Dean, Graduate School of **Natural and Applied Sciences**

Prof. Dr. Mustafa Korkmaz _____
Head of Department, **Mathematics**

Prof. Dr. Marat Akhmet _____
Supervisor, **Department of Mathematics, METU**

Examining Committee Members:

Assoc. Prof. Dr. İsmail Rafatov
Department of Physics, METU _____

Prof. Dr. Marat Akhmet
Department of Mathematics, METU _____

Assoc. Prof. Dr. Kostyantyn Zheltukhin
Department of Mathematics, METU _____

Assoc. Prof. Dr. Fatma Karakoç
Department of Mathematics, Ankara University _____

Assoc. Prof. Dr. Mehmet Onur Fen
Basic Sciences Unit, TED University _____

Date: _____

I hereby declare that all information in this document has been obtained and presented in accordance with academic rules and ethical conduct. I also declare that, as required by these rules and conduct, I have fully cited and referenced all material and results that are not original to this work.

Name, Last Name: MELTEM KARACAÖREN

Signature :

ABSTRACT

STABILITY ANALYSIS OF NEURAL NETWORKS WITH PIECEWISE CONSTANT ARGUMENT

Karacaören, Meltem
Ph.D., Department of Mathematics
Supervisor : Prof. Dr. Marat Akhmet

January 2017, 90 pages

Last several decades, an immense attention has been paid to the construction and analysis of neural networks since it is related to the brain activity. One of the most important neural networks is Hopfield neural network. Since it is obtained from the direct modeling of neuron activity, the results of the research have effective consequences for the modern science. Dynamical analysis of Hopfield neural networks concerns to the method of qualitative theory of differential equations. In particular, it relates to the existence and stability of oscillatory solutions, equilibrium, periodic and almost periodic solutions. Due to the significance of the Hopfield neural networks, one must modernize the models to satisfy the present and potential applications in neuroscience and other fields of the modern research. This is why in the present thesis, we have developed the Hopfield's model by inserting piecewise constant argument of generalized type which is started to be considered in the theory of differential equations several years ago in 2005. The new models contain piecewise constant argument and constant delays. We investigate the sufficient conditions for existence and uniqueness of solutions, global exponential stability of equilibrium points for these neural networks. By means of Lyapunov functionals, the conditions for stability and linear matrix inequality method have been obtained.

Keywords: Hopfield neural network, stability, piecewise constant argument, delay, linear matrix inequality

ÖZ

PARÇALI SABİT ARGÜMANLI SİNİR AĞLARININ KARARLILIK ANALİZİ

Karacaören, Meltem
Doktora, Matematik Bölümü
Tez Yöneticisi : Prof. Dr. Marat Akhmet

Ocak 2017 , 90 sayfa

Son on yılda, beyin faaliyetiyle ilişkili olduğu için sinir ağlarının modellenmesi ve analizine büyük önem verilmiştir. En önemli sinir ağlarından biri Hopfield sinir ağıdır. Nöronların etkinliklerinin doğrudan modellenmesinden elde edildiğinden, araştırmanın sonuçlarının modern bilim için etkili sonuçları vardır. Hopfield sinir ağlarının dinamik analizi, diferensiyel denklemlerin nitel teorisi yöntemiyle yani özellikle bu ağların salınımlı çözümlerinin, denge noktasının ve periyodik çözümlerinin varlığı ve kararlılığı ile ilgilidir. Sinirbiliminin ve modern araştırmanın diğer alanlarındaki mevcut ve potansiyel uygulamaların seviyesine erişebilmek için Hopfield modellerinin modernize edilmesi gereklidir. Bu nedenle, bu tezde, sabit bir gecikme terimi ve 2005 yılında yani birkaç yıl önce diferensiyel denklemler teorisinde göz önüne alınmaya başlanılan genelleştirilmiş tipteki parçalı sabit argüman eklenerek, Hopfield modeli geliştirilmiştir. Bu sinir ağları için denge noktalarının küresel üstel kararlılığı ve çözümlerin varlığı ve tekliği için yeterli koşulları araştırılmıştır. Lyapunov fonksiyonelleri ve doğrusal matris eşitsizliği yöntemi ile kararlılık için gerekli koşullar elde edilmiştir.

Anahtar Kelimeler: Hopfield sinir ağları,kararlılık, parçalı sabit argüman, gecikme, lineer matris eşitsizliği

To My Mother

ACKNOWLEDGMENTS

Firstly, I would like to express my sincere gratitude to my advisor Prof. Dr. Marat Akhmet for the continuous support of my Ph.D study and related research, for his patience, motivation, and immense knowledge. His guidance helped me in all the time of research and writing of this thesis. I could not have imagined having a better advisor and mentor for my Ph.D study.

Besides my advisor, I would like to thank the rest of my thesis committee, Assoc. Prof. Dr. İsmail Rafatov, Assoc. Prof. Dr. Konstantyn Zheltukhin, Assoc. Prof. Dr. Fatma Karakoç and Assoc. Prof. Dr. Mehmet Onur Fen for their insightful comments and encouragement. I extend my gratitude to all members of the Mathematics Department of Middle East Technical University.

I express my sincere thanks to the Scientific and Technological Research Council of Turkey (TÜBİTAK) for the scholarship (2211). Also I would like to extend my sincerest thanks to my work friends at TÜBİTAK. Especially, Vuslat Sabah and Burçin Alparslan deserve my hearty thanks not only for their constant support and encouragement but also their friendships.

I would like to express my greatest admiration to my mother Nezahat Alişen, my father Metin Alişen, and my brother Cem Alişen: without their support, this thesis could not be realized. My heart felt regard goes to my mother-in-law İlknur Karacaören. I am grateful to my mom and mother-in-law. Since Ege's birth, they have been especially supportive. I could not overcome this process without you. Again and again, my endless thanks go to both of you.

Moreover, I would like to express my gratitude to my dear friend, Duygu Akkoca for helping me get through the difficult times, and for all the emotional support, entertainment, and caring she provided.

Last, but not the least, I would like to thank to my husband Tunç Karacaören for his presence, support and endless patient during this process. He is an amazing husband and father. His love and support without any complaint or regret has enabled me to complete my studies. My son Ege, I owe you lots of fun hours. I need to thank my

little boy for making me so happy with his cute smile. Words would never say how grateful I am to both of you.

TABLE OF CONTENTS

ABSTRACT v

ÖZ vii

ACKNOWLEDGMENTS ix

TABLE OF CONTENTS xi

LIST OF TABLES xiv

LIST OF FIGURES xv

LIST OF ABBREVIATIONS xvi

CHAPTERS

1 INTRODUCTION AND PRELIMINARIES 1

1.1 Differential equations with piecewise constant argument (EPCA) 2

1.1.1 EPCA as derivative of the greatest integer function 2

1.1.2 Differential equations with piecewise constant argument of generalized type (EPCAG) 4

1.2 Biological and artificial neural networks 10

1.3 Biological neuron structure 13

1.4 Artificial neural network models 14

1.4.1 Hopfield neural network model 15

1.5 Cohen-Grossberg neural networks 17

1.6 Shunting inhibitory neural networks 18

1.7 Applications of neural networks 19

1.7.1 Control theory 19

1.7.1.1 Aircraft control 20

1.7.1.2 Air traffic control 20

1.7.2 Civil engineering 20

1.7.3 Financial analysis 21

1.7.4 Medical diagnosis 21

1.7.5 Time series forecasting 22

1.7.6 Automotive 22

1.7.7 Power systems 22

1.8 Chaotic neural networks 23

1.9 Delay differential equations 24

1.10 Linear matrix inequalities 27

1.11 Some useful definitions and theorems 31

1.11.1 Lyapunov Stability 31

1.12 Organization of the Thesis 32

2 STABILITY OF HOPFIELD NEURAL NETWORKS WITH DELAY 35

2.1 Introduction 35

2.2 Preliminaries 38

2.3 Stability of equilibrium 43

2.4 An Illustrative Example 47

2.5 Conclusion 48

3 A HOPFIELD NEURAL NETWORK WITH MULTI-COMPARTMENTAL ACTIVATION 51

3.1 Introduction 51

3.2 Preliminaries 55

3.3 Main Result 60

3.4 Examples and numerical simulations 64

3.5 Conclusion 68

4 CONCLUSIONS 69

REFERENCES 71

APPENDICES

CURRICULUM VITAE 89

LIST OF TABLES

TABLES

Table 1.1 Comparison between human brain and artificial neural networks . . 12

LIST OF FIGURES

FIGURES

Figure 1.1 The graph of argument $\beta(t)$ [18]. 5

Figure 1.2 The graph of argument $\gamma(t)$ [18]. 6

Figure 1.3 McCulloch-Pitts Model of Neuron [77]. 12

Figure 1.4 Biological neuron 13

Figure 1.5 Interconnection of two neurons [78] 14

Figure 1.6 An electrical circuit for a neuron in the Hopfield model [187] . . . 16

Figure 1.7 Electrical circuit that corresponds to Hopfield neural network model [103] 17

Figure 2.1 Time response of $x_1(t)$ with piecewise constant arguments 47

Figure 2.2 Time response of $x_2(t)$ with piecewise constant arguments 48

Figure 3.1 The graph of argument $\gamma(t)$ [18] 54

Figure 3.2 Time response of $x_1(t)$ and $x_2(t)$ with piecewise constant argument in Example (3.4.25). 65

Figure 3.3 The phase portrait of the system in Example $(3.4.25)$. 66

Figure 3.4 Time response of $x_1(t)$ and $x_2(t)$ with piecewise constant argument in Example $(3.4.26)$. 67

LIST OF ABBREVIATIONS

EPCA	Differential equations with piecewise constant argument
EPCAG	Differential equations with piecewise constant argument of generalized type
LMI	Linear matrix inequality

CHAPTER 1

INTRODUCTION AND PRELIMINARIES

In this thesis, we study on neural networks. Our main aim is to develop a new approach to investigate the existence and uniqueness of the equilibrium, stability of neural networks.

Neural networks were derived by inspiring from the organization of the human brain. The main purpose of artificial neural networks is to simulate the intelligent behavior of humans. Artificial neural network models have been improved in the expectation of creating a system such that behaving like a human brain. They are mathematical models, actually, they are simplified models of neural processing in the brain, which include processing units which are called artificial neurons. A neuron is a processing unit which receives information from the environment by its receptors. It stores the information and after processing gives an output. There are so many usage areas of neural networks such as pattern recognition, optimization, medicine, image processing, civil engineering, music and financial analysis [164].
Roughly speaking, neural networks have attracted the attention of the different disciplines such as biology, engineering, mathematics, physics and medicine. The scientists from all these disciplines, have different views and approaches to study neural networks. Biologists aim to understand the processes in a real neuron. Engineers intend to build artificial neurons, which have learning abilities and simulate the real neurons. From the mathematical view, the qualitative analysis and behaviors of these dynamical systems are attractive.

In the Conference on Differential and Difference Equations at the Florida Institute of Technology, 2005, M. Akhmet proposed to consider nonlinear differential equations

with a more general type of piecewise constant argument, and equivalent integral equations, as the basis of investigation. This development provided a new path for this theory. Instead of the reduction method, they proposed to construct an equivalent integral equation. This method facilitate the way of analysis in many sense.

In the papers [9, 12, 14, 15, 16, 20, 21, 22, 24, 25], neural network models with piecewise constant argument of generalized type were taken into account. However these studies do not include constant delay terms. In this thesis, we pay attention to examine the neural networks with piecewise constant argument of generalized type and delay. We obtained our results by using linear matrix inequalities and Lyapunov's method. This is the novelty of our study. It is obvious that linear matrix inequalities are very powerful instruments for investigating the stability properties of the neural networks. Best of our knowledge, it is the first time that linear matrix inequalities are used in neural networks which contain both piecewise constant argument and delay. In this thesis, we combine piecewise constant argument of generalized with constant delays. We obtain some sufficient criteria for stability of Hopfield neural networks in terms of Lyapunov stability theory and linear matrix inequalities.

1.1 Differential equations with piecewise constant argument (EPCA)

1.1.1 EPCA as derivative of the greatest integer function

Differential equations with piecewise constant argument have been a popular research area due to the interesting applications of this theory since they were introduced. Firstly, Busenberg and Cooke constructed a first-order linear differential equation with piecewise constant argument [43]. This study was about a biomedical problem. Then the studies of K. Cooke, S. Busenberg, J. Wiener and S. Shah followed it [68, 69, 70, 171, 196]. Step by step, too much progress has been made on this field. The existence and uniqueness of solutions, oscillations, stability and so on. have been intensively discussed. They reduced the equations to discrete equations for investigating the qualitative properties of them. Also for several studies, one can see [6, 76, 114, 131, 147, 148, 195], and the references therein.

Typical differential equations with piecewise constant arguments considered by K. Cooke and his coauthors are of the form

$$\frac{dx(t)}{dt} = f(t, x(t), x([t])), \tag{1.1.1}$$

The retarded type $t - n$ and advanced type $t + n$ of differential equations were considered and their stability, oscillatory, existence and uniqueness problems were investigated in [2, 69]. In many real world problems such as mechanical and biological systems, some actions on the systems can be considered as piecewise constants [123, 195, 207, 222]. So, they have been applied and realized widely in many papers and consequently became common. The presence of piecewise constant argument in dynamical systems brings about some uncommon outcomes because they have more complex structure than the classical dynamical systems. The investigations on them have been attractive for the researchers due to the course of actions of piecewise constant systems. In [211], they studied for the existence of almost periodic solutions of retarded differential equations with piecewise constant argument. They established some theorems on the existence of almost periodic solutions by using the Razumikhin technique. In [154], existence, uniqueness and asymptotic behavior of the solutions of a fuzzy differential equation with piecewise constant argument were studied. Some results for the oscillation of a differential equation with fractional delay and piecewise constant argument were acquired in [191]. Also, there is a book [75] which aims to give an introduction to the subject of nonlinear dynamics of piecewise constant systems. It provides principal concepts and theoretically and practically strong tools for researchers in the subject of piecewise constant system. In this book, the deficiency of a systematic investigation on the modeling and properties of the physical problems in the dynamics of piecewise constant systems was pointed out. In [26], systems of nonlinear differential equations with piecewise constant argument were formulated. They evolved a comparison principle. Lyapunov-function method was used to obtain stability results. Additionally, they indicated that piecewise constant arguments contribute to stabilizing unstable systems of ordinary differential equations.

The piecewise constant systems contain the characteristic of differential and difference equations, because the theory of them was based on the reduction principle to discrete equations. Their complete solutions usually based on the continuity of the

systems at the intervals which excludes the switching points. For example, an initial value problem with the piecewise constant argument $[t]$ was examined in each of the intervals of unit length.

1.1.2 Differential equations with piecewise constant argument of generalized type (EPCAG)

In [17], it was proposed a more general type of piecewise constant argument. In this study, a new method was introduced for investigating the differential equations with piecewise constant argument. This method, the construction of the equivalent integral equation, was different from the pointed out above. Instead of the reduction method, they proposed to construct an equivalent integral equation [73, 74]. This method was more efficient than the previous one. Because they got rid of the extra assumptions on the reduced discrete equations. The concept of differential equations with piecewise constant argument has been generalized in [5, 6, 7, 17]. In the book [18], there are interesting results and applications of this theory. They considered the linear and quasi-linear systems with piecewise constant argument and the reduction principle for systems with piecewise constant argument. They showed that the set of all solutions of the linear homogeneous equation was a finite-dimensional linear space under certain conditions. The fundamental matrix of solutions was constructed. For quasilinear systems, the integral representation formula was defined. Basic concepts of stability theory were provided for these equations. This theory was improved for the neural networks in the studies [8, 9, 10, 12, 14, 15, 16], [20]-[26], [36, 60, 76, 157, 189, 199, 210].

Now we will give the descriptions about this theory. The basic terminology used in this dissertation will follow the book [18]. They especially investigated the two systems which contain β and γ type arguments in [18]. The following differential equation includes β argument.

$$x' = f(t, x(t), x(\beta(t))), \tag{1.1.2}$$

where $\beta(t) = \theta_i, i \in \mathbb{Z}$, if $\theta_i \leq t < \theta_{i+1}$, θ_i is strictly increasing real numbers sequence such that $|\theta_i| \to \infty$ as $|i| \to \infty$, $x \in \mathbb{R}^n$, $t \in \mathbb{R}$ and $f : \mathbb{R} \times \mathbb{R}^n \times \mathbb{R}^n \to \mathbb{R}^n$.

The illustration of $\beta(t)$ function is given in Fig.1.1.

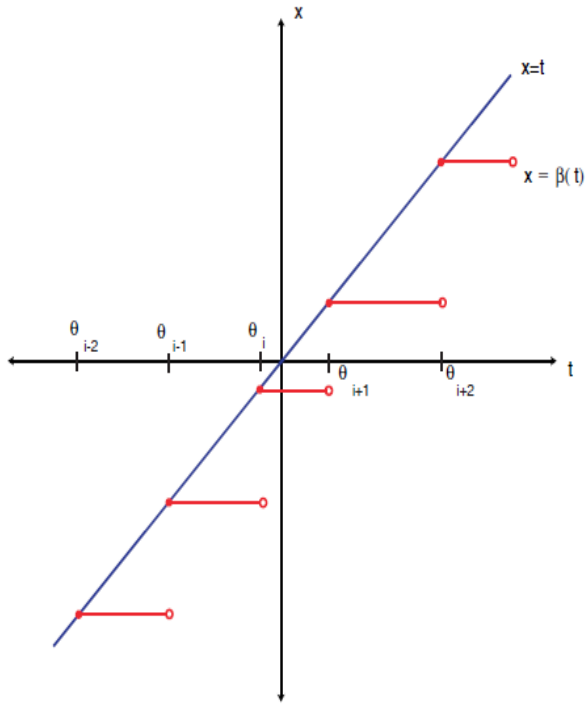

Figure 1.1: The graph of argument $\beta(t)$ [18].

The following differential equation includes γ argument.

$$x' = f(t, x(t), x(\gamma(t))), \tag{1.1.3}$$

where $\gamma(t) = \zeta_i, i \in \mathbb{Z}$, if $\theta_i \leq t < \theta_{i+1}$, θ_i, ζ_i are strictly increasing real numbers sequence such that $\theta_i \leq \zeta_i < \theta_{i+1}$ and $|\theta_i \to \infty|$ as $|i \to \infty|$, $x \in \mathbb{R}^n$, $t \in \mathbb{R}$ and $f : \mathbb{R} \times \mathbb{R}^n \times \mathbb{R}^n \to \mathbb{R}^n$. The illustration of $\gamma(t)$ is given in Fig. (1.2).

The system (1.1.3) includes the function $\gamma(t)$. This function is mixed type. Because, for fix $k \in \mathbb{N}$ if $\theta_k \leq t < \zeta_k$, then $\gamma(t) > t$ and the equation (1.1.3) is advanced. If $\zeta_k < t < \theta_{k+1}$, then $\gamma(t) < t$ and the equation (1.1.3) is delayed.

Definition 1.1.1 *[18] A function $x(t)$ is a solution of a differential equation with piecewise constant arguments on an interval $J \subseteq \mathbb{R}$, if*

1. *$x(t)$ is continuous on J;*
2. *the derivative $x'(t)$ exists for $t \in J$ with the possible exception of the points*

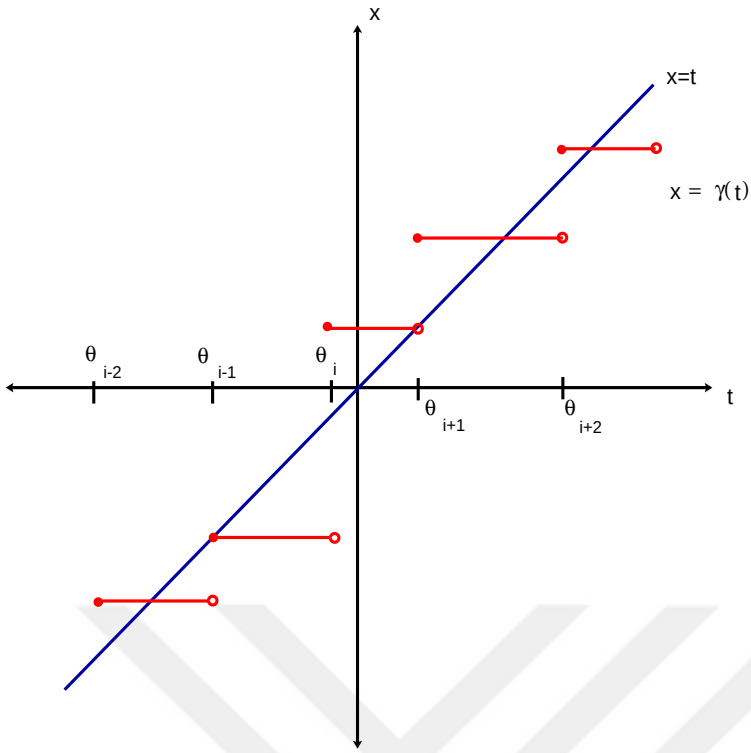

Figure 1.2: The graph of argument $\gamma(t)$ [18].

$\theta_i, i \in A$, A is an interval of $\mathbb{Z}$, where one sided derivatives exist; where one-sided derivatives exist;

3. *the equation (1.1.2) ((1.1.3)) is satisfied by $x(t)$ on each interval $(\theta_i, \theta_{i+1}), i \in A$, and it holds for the right derivative of $x(t)$ at the points θ_i, $i \in A$.*

In [18], they started to examine the most simple linear systems with differential equations with piecewise constant argument. They considered the following equations

$$y'(t) = A_0(t)y(t) + A_1(t)y(\gamma(t)) \tag{1.1.4}$$

and

$$y'(t) = A_0(t)y(t) + A_1(t)y(\gamma(t)) + f(t, y(t), y(\gamma(t)), \tag{1.1.5}$$

where $y \in \mathbb{R}^n$, $t \in \mathbb{R}$. They assumed that the following assumptions were hold:

(H1) $A_0, A_1 \in C(\mathbb{R})$ are $n \times n$ real valued matrices;

(H2) $f(t, u, v) \in C(\mathbb{R} \times \mathbb{R}^n \times \mathbb{R}^n)$ is an $n \times 1$ real valued function;

(H3) $f(t,u,v)$ satisfies the condition

$$||f(t,u_1,v_1) - f(t,u_2,v_2|| \leq L(||u_1 - v_2|| + ||u_1,v_2||)),$$

for some positive constant L, and satisfies the condition

$$f(t,0,0) = 0, \quad t \in \mathbb{R};$$

(H4) matrices A_0, A_1 are uniformly bounded on $\mathbb{R}$;

(H5) $\inf_{\mathbb{R}} ||A_1(t)|| > 0$;

(H6) there exists a number $\bar{\theta} > 0$ such that $\theta_{i+1} - \theta_i \leq \bar{\theta}, \quad i \in \mathbb{Z}$;

(H7) there exists a number $\theta > 0$ such that $\theta_{i+1} - \theta_i \geq \theta, \quad i \in \mathbb{Z}$;

(H8) there exists a positive real number p such that

$$\lim_{t\to\infty} \frac{i(t_0,t)}{t - t_0} = p$$

uniformly with respect to $t_0 \in \mathbb{R}$, where $i(t_0,t)$ denotes the number of points θ_i in the interval (t_0,t).

One can easily see that equations (1.1.4) and (1.1.5) have the form of functional differential equations

$$y'(t) = A_0(t)y(t) + A_1(t)y(\zeta_i)$$

and

$$y'(t) = A_0(t)y(t) + A_1(t)y(\zeta_i) + f(t,y(t),y(\zeta_i),$$

respectively, if $t \in [\theta_i, \theta_{i+1}), i \in \mathbb{Z}$. They wrote that "these systems had the structure of a continuous dynamical system within the intervals $[\theta_i, \theta_{i+1})$, $i \in \mathbb{Z}$".

Definition 1.1.2 *[202] A continuous function $z(t)$ is a solution of (1.1.4) and (1.1.5) on $\mathbb{R}$, if*

1. *the derivative $y'(t)$ exists at each point $t \in \mathbb{R}$ with the possible exception of the points θ_i, $i \in \mathbb{Z}$, where one sided derivatives exist;*

2. *the equation is satisfied by $z(t)$ on each interval (θ_i, θ_{i+1}), $i \in \mathbb{Z}$, and it holds for the right derivative of $y(t)$ at the points $\theta_i, i \in \mathbb{Z}$.*

Let I be an $n \times n$ identity matrix. Denote $X(t,s)$, $X(s,s) = I$, $t, s \in \mathbb{R}$, the fundamental matrix of solutions of the system

$$x'(t) = A_0(t)x(t) \tag{1.1.6}$$

which is associated with systems (1.1.4) and (1.1.5).

(H9) For every fixed $i \in \mathbb{Z}$, $\det[M_i(t)] \neq 0$ for every $t \in [\theta_i, \theta_{i+1}]$,

where

$$M_i(t) = X(t, \zeta_i) + \int_{\zeta_i}^{t} X(t,s)A_1(s)ds, \ i \in \mathbb{Z}. \tag{1.1.7}$$

Theorem 1.1.1 *[18] If $(H1)$ is fulfilled, then for every $(t_0, y_0) \in \mathbb{R} \times \mathbb{R}^n$, there exists a unique solution $y(t) = y(t, t_0, y_0), y(t_0) = y_0$ of (1.1.6) in the sense of definition (1.1.2) if and only if condition $(H9)$ is valid.*

Theorem 1.1.2 *[18] Suppose that $(H1)$ is fulfilled, and a number $t_0 \in \mathbb{R}, \theta_i \leq t_0 < \theta_{i+1}$, is fixed. For every $y_0 \in \mathbb{R}^n$ there exists a unique solution $y(t) = y(t, t_0, z_0)$, $y(t_0) = y_0$ of (1.1.4) in the sense of definition (1.1.2) such that $y(t_0) = y_0$ if and only if $\det[M_j(t_0)] \neq 0$ for $t = \theta_j, \theta_{j+1}, \ j \in \mathbb{Z}$.*

(H10) $2\bar{M}L(1+M)\bar{\theta} < 1$ where m, M and $\bar{M}$ are positive constants such that $m \leq ||Z(t,s)|| \leq M$, $||X(t,s)|| \leq \bar{M}$ for $t, s \in [\theta_i, \theta_{i+1}], \ i \in \mathbb{Z}$.

(H11) $2\bar{M}L\bar{\theta}\kappa(L)(1+M) < m$ where $\kappa(L) = \dfrac{Me^{\bar{M}L(1+M)\bar{\theta}}}{1 - \bar{M}L(1+M)\bar{\theta}e^{\bar{M}L(1+M)\bar{\theta}}}$.

Lemma 1.1.1 *[18] Suppose that $(H1) - (H7)$ and $(H9) - (H10)$ hold, and fix $i \in \mathbb{Z}$. Then, for every $(\xi, z_0) \in [\theta_i, \theta_{i+1}] \times \mathbb{R}^n$, there exists a unique solution $y(t) = y(t, \xi, y_0)$ of (1.1.6) on $[\theta_i, \theta_{i+1}]$.*

Theorem 1.1.3 *[18] Suppose that* $(H1)-(H7)$ *and* $(H9)-(H10)$ *are fulfilled. Then, for every* $(t_0, y_0) \in \mathbb{R} \times \mathbb{R}^n$*, there exists a unique solution* $y(t) = y(t, t_0, y_0)$ *of (1.1.5) in the sense of definition (1.1.2).*

This new concept of theory was improved in the papers [9, 12, 14, 15, 16, 20, 21, 22, 23, 24, 25]. In the paper [21], by using the concept of differential equations with piecewise constant arguments of generalized type, a neural network model was considered. They used the Lyapunov-Razumikhin technique to obtain sufficient criteria for uniform asymptotic stability of equilibrium and Lyapunov functions for global exponential stability. In [20], they operated the method of Lyapunov functions for recurrent neural networks with piecewise constant argument of generalized type. The model contained both advanced and delayed arguments. In [12], retarded functional differential equations with piecewise constant argument were studied. The existence and exponential stability of almost periodic solutions were explored. In [9], they considered differential equations with piecewise constant argument of generalized type and explored their stability with the second Lyapunov method. It was stated that "a generalized type of piecewise constant argument was one of the various kinds of 'memory' effects of the phase variable and the distances between the moments may be very variable" in [21]. For this reason, the generalized type of piecewise constant argument is exactly suitable for neural networks. An existence and uniqueness theorem for the classical relativistic model of two electrons in one-dimensional motion with half-retarded-half-advanced interactions was studied By Driver in [81]. According to this paper, the existence of retarded interactions between charged particles implies the existence also of advanced interactions. Therefore, utilizing mixed type of deviation argument i.e piecewise constant argument of generalized type for neural networks improves the models in a positive manner.

They also proposed the following differential equations in [19],

$$\begin{aligned} y'(t) &= A_0(t)y(t) + A_1(t)y(\gamma(t)) + f(t, y_t, y_{\gamma(t)}), \\ y_t(s) &= y(t+s), \\ y_{\gamma(t)}(s) &= y(\gamma(t)+s),\ s \in [-\tau, 0], \end{aligned}$$

where $t \in \mathbb{R}$, $x \in \mathbb{R}^n$. The function $\gamma(t) = \zeta_i$. If t satisfies $\theta_i \leq t < \theta_{i+1}$, then $\gamma(t) > t$ and it is of advanced type. Also $\zeta_i < t < \theta_{i+1}$, then $\gamma(t) < t$ and it is of

delayed type.

(A1) $A_0, A_1 \in C(\mathbb{R})$ are $n \times n$ real valued matrices;

(A2) $f(t, u, v) \in C(\mathbb{R} \times \mathbb{R}^n \times \mathbb{R}^n)$ is an $n \times 1$ real valued function;

(A3) $f(t, u, v)$ satisfies the condition

$$||f(t, u_1, v_1) - f(t, u_2, v_2)|| \leq L(||u_1 - v_2|| + ||u_1, v_2||)),$$

for some positive constant L, and satisfies the condition

$$f(t, 0, 0) = 0, \quad t \in \mathbb{R};$$

(A4) matrices A_0, A_1 are uniformly bounded on $\mathbb{R}$;

(A5) $\inf_{\mathbb{R}} ||A_1(t)|| > 0$;

(A6) there exists a number $\bar{\theta} > 0$ such that $\theta_{i+1} - \theta i \leq \bar{\theta}, i \in \mathbb{Z}$;

(A7) there exists a number $\theta > 0$ such that $\theta_{i+1} - \theta_i \geq \theta, i \in \mathbb{Z}$.

Lemma 1.1.2 *Suppose that conditions (A1)-(A7) hold true. Then for every* $(\sigma, \Phi, \Psi) \in [\theta_i, \theta_{i+1}] \times C \times C$*, there exists a unique solution* $y(t) = y(t, \sigma, \Phi, \Psi), t \geq \sigma$*, of (1.1.8) and it satisfies the integral equation*

$$\begin{aligned} y(t) &= Z(t, \sigma)[\Phi(\sigma) + \int_{\sigma}^{\zeta_j} Y(\sigma, s) f(s, y_s, y_{\gamma(s)}) ds] \\ &+ \sum_{k=i}^{j-1} Z(t, \theta_{k+1} \int_{\zeta_k}^{\zeta_{k+1}} Y(\theta_{k+1}, s) f(s, y_s, y_{\gamma(s)})) ds + \\ &+ \int_{\zeta_j}^{t} Y(t, s) f(s, y_s, y_{\gamma(s)})) ds \end{aligned} \tag{1.1.8}$$

where $\theta_i \leq \sigma \leq \theta_{i+1}$ *and* $\theta_j \leq \sigma \leq \theta_{j+1}$*,* $i < j$*.*

1.2 Biological and artificial neural networks

For many years, researchers have accumulated so much detailed information about the structure of the human brain. It has not been fully figured out up to now although

there have been numerous studies on it. Let us first start with some basic knowledge about the neurons and neural system. Human brain consists of approximately 10^{11} neurons and more glial cells [27, 86, 93, 107, 109, 172, 178, 179, 183]. Glial cells assist and maintain the neurons. But they do not conduct nerve impulses. Neurons are the conducting cells of the nervous system. They contain a cell body, dendrites and axon. The cell body contains the organelles. The axon's function is to transport the information from the cell body to synaptic terminals. There is a junction which is called a synapse between an axon of one neuron and a dendrite of another neuron. There are two types of synapses. They called as electrical and chemical. At electrical synapses, two neurons are physically connected to one another through gap junctions. At chemical synapses, an action potential arrives at a synapse. Finally, the dendrites render service to receive information from the other neurons.

Several artificial neural network models have been developed over time [99]. Firstly, Mcculloch and Pitts created a simple mathematical model for neurons [142]. It is a neuron of a set of inputs and one output. They used simple binary threshold functions.

$$Sum = \sum_{i=1}^{n} x_i W_i,$$
$$y = f(Sum)$$

where $x_1, \cdots, x_n$ were a set of inputs, $W_1, \cdots, W_n$ were weights and y was the output. The inputs could be either a zero or a one. And the output was a zero or a one. If this final sum is less than some value (threshold), then the output is zero. Otherwise, the output is a one. There is the graphic of the model in Fig.1.3. Donald Hebb introduced the Hebb's learning rule in his book [101]. According to the this rule, a neuron can achieve learning by repeated activation of another neuron. He wrote: "When one cell repeatedly assists in firing another, the axon of the first cell develops synaptic knobs (or enlarges them if they already exist) in contact with the soma of the second cell. According to Hebb's principle, "The weight between two neurons increases if the two neurons activate simultaneously, and reduces if they activate separately. Rosenblatt developed perceptron model which is the first artificial neural network [168]. The perceptron of Rosenblatt is based on the neuron model of McCulloch and Pitts. In this study, McCulloch and Pitts made an affort to understand how the brain could generate complex patterns by using many basic cells that are

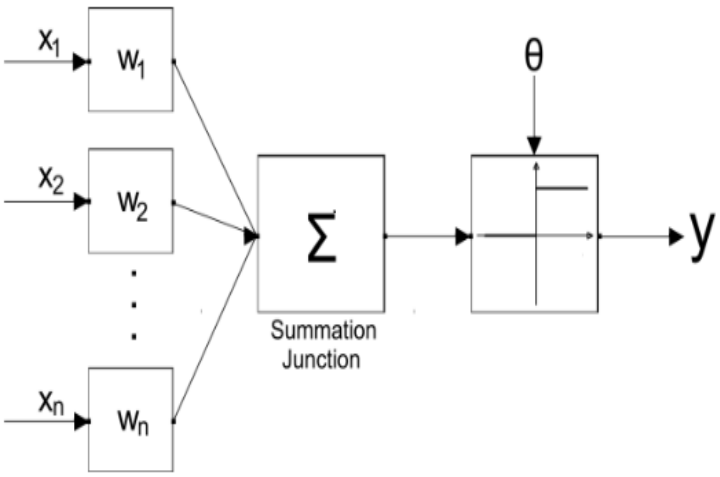

Figure 1.3: McCulloch-Pitts Model of Neuron [77].

connected together. In addition to McCulloch and Pitts model, the perceptron model added an extra input that represents bias. The equation was represented as follows:

$$Sum = \sum_{i=1}^{n} x_i W_i + b,$$
$$y = f(Sum)$$

where b denoted the bias value.

A comparison between human brain and artificial neural networks is given in Table (1.1).

Table 1.1: Comparison between human brain and artificial neural networks

Human Brain	Artificial
Neuron	Processing unit
Dendrites	Input unit
Axons	Output unit
Cell body	Processing function
Synapse	Weights

As time goes by more and more artificial neural network models have been developed. Some popular neural networks have been introduced such as Hopfield, Cohen-Grossberg, Bidirectional associative memory, shunting inhibitory cellular neural networks, etc. [41, 66, 103, 119]. In 1982, Hopfield introduced a different type of neural

network called Hopfield neural network [103]. The main difference of this network from the earlier networks was its recurrent feature of feedback between neurons. It has been modified and improved by many authors [46, 48, 49, 61, 62, 63, 64, 88, 92, 104, 105, 125, 129, 134, 163, 181, 192, 208, 213, 215, 216, 220].

1.3 Biological neuron structure

The biological neural networks consist of neurons as in Fig. (1.4) and a neuron can be separated into three distinct parts, called dendrites, cell body, and axon. Firstly, the dendrites receives the signals from other neurons and transmits them to the cell body. The cell body is the processing unit that performs an important non-linear processing step: If the total input exceeds a certain threshold, then an output signal is generated. The output signal is taken over by the axon, which delivers the signal to other neurons. The junction between two neurons is called a synapse. A neuron sends a signal across a synapse. A presynaptic cell and postsynaptic cell refer to the sending neuron and the receiving neuron, respectively. A neuron processes and transmits information

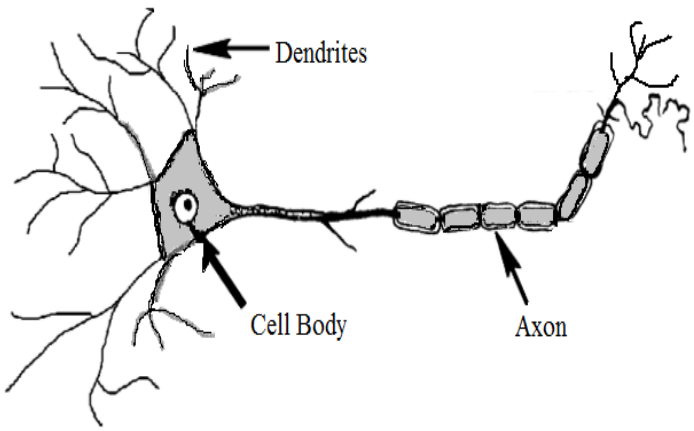

Figure 1.4: Biological neuron

electrically and chemically. Each neuron has a voltage. During an action potential, ion channels open and the cell depolarizes. Each open channel allows ions to move from one side of the membrane to the other. The cell membrane is a thin layer which isolates the cell from the environment. The signal is then propagated along the axon

and conduction ends at axon terminals. And the cell gives the information as an output. After the conduction the cell begins to re-polarize. This information can be transmitted to the other cells by synapses. Various types of neurotransmitters are unleashed and they pass the cell membrane into the synaptic gap between neurons. The Fig.(1.5) represents the interconnection of two neurons.

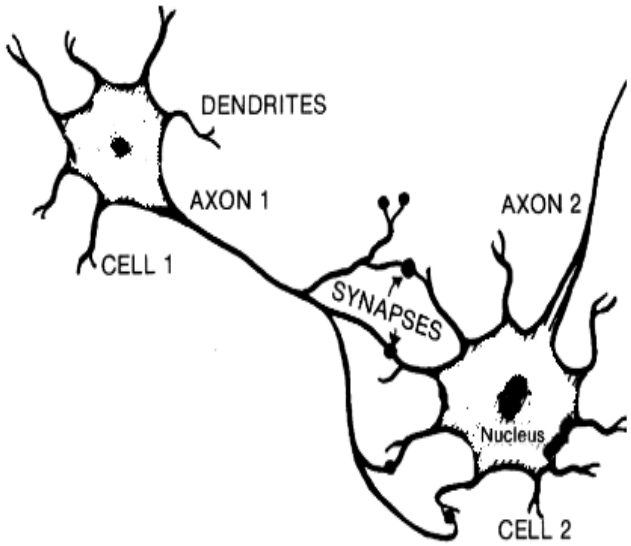

Figure 1.5: Interconnection of two neurons [78]

1.4 Artificial neural network models

Artificial neural networks are information processing structures which are interconnected by weighted connections and composed of processing elements. They were developed by inspiring of the human brain [71, 99, 107]. They consist of artificial neurons, which are basic buildings of artificial neural networks. Each artificial neuron receives as sets of inputs. Each input is multiplied by a weight. After the summation of all weighted inputs, these weighted inputs are added together and if they overlap a threshold value, the sum is processed by an activation function and the neuron sparks. In any other case the neuron does not fire. The activation function can be a sigmoid function, a hyperbolic tangent function or a step function. They are all advantages and disadvantages according to the different cases. For continuous and discontinuous cases, the neural networks can be represented by differential equations and difference equations, respectively. The neural networks can be used for

classification, clustering, vector quantization, patter recognition, forecasting, function approximation, control applications and optimizations [164]. They have become increasingly important based on successes in many practical applications. Some popular artificial neural network models are, Hopfield neural network, Cohen-Grossberg neural network, shunting inhibitory cellular neural network and bidirectional associative memory neural network [103, 119]. The detailed information about them will be given in the following subsections.

1.4.1 Hopfield neural network model

This model was first proposed by Hopfield [103]. It has attracted a great deal of attention in the literature [46, 48, 49, 61, 62, 63, 64, 88, 92, 104, 105, 125, 129, 134, 163, 181, 192, 208, 213, 215, 216, 220]. In this model, each neuron works in accordance with the information which comes from other neurons. Hopfield networks are a kind of recurrent neural networks that can be used as an associative memory. Associative memory is known as content-addressable memory. The main task of content-addressable memory is to revoke a pattern stored in memory. It responses the demands of completing an incomplete pattern or clearing up a noisy version of the pattern. Associative memory is one of the fundamental functions of the brain. It associates a broad range of concrete or intangible things. For example, it associates the addresses with names, letters with colors, voices with smell, etc. Associative memories can be implemented either by using the feed forward or recurrent neural networks. Among all the autoassociative networks, the Hopfield network is the most widely known. The associative memory property refers to the fact that if the weights are chosen appropriately input states that are close to one of the memory patterns will be mapped to output states that are even closer to that memory pattern.

The Hopfield network was classified in two categories: continuous and discrete. The continuous model was based on an additive model and the discrete one was based on the McCulloch-Pitts model. The continuous Hopfield neural network model has similarities with an electrical circuit model. It can be described by the following differential equations:

$$C_i \frac{dv_i(t)}{dt} = -\frac{v_i(t)}{R_i} + \sum_{j=1}^{n} T_{ij} g_j(v_j(t)) + I_i, \quad i = 1, 2, \cdots, n, \tag{1.4.9}$$

where C_i is the input capacitance of the cell membrane, R_i is the transmembrane resistance, T_{ij} represents the connection strength between the neurons i and j, $v_i(t)$ stands for the state vector of the ith unit at time t, $g_j(v_j(t))$ denote the activation function corresponding to the unit j at time t and I_i is the external constant input to neuron i. This model's structure was based on Kirchoff rule and OHM's law. In a biological system, v_i will be tardy the abrupt outputs v_j of the other cells because of the input capacitance C of the cell membranes, the transmembrane resistance R, and the finite impedance T_{ij}^{-1} between the output V_j and the cell body of cell i. The Fig.1.6 and Fig.1.7 are a representation of the model (1.4.9).

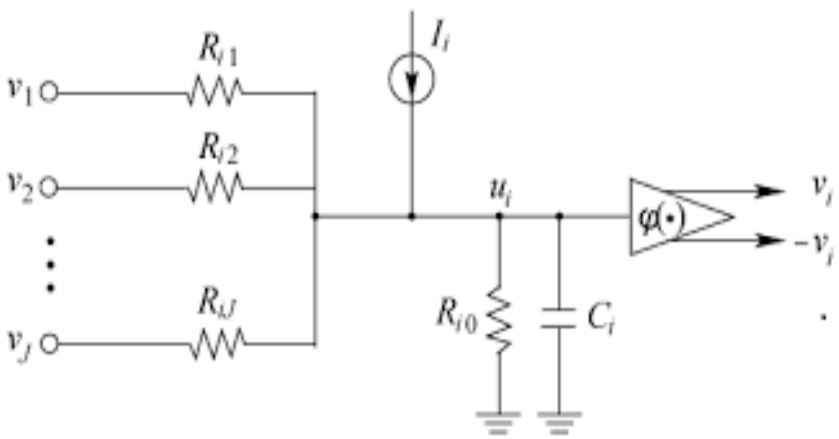

Figure 1.6: An electrical circuit for a neuron in the Hopfield model [187]

All the nodes in a Hopfield neural network are not only inputs but also outputs. It means that each node is an input to all other nodes in the network. The network is fully connected and weights are determined by the Hebbian principle. The connections are symmetric and there is no unit with itself. These symmetric connections guarantee the energy function decreases monotonically. In a neural network, stability has a major importance. Cohen and Grossberg [66] showed that the recurrent neural networks are stable if $T_{ij} = T_{ji}$ for $i \neq j$ and $T_{ii} = 0$ for all i.

Hopfield introduced a continuous energy function E which measures the total energy of the network. The energy function was given as below,

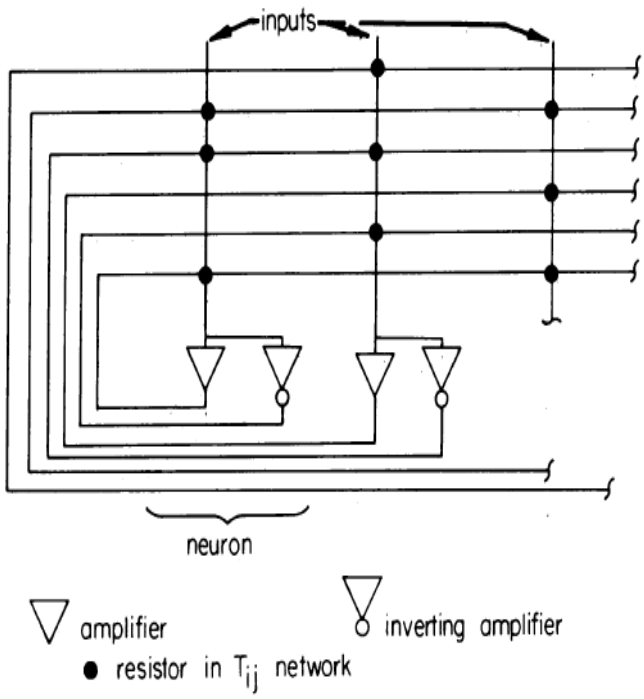

Figure 1.7: Electrical circuit that corresponds to Hopfield neural network model [103]

$$E = -\frac{1}{2}\sum_{j=1}^{N}\sum_{i=1}^{N} T_{ij}V_iV_j + \sum_{i=1}^{N}\frac{1}{R_i}\int_0^{V_i} g^{-1}(V)dV - \sum_{i=1}^{N} I_iV_i. \qquad (1.4.10)$$

"The convergence of the neuronal state of the model to its stable states was depended on the existence of an energy function that directs the flow in state space "[103]. From the definition of the energy function, it was bounded. The energy function was a Lyapunov function of the model. The model was stable in accordance with Lyapunov's stability theorem. Also the function E of the Hopfield network was monotonically decreasing. Then the Hopfield network was globally asymptotically stable.

1.5 Cohen-Grossberg neural networks

One of the most popular models of artificial neural networks is Cohen-Grossberg neural networks [66], which is the generalization of well-known Hopfield neural networks. While Cohen-Grossberg neural networks is memorizing the information, it uses content addressable memory. In the real life it is possible to have delays while the

information transferring. So for a good approach, utilizing differential equations with piecewise constant delay is very useful. It is a desiring situation that these networks have a unique equilibrium point which is globally exponentially stable for mathematicians and engineers. For example, if a neural network is used for solving some optimization problems, it is appealing for the neural network to have a unique globally stable equilibrium point. Therefore, the problem of stability analysis of Cohen-Grossberg neural networks have received great interest. Many results on this topic have been reported in the literature and papers cited therein [52].

$$x_i'(t) \quad = \quad -a_i(x_i(t)) \left[b_i(x_i(t)) - \sum_{j=1}^{n} c_{ij} g_j(x_j(t)) - I_i \right], \qquad (1.5.11)$$

where $n \geq 2$ is the number of neurons in the network, u_i represents the state variable associated with the ith neuron, a_i stands for an amplification function, b_i is an appropriately behaved function and (c_{ij}) stands for the connection strengths between neurons. The activation function g_j shows how neurons respond to each other.

1.6 Shunting inhibitory neural networks

Shunting inhibitory cellular neural networks was introduced by Bouzerdoum and Pinter [41]. They have been widely studied in the recent years due to the existence of too many application areas such that speech, perception, robotics, pattern recognition, etc. The original form of shunting inhibitory cellular neural networks is given in the following equation

$$x_{ij}'(t) \quad = \quad -a_{ij} x_{ij}(t) - \sum_{C_{kl} \in N_r(i,j)} C_{ij}^{kl} f(x_{kl}(t)) x_{ij}(t) + L_{ij}(t) \qquad (1.6.12)$$

where $i = 1, \cdots, n, j = 1, \cdots, m$; C_{ij} is the cell at the (i, j) position of the lattice, the $r-$neighborhood $N_r(i, j)$ of C_{ij} is

$$N_r(i,j) = \{C_{kl} : \max(|k-i|, |l-j|) \leq r; 1 \leq k \leq n; 1 \leq l \leq m\}; \quad (1.6.13)$$

x_{ij} represents the activity of the cell C_{ij}; $L_{ij}(t)$ represents the external input to C_{ij}, the constant $a_{ij}(t) > 0$ is the passive decay rate of the cell activity, $C_{ij}^{kl}(t) \neq 0$

is the connection strength of postsynaptic activity of the cell transmitted to the cell C_{ij}, the activity function $f(x_{kl}(t))$ is a positive continuous function representing the output or firing rate of cell C_{kl}. If we simplify the explanation about this model, there is an excitatory external input and the other weighted terms, which become from the procession of the inputs from the r-neighborhood cells by activation function, behaves as inhibitory inputs.

1.7 Applications of neural networks

Neural networks help us to provide solutions to real life problems. There are plenty of studies on applications of neural networks. One can find about current works on the neural networks in [1, 3, 28, 31, 59, 82, 87, 98, 100, 104, 110, 117, 120, 122, 130, 143, 156, 161, 200, 214] and an overview of them in the paper [161]. Also we refer to the book [164] for real life applications of neural networks. There is a broad range of usage areas of neural networks. The reason for the popularity of the neural networks is based on the special properties of them such as estimation, prediction and classification. Some usage areas of such networks will be given in the following part separately.

1.7.1 Control theory

Control theory is an interdisciplinary research area of engineering and mathematics. The problems studied in control theory include dynamical systems. Mainly, there must be a controlled system and a controller. One of the most important application areas for neural networks is control. The main aim of control is to influence the behavior of dynamical systems [175]. There are major restrictions on designing controls processes such as complexity, nonlinearity, and uncertainty. The architecture of neural networks presents solutions to the these restrictions and as a matter of course they have been properly used in control theory. Several types of neural networks have been appeared to use in control theory. Multi-layered neural network, recurrent neural networks such as Hopfield, the content-addressable memory and the gaussian node network can be given as examples [182]. The autopilots in aircraft, the point-

ing mechanisms of space telecommunication antennas, air traffic, speed regulators of machines are some examples of control systems.

1.7.1.1 Aircraft control

There are many different studies which are based on neural networks for aircraft [44, 150]. One of the most prominent applications of neural networks is its use in damage-adaptive aircraft control. There are some results such that a neural network can control an aircraft successfully in a emergency case [109]. Also artificial neural networks can help to detect and estimate aircraft unit fault diagnosis, real time assessment of engine conditions and so on. Also in [116], two major applications of artificial neural networks on aircraft design optimization were presented: a non-linear input-output mapping for system optimization, and pattern classification and recognition for system monitoring.

1.7.1.2 Air traffic control

The air traffic control systems used by airports have complex structures. They have been depending on systems and algorithms which were developed almost forty years ago. The nature of this field includes complex decisions such as take-off, landing, etc. are carried out by air traffic controllers [165]. The controllers are stick to several parameters. They used back propagation network for decision making in [165]. Moreover they stated that by incorporating neural networks onto the air traffic workload on air traffic can be decreased highly. In [86], scheduling the arrival of aircraft was formulated as an optimization problem in terms of Hopfield neural networks. They proved that Hopfield network can be used as predicting targets in [102].

1.7.2 Civil engineering

Artificial neural networks have widely used in modeling of civil engineering problems in the last two decades. For instance, hydrology, tide level prediction, runoff prediction, reservoir operation, etc. with the view of estimating and predicting char-

acteristics of neural networks [115]. For example, by using multi layered feed forward network with Back Propagation algorithm an artificial neural networks technique was applied to rainfall-runoff modelling [115]. This kind of methods have been extended to reservoir operation, streams flow prediction, soil water storage, flood routing, classification river basins, etc.

1.7.3 Financial analysis

The characteristics of neural networks provides an alternating instrument for recognition, classification, and forecasting in the field of finance. The properties of them such as accuracy, adaptability, robustness, and efficiency are useful in solving financial problems. There are so many suitable areas to use neural networks in financial analysis such as bankruptcy prediction of firms/banks, bond trading, commercial loan application analysis, bond rating, credit evaluation, loan evaluation, stock market volatility forecasting, future options hedging, future options pricing, interest rate prediction, insurance problem examination, financial statement analysis and interpretation, mortgage prepayment rate prediction, mortgage-backed security portfolios management and so on [197]. Neural networks not only accumulate, store, and recognize patterns of knowledge based on experience, but also constantly reflect and adapt to new environmental situations while they are performing predictions by constantly retraining and relearning. As a result, they are more robust and accurate, with lower-prediction risks and less variance in their errors than the other statistical techniques.

1.7.4 Medical diagnosis

Artificial neural networks have played a key role for many important developments in medicine and healthcare since they are capable of learning the relationships between the input-output data [38]. Some of the application areas contain analysis of electrocardiography (ECG), electromyography (EMG) and electroencephalography (EEG) [38]. There are plenty of different fields within the biomedical fields where neural networks have been utilized. Some of them can be listed as medical image diagnosis, low back pain diagnosis, glaucoma diagnosis, medical decision support systems,

cardiology, gynecology and breast cancer diagnosis, etc. In [89], a model of dengue fever for the Cuban case was investigated. In this work, the introduction of delay differential equations to the system constitutes an interesting setting for estimation. They designed a test estimator in terms of Hopfield neural networks. In [149], they accomplished with Hopfield network to diagnose the liver disorders with the accuracy of 88.2% and Fuzzy Hopfield network with the accuracy of 92%. In [146], they solved the binary constraint satisfaction problem by using Hopfield model.

1.7.5 Time series forecasting

Time series analysis has the following aims: forecasting, modeling and characterization. Some examples of time series are electrical demand for a city, number of births in a community, air temperature in a building and so on. In time series forecasting, the past is used for predicting the present. With this view, it has similarities with artificial neural networks. Also from a statistical aspect, artificial neural networks are very useful for time series forecasting because of their predictive technique [67], [198]. They are proper for forecasting with their nonlinear learning and noise tolerance capabilities. They have been utilized for a wide range of applications, where statistical methods are traditionally employed.

1.7.6 Automotive

Neural networks have been used for fuel consumption, fuel injection control and recognition of misfiring in diesel engines [162], etc. In [180], they gave a procedure for using neural networks to identify the nonlinear dynamic model of the intake manifold and the throttle body processes in an automotive engine. There are several types of applications of neural networks in this area in [152, 180].

1.7.7 Power systems

Neural networks have been used for various problems in design and development of power systems since the 1990's. There are some literature reviews in [34, 37]. Some

neural network applications to power systems are load forecasting, fault diagnosis, economic dispatch, security assessment and transient stability. Multi-layer perceptrons, Hopfield networks, and Kohonen neural networks were the three major models for power systems.

Epidemiology, game-playing and decision making, visualization, biological modelization, and image processing are other application areas which the neural networks are used in frequently. Additionally, there are some studies on applications of neural networks on music [40, 193]. Especially the performance of Hopfield neural network in solving optimization problems are by far better than other neural networks [86]. Hopfield and Tank initiated to utilize the neural networks in solving optimization problems [106]. They worked on a traveling salesman problem. The studies for the adaptation of Hopfield neural networks to the real world problems have been extended until today [4, 32, 89, 149, 194, 102].

1.8 Chaotic neural networks

In the papers [11, 13, 22, 85], chaos in shunting inhibitory cellular neural networks was studied. In [198], they examined the dynamical analysis of retarded shunting inhibitory cellular neural networks with Li-Yorke [124] chaotic external inputs and outputs. They proved the presence of generalized synchronization in coupled retarded shunting inhibitory cellular neural networks, and confirm it in terms of the auxiliary system approach. In [13], they took into account shunting inhibitory cellular neural networks with inputs and outputs that are chaotic in a modified Li-Yorke sense. It was the first time in the theory of neural networks that the Ott-Grebogi-Yorke control method was utilized to stabilize almost periodic motions. The techniques of them provided to investigate chaotic dynamics in human brain, communication security, combinatorial optimization problems and control of legged robots. They considered the dynamics of shunting inhibitory cellular neural networks with impulsive effects in [85]. We give a mathematical description of the chaos for the multidimensional dynamics of impulsive shunting inhibitory cellular neural networks, and prove its existence rigorously by taking advantage of the external inputs. The Li-Yorke definition

of chaos is used in our theoretical discussions. In [22] it was presented that shunting inhibitory cellular neural networks behave chaotically. The analysis was on the basis of the Li-Yorke definition of chaos.

1.9 Delay differential equations

In delay differential equations, the derivative of the unknown function at a certain time is given in terms of the values of the function at previous times. They are also called time delay systems. In ordinary differential equations, the unknown function and its derivatives are considered at the same time variable t. But in delay differential equations, they are also evaluated at t and at earlier instants differently from the ordinary differential equations. The application areas of them range from biology, economics, physiology, mechanical systems to neural networks. One can see [39, 79, 80, 84, 95, 96, 97], for the theory of delay differential equations.

Many scientists, including neuroscientists, engineers, and biologists have done a lot of research on dynamical system with time delay [90, 121, 174]. Dynamical systems with time delay exist extensively in practical systems. For example, they arises in population growth models. One of the most popular delay differential equation is Logistic equation. According to the logistic equation, the organism's birth rate depends immediately on changes in population size [184]. Logistic equation with delay which was proposed by Hutchinson [113] as below

$$\frac{dx}{dt} = rx(t)\left(1 - \frac{x(t-\tau)}{K}\right), \tag{1.9.14}$$

where $r > 0$ was the intrinsic growth rate, $K > 0$ was the carrying capacity of the population and $\tau > 0$ was the time unit from the egg formation to hatching. Also time delays come out in immunology and epidemic diseases. "The delays are used in immunology to represent the time needed for immune cells to divide, or become destined to die. In epidemic models, delays arise as a result of the time spent in each stage of the disease, e.g. when someone becomes infected with a disease they do not recover instantaneously but only after some period of time" [45].

General form of delay differential equations is represented as follow:

$$y'(t) = f(t, y(t-\tau_1, \cdots, y(t-\tau_n)),\ t \geq t_0,$$
$$y(t) = \varphi(t), t \leq t_0,$$

where $\varphi \in C$ and time delays $\tau_1, \cdots, \tau_n$ are always non-negative.

Now, let us consider the time delays in neural networks. Our brain consists of millions of cells. Each of these cells behaves as a complex system in itself. Every cell continually sends electrical signals to other cells and there are tens of thousands of connections between these cells. These connections are chemical synapses and electrical gap junctions. Information, comes from a neuron, is accepted as input by another neuron. And after processing, it gives an output. During all of these steps i.e. transferring or processing of the information, time delays or discontinuities may occur. Time delays occur in the course of propagation of information along the cell and transmission of information to the other cells [33, 65, 81]. Their presence may depend on conduction velocity, axon length, membrane structure and chemical kinetics. These delays might cause the changes of the dynamics of neural networks. In the past few years, there has been intensive studies on the analysis of neural networks with time delay [29, 30, 35, 47, 50, 52, 53, 55, 56, 57, 72, 91, 92, 94, 125, 126, 129, 134, 136, 144, 145, 176, 188, 201, 202, 209, 212, 213, 215, 216, 218, 219, 220, 221].

There are several types of delays such as constant, time variable, distributed, interval time-varying and multiple which have been added to neural network models [35, 53, 54, 128, 129, 132, 133, 134, 153, 176, 177, 185, 192, 221]. In many models, the time delays are fixed. However, there are studies with time-varying and distributed delays for a more realistic approach. The time varying delays include time dependence, and distribution of delays, represents the case where the delay occurs in some range of values with some associated probability distribution [45, 68, 169, 190].

In [141], time delay has been introduced a neural network model firstly. They considered the effects of delayed response in a continuous-time neural network. In the stability analysis of the systems, they assumed that the delays and gains of all neurons are identical. Global stability of equilibrium in a Hopfield-type network with discrete time delays or gamma distributed time delays were investigated in [2]. Multiple delays are introduced to Cohen Grossberg neural networks and qualitative properties

of the model were studied in [209]. In [192], generalized neural networks with discrete and distributed time delays were studied. In [133], they have firstly considered the problem of robust stability analysis for generalized neural networks with both multiple discrete and multiple distributed delays. In both [133] and [192], they used Lyapunov-Krasovski functional method and linear matrix inequality technique to obtain a sufficient condition for the global robust stability of generalized neural networks with discrete and distributed delays. In [216], a new sufficient condition for the global stability of the unique equilibrium point of delayed Hopfield neural networks was obtained, which was dependent on the magnitude of delays. In the literature, there are investigations on neural networks with delay based on delay-independent and delay-dependent conditions. The delay-independent results are simpler than delay-dependent results. In the literature although there are several results depend on the delay terms, the results of the studies on delayed Hopfield networks are generally independent of the delay term [215]. For example, they gave a new sufficient condition for the asymptotic stability on condition that the delays do not pass over sufficiently small bounds in [215]. In [188], they obtained some sufficient conditions for the globally asymptotic stability of a unique equilibrium for the Cohen-Grossberg neural network with multiple delays. They used activation functions which were not monotone and differentiable. Also there was no symmetry restriction for interconnections. They utilized Lyapunov functionals and functions with the Razumikhin technique. They labeled the delays as harmless because the results were all independent of the size of the delays.

In [202], sufficient conditions for the global exponential stability of the unique equilibrium of the neural networks with time-varying delays. The activation functions were supposed to be globally Lipschitz continuous and a linear matrix inequality was developed for the investigation. In [52], some sufficient criteria were given for the global asymptotic stability and exponential stability of the equilibrium point of a class of delayed Cohen-Grossberg neural networks. They used the linear matrix inequality approach with Lyapunov-Krasovskii functional method and Halanay inequality technique. In [129], Hopfield neural networks which included continuously distributed delays were studied. They derived some sufficient conditions for the existence and exponential stability of the almost periodic solutions for the system. The results were

obtained by using the fixed point theorem and differential inequality techniques. In [216], Zhang et al. obtained some results on global asymptotic stability by using the Lyapunov functional and the linear matrix inequality method for Hopfield neural networks with delay. In [176], they assumed that the activation functions were not Lipschitzian and time-varying delays were not differentiable. By using Lyapunov function, M-matrix theory and inequality technique, new sufficient conditions were considered for the qualitative properties of Cohen-Grossberg neural network which contained time-varying and continuously distributed delays.

To sum up, there are so many alternative results which depend on the characteristics of activation functions, type and size of delays and the methods for examining the dynamical features of the neural networks which include time delays are under investigation. In the literature, the most of existing outcomes for the stability of neural networks are based on the Lyapunov's direct method and Lyapunov Krasovskii functional method. Also some linear matrix inequalities, Halanay technique and M-matrix theory supports these methods.

1.10 Linear matrix inequalities

Linear matrix inequalities are very popular instruments for the investigation of the stability of dynamical systems because of their efficiency. In fact, they can be classified as optimization problems. These problems are inevitably arises in many areas such as mechanical and biological systems, signal processing, image verification, economics, and so on. These problems can be arranged using linear matrix inequalities. In the control problems, it was preferred that converting the problem to a linear matrix inequality to instead of finding an analytic solution for it, because solving linear matrix inequalities is easy, feasible and fast. In the light of this information we used a linear matrix inequality to obtain sufficient conditions for the stability of our system.

The history of LMIs in the analysis of dynamical systems started with the study of Lyapunov [140]. In his study, he showed that the following equation

$$x'(t) = Ax(t) \tag{1.10.15}$$

is stable if and only if there exists a positive definite matrix P such that $A^T P + PA <$

0. In 1940's, they had discovered that it could be useful to apply Lyapunov's methods for some control engineering problems [139]. But these problems did not contain big size LMIs. So they solved the problems by hand. The solution of the LMIs that arose in the problem of Lur'e [139] was reduced to simple graphical criteria by using the positive-real lemma [138, 158, 159, 160, 203, 204, 205, 206]. Then, the positive-real lemma and extensions were deeply considered. In the early 1980's, it was proposed that many LMIs could be solved by computer via convex programming. In 1984, N. Karmarkar introduced a new linear programming algorithm [118]. Then a new method, called as interior-point method, was introduced. It could be applied directly to problems involving LMIs. In the book [42], they used the sentences "It is fair to say that Yakubovich is the father of the field and Lyapunov the grandfather of the field." for describing the main developments of the LMIs. A linear matrix inequality can be defined as follows [42]

$$F(x) := F_0 + \sum_{i=1}^{m} x_i F_i, \tag{1.10.16}$$

where $x \in \mathbb{R}^m$ and the $n \times n$ symmetric matrices F_i are given.

Some properties of linear matrix inequalities can be stated as follows. This LMI is equivalent to n polynomial inequalities. So (1.10.16) is equivalent the following polynomial inequalities

$$F_{0,11} + \sum_{i=1}^{m} x_{i,11} F_{i,11} > 0,$$

$$\begin{pmatrix} F(x)_{11} & \cdots & F(x)_{1k} \\ \vdots & \cdots & \vdots \\ F(x)_{k1} & \cdots & F(x)_{kk} \end{pmatrix} > 0,$$

$$\vdots$$

$$det(F(x)) > 0$$

where $F(x)_{ij}$ is the ijth element of $F(x)$, $i, j = 1, \cdots, n$.

Many problems in linear algebra can be converted into problems of solving some LMIs, for example eigenvalue minimization, matrix norm minimization, Schur stabilization. In the book [83], developing processes of linear matrix inequalities were

summarized as follows; routing period, growth period and flourishing period. They indicated that there were more than 250 papers on linear matrix inequalities, each year between 2000-2013 [83]. Linear matrix inequalities have so many advantages. Firstly they can be solved numerically efficiently, whether or not their size is very large. Also there are so many software packages like MATLAB LMI toolbox for solving problems in terms of linear matrix inequalities.

Now we will give some linear matrix inequalities.

Lemma 1.10.1 *[159] For arbitrary scalars a, b and $\delta > 0$, the following inequality hold*

$$2ab \leq \delta a^2 + \frac{1}{\delta} b^2.$$

Lemma 1.10.2 *[159] Let $U, V \in \mathbb{R}^{m\times n}$, $P > 0$, and $\delta > 0$ be a scalar then*

$$U^T PV + V^T PU \leq \delta U^T PU + \delta^{-1} V^T PV.$$

When $U = u$ and $V = v$ are vectors, it becomes to

$$2u^T Pv \leq \delta u^T Pu + \delta^{-1} v^T Pv.$$

Lemma 1.10.3 *[159] Let $U \in \mathbb{R}^{m\times n}$, $U \in \mathbb{R}^{n\times m}$. Then for arbitrary $\delta > 0$ be a scalar, the following inequality is true*

$$USV + V^T S^T U^T \leq \delta UU^T + \delta^{-1} V^T V, \text{ for every } S \in \mathbb{F},$$

where $\mathbb{F} = \big\{S | S \in \mathbb{R}, S^T S \leq I\big\}$.

Lemma 1.10.4 *[42] Given any real matrices $U_1,\ U_2,\ W$ of appropriate dimensions and a scalar $\epsilon > 0$ such that $0 < W = W^T$, then the following matrix inequality is true:*

$$U_1^T U_2 + U_2^T U_1 \leq \epsilon U_1^T W U_1 + \frac{1}{\epsilon} U_2^T W^{-1} U_2. \tag{1.10.17}$$

Lemma 1.10.5 *[159] For arbitrary nonzero vectors, $u, v \in \mathbb{R}^n$, there holds*

$$\max_{S \in \mathbb{F}} (u^T S v)^2 = (u^T u)(v^T v),$$

where $\mathbb{F} = \{S | S \in \mathbb{R}^{n \times n}, S^T S \leq I\}$.

They represented a set of nonlinear inequalities as a linear matrix inequality by the following lemma.

Lemma 1.10.6 *[42] The linear matrix inequality*

$$\begin{pmatrix} Q(x) & S(x) \\ S^T(x) & R(x) \end{pmatrix} > 0, \tag{1.10.18}$$

is equivalent to the following condition:

$$R(x) > 0,\ Q(x) - S(X)R^{-1}(X)S^T(x) > 0$$

where $Q(x) = Q^T(x), R(x) = R^T(x)$*, and* $S(x)$ *depend affinely on x.*

Lemma was generalized to nonstrict inequalities as follows:

Lemma 1.10.7 *[42] Suppose Q and R are symmetric. The condition*

$$\begin{pmatrix} Q & S \\ S^T & R \end{pmatrix} \geq 0,$$

is equivalent to

$$R \geq 0,\ Q - SR^+S^T \geq 0,\ S(I - RR^+) = 0$$

where R^+ *the Moore-Penrose inverse of R.*

Many researchers have taken the advantage of linear matrix inequalities [58, 112, 126, 127, 151, 155, 167, 170, 186, 202, 217]. In [166], the exponential stability and periodic solution of high-order neural networks with time delay were considered. They used Lyapunov method and LMI technique. In [186], by employing Lyapunov functional and the linear matrix inequality approach, several new sufficient conditions in LMI form were acquired for the global exponential stability of

the equilibrium point for the bidirectional associative memory neural networks with both time-varying delays and general activation. Bidirectional associative memory neural networks with constant or time-varying delays were studied in [112]. Their approach contained the Lyapunov–Krasovskii functionals in combination with linear matrix inequality for investigating the exponential stability of the networks. The robust stability analysis of delayed Cohen–Grossberg neural networks were considered in [167]. They got the results in terms of Lyapunov stability theory and linear matrix inequality technique. In [135], new delay-dependent asymptotic stability conditions for delayed Hopfield neural networks were given by using a linear matrix inequality. Some linear matrix inequality based criteria for the uniqueness and global robust stability of the equilibrium point of Hopfield-type neural networks with delay were given in [173]. They examined a generalized model of high-order Hopfield-type neural networks with time-varying delays. Some global stability criteria of the system were derived by using Lyapunov method, linear matrix inequality and analytic technique in [137]. The paper [51] was about the global robust stability of equilibrium for interval neural networks with time delays. In [111], stability analysis for the generalized Cohen Grossberg neural networks with inverse Lipschitz neuron activations was considered by utilizing nonsmooth analysis approach, linear matrix inequality technique, topological degree theory and Lyapunov-Krasovskii function method. The stability analysis of Hopfield neural networks with delays and impulsive perturbations was worked in [125].

1.11 Some useful definitions and theorems

Definition 1.11.1 *[108] A symmetric $n \times n$ real matrix M is said to be positive definite if the scalar $z^T M z$ is positive for every non-zero column vector z of n real numbers. Here z^T denotes the transpose of z.*

1.11.1 Lyapunov Stability

The state-space equation is given as follows

$$\frac{d}{dt}x(t) = f(x(t)), \tag{1.11.19}$$

where f is nonlinear vector valued function.

A function $V(x)$ is positive definite, if it satisfies the following conditions [99]

1. The funciton $V(x)$ has continuous partial derivatives with respect to the element of the state x.
2. $V(x^*) = 0$.
3. $V(x) > 0$ if $x \in \boldsymbol{N} - x^*$

where $\boldsymbol{N}$ is a small neighborhood around $\bar{x}$.

Lyapunov's theorems on the stability and asymptotic stability of the state-space equation (1.11.19), describing an autonomous nonlinear dynamic system with state vector $x(t)$ and equilibrium state $\bar{x}$, were stated as follows:

Theorem 1.11.1 *[99] The equilibrium state x^* is stable if, in a small neighborhood of x^*, there exists a positive-definite function V(x) such that derivative with respect to time is negative semidefinite in that region.*

Theorem 1.11.2 *[99] The equilibrium state x^* is asymptotically stable if, in a small neighborhood of x^*, there exists a positive-definite function V(x) such that derivative with respect to time is negative definite in that region.*

1.12 Organization of the Thesis

This thesis is organized as follows. In Chapter 2, we study a model including both delays and piecewise constant argument. It is the first time that global exponential stability of equilibrium of Hopfield neural networks model with both delays and piecewise constant argument is considered. The existence and uniqueness of the equation (2.2.12)-(2.2.13) are considered step by step on intervals $[\theta_i, \theta_{i+1})$, $i \in Z$. We assume without loss of generality that $\theta_i \leq \sigma \leq \theta_{i+1}$ and $i = 0$. We examine the solution $x(t)$, which satisfies the equation $x(t) = \varphi(t)$ for $[\sigma - \tau, \sigma]$ and consider the all different cases that can be varied according to the place of the ζ_i in the time intervals.

The main challenge of our study is to establish a relation between the constant delay and β type piecewise constant argument like in the previous studies. But it can not be possible to find it, so we look for another approach to investigate the stability properties of our system. This is linear matrix inequality method. A linear matrix inequality method has been used to obtain the global exponential stability of equilibrium point of the system because of its efficiency. The presence of fast linear matrix inequality solvers has increased the usage of this method. In the control problems, it is preferred that converting the problem to a linear matrix inequality to instead of finding an analytic solution for it. Because solving linear matrix inequalities is easy, feasible and fast.

In Chapter 3, the existence and uniqueness of the equation (2.2.12)-(2.2.13) are considered step by step on intervals $[\theta_i, \theta_{i+1})$, $i \in Z$. We assume without loss of generality that $\theta_i \leq \sigma \leq \theta_{i+1}$ and $i = 0$. We examine the solution $x(t)$, which satisfies the equation $x(t) = \varphi(t)$ for $[\sigma - \tau, \sigma]$ and consider the all different cases that can be varied according to the place of the ζ_i in the time intervals. The crucial point about this chapter is that an LMI method has been extended to a multi-compartmental structure to investigate the stability of the system. In the literature, some of the papers consider only delays, some consider only piecewise constant argument. It is important to emphasize that this is the first time that both delay and piecewise constant argument involved in the models and this requests the development of LMI method to multi-compartmental case. The last chapter is allocated to consequences and possible future plans.

CHAPTER 2

STABILITY OF HOPFIELD NEURAL NETWORKS WITH DELAY

2.1 Introduction

The formulation of continuous Hopfield neural networks [103] is represented by the following equations:

$$C_i \frac{du_i(t)}{dt} = -\frac{u_i(t)}{R_i} + \sum_{j=1}^{n} T_{ij} g_j(u_j(t)) + I_i, \quad i = 1, 2, \cdots, n, \tag{2.1.1}$$

where C_i is the input capacitance of the cell membrane, R_i is the transmembrane resistance, T_{ij} stands for the connection strength between the neurons i and j, $u_i(t)$ stands for the state vector of the ith unit at time t, $g_j(u_j(t))$ denote the activation function corresponding to the unit j at time t and I_i is the external constant input to neuron i. Also the original Hopfield neural network model can be formulated as follows:

$$y_i'(t) = -a_i y_i(t) + \sum_{j=1}^{n} b_{ij} f_j(y_j(t)), \tag{2.1.2}$$

for $i = 1, \cdots, n$, where $a_i \geq 0$, y_j is the state variable, b_{ij} interconnection weights from neuron j to neuron i and f_j denotes the activation functions.

Up to know this model has been modified in numerous studies [46, 48, 49], [61]-[64], [88, 92, 104, 105, 125, 129, 134, 163, 181, 192, 208, 213, 215, 216, 220]. For example, several kinds of time delays were added to the models. The following system

with constant delays was introduced by Marcus and Westervelt [141]

$$y_i'(t) = -a_i(t)y_i(t) + \sum_{j=1}^{n} b_{ij} f_j(y_j(t)) + \sum_{j=1}^{n} b_{ij} f_j(y_j(t-\tau_j)), \tag{2.1.3}$$

for $i = 1, \cdots, n$.

Mohamad and Gopalsamy considered the following model [144]:

$$y_i'(t) = -a_i y_i(t) + \sum_{j=1}^{n} b_{ij} f_j(y_j(t)) + \sum_{j=1}^{n} c_{ij} f_j(y_j(t-\tau_{ij})) + I_i, \tag{2.1.4}$$

for $i = 1, \cdots, n$. They used Lyapunov functionals then obtained delay independent conditions for the stability of the network.

Neural networks with time varying delays were studied deeply in recent years. Exponential stability, asymptotic stability, existence and uniqueness of solutions of them have been analyzed by many authors. Further studies were taken about the following model with time variable delay [33, 81, 145, 202, 213, 215]

$$y_i'(t) = -a_i(t)y_i(t) + \sum_{j=1}^{n} b_{ij} f_j(y_j(t)) + \sum_{j=1}^{n} b_{ij} f_j(y_j(t-\tau_j(t))), \tag{2.1.5}$$

for $i = 1, \cdots, n$.

Furthermore distributed time-delays, have begun to attract the researchers' attention. In [181], an application of distributed time delay was given by Tank and Hopfield. There have been so many results on the stability analysis of various neural networks with distributed time-delays, such as recurrent neural networks, bidirectional associative memory networks, Hopfield neural networks, cellular neural networks [45, 68, 92].

In [192], they worked on the robust global stability analysis for generalized neural networks with both discrete and distributed delays. The model was represented by the following equations

$$y'(t) = -Ky(t) + AF(y(t-\tau_1)) + B\int_{t-\tau_1}^{t} H(y(s))ds, \tag{2.1.6}$$

where $\tau_1, \tau_2 > 0$, $y(t) = (y_1(t), \cdots, y_n(t))^T \in \mathbb{R}^n$ was the state variable, $K = diag(k_1, \cdots, k_n)$ is a diagonal matrix $(k_i > 0)$, $A = (a_{ij})_{n\times n}$ and $B = (b_{ij})_{n\times n}$

were connection weight matrices. The activation functions were $F(y(t-\tau_1)) = (f_1(y_1(t-\tau_1)), \cdots, f_n(y_n(t-\tau_1)))^T$ and $H(y(t)) = (h_1(y_1(t)), \cdots, h_n(y_n(t)))^T$.

In [133], generalized neural networks which include multiple discrete delays and multiple distributed delays were investigated and they were represented as the following equations.

$$\begin{aligned} y'(t) &= -Ay(t) + \sum_{k=1}^{r} B^{(k)} f(y(t-\tau_k(t))) + \\ &\quad + \sum_{m=1}^{q} C^{(m)} \int_{t-\bar{\tau}_m(t)}^{t} g(y(s))ds + I, \end{aligned} \tag{2.1.7}$$

where $\tau_k(t)$ and $\bar{\tau}_m(t)$ were time-varying delays. $A = (diag(a_1, \cdots, a_n)$ was positive diagonal matrix, $B^{(k)} = ({b_{ij}}^{(k)})_{n\times n}$ and $C^{(m)} = ({c_{ij}}^{(m)})_{n\times n}$ were connection weight matrices. $y(t)$ denoted state variable, $f(y(t-\tau_k)) = (f_1(y_1(t-\tau_k(t))), \cdots, f_n(y_n(t-\tau_k(t))))$ and $g(y(t)) = (g_1(y_1(t)), \cdots, h_n(y_n(t)))^T$ denoted activation functions. $I = [I_1, \cdots, I_n]$ was constant external input.

In both [133] and [192], the activation functions satisfied a more general assumption in place of Lipschitz condition. Also they used Lyapunov stability and a linear matrix inequality to obtain sufficient criteria for global robust stability.

Recently, the differential equations with piecewise constant argument have been studied in many papers [26, 76, 114, 154, 191, 195, 207, 211, 222]. The main idea of differential equation with piecewise constant argument is combining the continuous and discrete dynamical systems. With this view, it is important for the modeling the biological and computer sciences problems. This type of differential equations have been under investigation since 1980s. Busenberg and Cooke firstly introduced the piecewise constant argument in 1982 [43]. Cooke and Wiener, Wiener, Shah and Wiener have studied the type of differential equations [68, 69, 70, 171, 196]. This theory was improved for the neural networks in the studies [9, 12, 15, 16, 20, 21, 25, 26, 60, 157, 189, 199, 210]. Neural networks with piecewise constant argument have been introduced into the following form [21]

$$y_i'(t) = -a_i y_i(t) + \sum_{j=1}^{n} b_{ij} f_j(y_j(t)) + \sum_{j=1}^{n} c_{ij} g_j(y_j(\beta(t))) + d_i, \tag{2.1.8}$$

for $i = 1, \cdots, n$ where $a_i > 0$, b_{ij}, c_{ij} were connection weights, d_i was external input, $f_j(y_j(t)))$ and $g_j(y_j(\beta(t)))$ were activation functions. Qualitative properties of this neural network system, such that existence and uniqueness of solutions, stability of equilibrium, existence and stability of periodic solutions were investigated.

In implementation of neural network models to real world problems, stability of them has a primary importance. So, the stability analysis of neural network systems is crucial. The linear matrix inequalities have been frequently used for the stability analysis of the neural networks as well as they have been used for dynamical systems. Many stability criteria based on LMI have been derived in the literature for different Hopfield neural network models because of the efficiency of this method [135, 173]. Also this technique has been used in control theory [42, 159].

In this chapter, we study on a model including both delays and piecewise constant argument. It is the first time that global exponential stability of equilibrium of Hopfield neural networks model with both delays and piecewise constant argument is considered.

2.2 Preliminaries

Let $\mathbb{N}$ and $\mathbb{R}^+$ denotes the natural and nonnegative real numbers, respectively. The notation $X > 0$ (or $X < 0$) denotes that X is a symmetric and positive definite (or negative definite) matrix. The notations X^T and X^{-1} refer, respectively, the transpose and the inverse of a square matrix X. $\lambda_{max}(X)$ and $\lambda_{min}(X)$ represent the maximal eigenvalue and minimal eigenvalue of X, respectively. The norm $\|\cdot\|$ means either one-norm: $\|x\|_1 = \sum_{i=1}^{n} |x_i|,\ x \in R^n$ or the induced matrix 2-norm: $\|X\|_2 = \sqrt{\lambda_{max}(X^T X)}$. Let θ_i, and ζ_i, denote two fixed real-valued sequences such that $\theta_i < \theta_{i+1}$, $\theta_i \leq \zeta_i \leq \theta_{i+1}$ for all $i \in N$, with $\theta_i \to \infty$ as $i \to \infty$. Throughout the paper, we assume that there exists a positive constant $\bar{\theta}$ such that $\theta_{i+1} - \theta_i \leq \bar{\theta},\ i \in N$.

In this section, we will consider the description of the following neural network with piecewise argument and constant delay:

$$y'(t) = -Ay(t) + Bg(y(t)) + Cg(y(\beta(t))) + Dg(y(t-\tau)) + E, \quad (2.2.9)$$

where $\beta(t) = \theta_k$ if $t \in [\theta_k, \theta_{k+1})$, $k \in \mathbb{N}$, $t \in \mathbb{R}^+$, $y = [y_1, \cdots, y_n]^T \in \mathbb{R}^n$ is the neuron state vector, $g(y(t)) = [g_1(y_1(t)), \cdots, g_n(y_n(t))]^T \in \mathbb{R}^n$ is the activation function of neurons, $E = [E_1, \cdots, E_n]^T$ is an external input vector.

Additionally, we have $A = diag(a_1, \cdots, a_n)$ where $a_i > 0$, $B = (b_{ij})_{n\times n}$, $C = (c_{ij})_{n\times n}$, $D = (d_{ij})_{n\times n}$, denote the connection weight matrices.

(A1) The activation function g satisfies $g(0) = 0$;

(A2) There exists Lipschitz constant

$$L = diag(L_1, \cdots, L_n) > 0,$$

such that

$$|g_i(u) - g_i(v)| \leq L_i|u - v|,$$

for all $u, v \in R^n,\ i = 1, 2, \ldots, n$;

(A3) The activation function g is bounded, i.e. for some constant $M > 0$, $|g(y(t))| < M$, for all $t \in \mathbb{R}$ and $y \in \mathbb{R}$;

(A4) $\bar{\theta} < \tau$.

Consider the equilibrium point, $y^* = (y_1^*, \cdots, y_n^*)^T$, of the system (2.2.9).

Theorem 2.2.1 *Suppose that the assumptions $(A1), (A2)$ and $(A3)$ are fulfilled. If*

$$a_i > L_i \sum_{j=1}^{n} (|b_{ji}| + |c_{ji}| + |d_{ji}|), \quad i = 1, 2, \ldots, n, \tag{2.2.10}$$

then system (2.2.9) has a unique equilibrium point.

Proof. Step 1: Existence:If $y^* = (y_1^*, y_2^*, \cdots, y_n^*)$ is an equilibrium point of the system (2.2.9), then each y_i^* satisfies the following equation:

$$y_i^* = \frac{1}{a_i}\left[\sum_{j=1}^{n} b_{ij} g_j(y_j^*) + \sum_{j=1}^{n} c_{ij} g_j(y_j^*) + \sum_{j=1}^{n} d_{ij} g_j(y_j^*)\right] + \frac{E_i}{a_i}, \quad i = 1, 2, \cdots, n.$$

Consider a mapping $H(y) = (H_1(y), H_2(y), \cdots, H_n(y))^T$. Denote

$$y_i^* = H_i(y^*) = \frac{1}{a_i}\sum_{j=1}^{n}\left[(b_{ij} + c_{ij} + d_{ij})\right] g_j(y_j^*) + \frac{E_i}{a_i}, \quad i = 1, 2, \cdots, n.$$

Thus, y^* is a fixed point of the map $H : \mathbb{R}^n \to \mathbb{R}^n$. The i-th component of the function $H(y)$ satisfies the following inequality

$$\begin{aligned} |H_i(y^*)| &= |\frac{1}{a_i}\sum_{j=1}^{n}\left[(b_{ij} + c_{ij} + d_{ij})\right] g_j(y_j^*) + \frac{E_i}{a_i}| \\ &\leq \frac{1}{a_i}\sum_{j=1}^{n}|\left[(b_{ij} + c_{ij} + d_{ij})\right]||g_j(y_j^*)| + |\frac{E_i}{a_i}| \\ &\leq \frac{1}{a_i}\sum_{j=1}^{n}|\left[(b_{ij} + c_{ij} + d_{ij})\right]|M + \frac{|E_i|}{a_i}, \end{aligned}$$

where $y^* = (y_1^*, y_2^*, \cdots, y_n^*)^T$. Then we have

$$|H_i(y^*)| \leq \max_{1\leq i\leq n}\frac{1}{a_i}\sum_{j=1}^{n}|\left[(b_{ij} + c_{ij} + d_{ij})|\right] M + \frac{|E_i|}{a_i}, for \;\; i = 1, 2, \cdots, n.$$

$H : R^n \to \mathbb{R}^n$ is bounded for all $y \in \mathbb{R}^n$. Also we can easily say that H is continuous. From Brouwer's fixed point theorem, H has at least one fixed point.

Step 2: Uniqueness: Suppose that there exists another fixed point denoted z^*. Then

$$a_i(y_i^* - z_i^*) = \sum_{j=1}^{n}(b_{ij} + c_{ij} + d_{ij})(g_j(y_j^*) - g_j(z_j^*)).$$

From conditions $(A1)$-$(A3)$ and $a > 0$,

$$a_i|y_i^* - z_i^*| - \sum_{j=1}^{n}(|b_{ij}| + |c_{ij}| + |d_{ij}|)L_j|y_j^* - z_j^*| \leq 0, \; i \in I,$$

and hence

$$\sum_{i=1}^{n}\left\{a_i - \sum_{j=1}^{n}(|b_{ij}| + |c_{ij}| + |d_{ij}|)L_j\right\}|y_i^* - z_i^*| \leq 0. \tag{2.2.11}$$

Consequently from (2.2.10) we obtain $y_i^* = z_i^*$. So there exists a unique equilibrium. The theorem is proved.

Now, we will consider the following initial value problem

$$y'(t) = -Ay(t) + BG(y(t)) + CG(y(\beta(t))) + DG(y(t-\tau)) + E, \quad (2.2.12)$$

$$y(t) = \varphi(t),\ \sigma - \tau \leq t \leq \sigma, \quad (2.2.13)$$

where $\beta(t) = \theta_k$ if $t \in [\theta_k, \theta_{k+1})$, $k \in \mathbb{N}$, $t \in \mathbb{R}^+$ and $\varphi(t)$ is a continuous function.

Theorem 2.2.2 *Assume that the conditions $(A1) - (A4)$ are hold. Then for every $(\sigma, \varphi) \in \mathbb{R}^+ \times \mathbb{R}^n$, there exists a unique solution $y(t) = y(t, \sigma, \varphi)$ of (2.2.12)-(2.2.13), such that $y(\sigma) = \varphi(\sigma)$ on $\mathbb{R}^+$.*

Proof. Existence: Equation (2.2.12)-(2.2.13) can be investigated step by step on intervals $[\theta_i, \theta_{i+1})$, $i \in Z$. We assume without loss of generality that $\theta_i \leq \sigma \leq \theta_{i+1}$ and $i = 0$. We are looking for the solution $x(t)$, which satisfies the equation $y(t) = \varphi(t)$ for $[\sigma - \tau, \sigma]$. Consider the following cases:

(a) Assume that there exists an integer j such that $\theta_j \leq \sigma + \tau < \theta_{j+1}$, $j > 1$. We will show that there exists a unique solution on the interval $[\sigma, \sigma + \tau)$. For $t \in [\sigma, \theta_1)$, $y(t)$ satisfies the following equation

$$y'(t) = -Ay(t) + BG(y(t)) + CG(\varphi(\sigma)) + DG(\varphi(t-\tau)) + E. \quad (2.2.14)$$

Since the equation is quasilinear, with Lipschitzian nonlinear part, the solution exists, unique and is continuable to θ_1. For each $i < j$, $y(t)$ satisfies the following equation

$$y'(t) \;=\; -Ay(t) + BG(y(t)) + CG(y(\theta_i)) + DG(y(t-\tau)) + E.$$

on the interval $[\theta_i, \theta_{i+1}]$. Consequently, repeating the discussion for the first interval, one can continue the solution till θ_j. Now, consider $t \in [\theta_j, \sigma + \tau)$. Again, similarly to the previous intervals one can show that the solution exists on $[\theta_j, \sigma + \tau)$.

(b) Now, assume that $\sigma + \tau < \theta_1 < \sigma + 2\tau$. Consider the interval $[\sigma, \sigma + \tau)$, then $y(t)$ satisfies the following quasilinear differential equation

$$y'(t) \quad = \quad -Ay(t) + BG(y(t)) + CG(\varphi(\sigma)) + DG(\varphi(t-\tau)) + E.$$

It is obvious that the solution exists and is unique on the interval $[\sigma, \sigma + \tau)$. Now for $t \in [\sigma + \tau, \theta_1)$, $y(t)$ satisfies the following equation;

$$y'(t) \quad = \quad -Ay(t) + BG(y(t)) + CG(y(\sigma + \tau)) + DG(y(t-\tau)) + E.$$

The above equation is a quasilinear ordinary differential equation, since $y(\sigma + \tau)$ and $y(t - \tau)$ are known from the previous step. So, there exists a solution on $[\sigma + \tau, \theta_1)$.

One can see that by combination of the two cases, (a) and (b) the solution is continuable uniquely on the interval $[\sigma, \infty)$.

The theorem is proved.

Definition 2.2.1 *The equilibrium $y = y^*$ of (2.2.9) is globally exponentially stable if there exist positive constants α_1 and α_2 such that*

$$||y(t)|| \leq \alpha_1 e^{-\alpha_2 t} \sup_{-\tau \leq \xi \leq 0} ||y(\xi)||.$$

If we use the transformation $u(t) = y(t) - y^*$, system (2.2.9) can be written as

$$u'(t) \quad = \quad -Au(t) + BG(u(t)) + CG(u(\beta(t))) + DG(u(t-\tau)), \quad (2.2.15)$$

where $G_j(u_j(t)) = g_j(u_j(t) + y_i^*) - g_j(y_j^*)$, with $g_j(0) = 0$.

It is trivial that the stability of the zero solution of (2.2.15) is equivalent to that of the equilibrium x^* of (2.2.9). So, we will consider the stability of the zero solution of (2.2.15).

Lemma 2.2.1 *[42] Given any real matrices $U_1,\ U_2,\ W$ of appropriate dimensions and a scalar $\epsilon > 0$ such that $0 < W = W^T$, then the following matrix inequality is true:*

$$U_1^T U_2 + U_2^T U_1 \leq \epsilon U_1^T W U_1 + \frac{1}{\epsilon} U_2^T W^{-1} U_2.$$

2.3 Stability of equilibrium

Theorem 2.3.1 *Let the assumptions (A1)-(A4) hold true. The equilibrium y^* of (2.2.15) is globally exponentially stable, if there exist matrices $P > 0$, $Q > 0$ and two diagonal matrices $R > 0$, $S > 0$ such that the following LMI holds;*

$$\begin{pmatrix} AP + PA - PBRB^T P - L(R^{-1} + Q + S)L & -PC & -PD \\ -C^T P & S & 0 \\ -D^T P & 0 & Q \end{pmatrix} > 0 \quad (2.3.16)$$

Proof. Firstly we choose a functional candidate for system (2.2.15) as below

$$V(u_t) = u^T(t)Pu(t) + \int_{t-\tau}^{t} G^T(u(\xi))QG(u(\xi))d\xi + \int_{\beta(t)}^{t} G^T(u(\xi))SG(u(\xi))d\xi.$$

Then we will find the time derivative of $V(u_t)$ along the trajectories of system (2.2.15) for $t \neq \theta_i$,

$$
\begin{aligned}
\dot{V}(u_t) &= \dot{u}^T(t)Pu(t) + u^T(t)P\dot{u}(t) + G^T(u(t))QG(u(t)) - \\
&\quad -G^T(u(t-\tau))QG(u(t-\tau)) + G^T(u(t))SG(u(t)) - \\
&\quad -G^T(u(\beta(t)))SG(u(\beta(t))) \\
&= [-Au(t) + BG(u(t)) + CG(u(\beta(t))) + DG(u(t-\tau))]^T Pu(t) + \\
&\quad +u^T(t)P\left[-Au(t) + BG(u(t)) + CG(u(\beta(t))) + DG(u(t-\tau))\right] + \\
&\quad +G^T(u(t))QG(u(t)) - G^T(u(t-\tau))QG(u(t-\tau)) + \\
&\quad +G^T(u(t))SG(u(t)) - G^T(u(\beta(t)))SG(u(\beta(t))) \\
&= -u^T(t)(A^TP + PA)u(t) + G^T(u(t))B^TPu(t) + \\
&\quad +G^T(u(\beta(t)))C^TPu(t) + G(u(t-\tau))D^TPu(t) + \\
&\quad +u^T(t)PBG(u(t)) + u^T(t)PCG(u(\beta(t))) + \\
&\quad +u^T(t)PDG(u(t-\tau)) + G^T(u(t))QG(u(t)) - \\
&\quad -G^T(u(t-\tau))QG(u(t-\tau)) + \\
&\quad +G^T(u(t))SG(u(t)) - G^T(u(\beta(t)))SG(u(\beta(t))). \qquad (2.3.17)
\end{aligned}
$$

It follows from Lemma (2.2.1),

$$
u^T(t)PBG(u(t)) + G^T(u(t))B^TPu(t) \leq u^T(t)PBRB^TPu(t) + G^T(u(t))R^{-1}G(u(t)). \qquad (2.3.18)
$$

Substituting (2.3.18) into (2.3.17), we have

$$
\begin{aligned}
\dot{V}(u(t), G(u(\beta(t))), G(u(t-\tau))) &\leq u^T(t)(-AP - PA + PBRB^TP + \\
&\quad +L(R^{-1} + Q + S)L)u(t) + \\
&\quad +G^T(u(\beta(t)))C^TPu(t) + u^T(t)PCG(u(\beta(t))) + \\
&\quad +G^T(u(t-\tau))D^TPu(t) + u^T(t)PDG(u(t-\tau)) + \\
&\quad -G^T(u(\beta(t)))SG(u(\beta(t))) \\
&\quad -G^T(u(t-\tau))QG(u(t-\tau)).
\end{aligned}
$$

Then we obtain

$$\dot{V}(u_t) \quad \leq \quad -\eta(t)\Sigma\eta^T(t), \tag{2.3.19}$$

where $\eta(t) = \begin{bmatrix} u^T(t) & G^T(u(\beta(t))) & G^T(u(t-\tau)) \end{bmatrix}$, and

$$\Sigma = \begin{pmatrix} AP + PA - PBRB^TP - L(R^{-1} + Q + S)L & -PC & -PD \\ -C^TP & S & 0 \\ -D^TP & 0 & Q \end{pmatrix}.$$

Now we will prove the global exponential stability of the solution. Note that $\ell = \max\limits_{1\leq i\leq n}\{L_i\}$ for $i = 1, \cdots, n$ and

$$\begin{aligned} V(u_t) \quad &\leq \quad \lambda_{max}(P)||u(t)||^2 + \\ &\quad +\lambda_{max}(Q)\ell^2 \int_{t-\tau}^{t} ||u(\xi)||^2 d\xi + \lambda_{max}(S)\ell^2 \int_{\beta(t)}^{t} ||u(\xi)||^2 d\xi. \end{aligned}$$

From (2.3.16) and (2.3.19), one can see that there exists a scalar $m > 0$ such that

$$\begin{pmatrix} AP + PA - PBRB^TP - L(R^{-1} + Q + S)L - mI & -PC & -PD \\ -C^TP & S & 0 \\ -D^TP & 0 & Q \end{pmatrix} > 0.$$

Then we can obtain easily the following equation for any scalar $c > 0$,

$$\begin{aligned} \frac{d}{dt}(e^{ct}V(u_t)) \quad &= \quad e^{ct}[b(V(u_t)) + \dot{V}(u_t)] \\ &\leq \quad e^{ct}\left[(c\lambda_{max}(P) - m)||u(t)||^2 + c\lambda_{max}(Q)\ell^2 \int_{t-\tau}^{t} ||u(\xi)||^2 d\xi + \right. \\ &\quad \left. +\lambda_{max}(Q)\ell^2 \int_{\beta(t)}^{t} ||u(\xi)||^2 d\xi\right] \\ &\leq \quad e^{ct}\left[(c\lambda_{max}(P) - m)||u(t)||^2 + 2c\lambda_{max}(Q)\ell^2 \int_{t-\tau}^{t} ||u(\xi)||^2 d\xi\right]. \end{aligned}$$

By intergating two sides from 0 to $T > 0$, we obtain

$$\begin{aligned} e^{cT}V(u_T) - V(u_0) \quad &\leq \quad (c\lambda_{max}(P) - m)\int_0^T e^{ct}||u(t)||^2 dt + \\ &\quad +2c\lambda_{max}(Q)\int_0^T \int_{t-\tau}^{t} e^{ct}||u(\xi)||^2 d\xi dt. \end{aligned}$$

One can see that easily

$$\begin{aligned}\int_0^T \int_{t-\tau}^t e^{ct}||u(\xi)||^2 d\xi dt &\leq \tau \int_{-\tau}^T e^{c(t+\tau)}||u(t)||^2 dt \\ &\leq \tau e^{c\tau} \int_{-\tau}^0 ||u(t)||^2 dt + \\ &\quad +\tau e^{c\tau} \int_0^T e^{ct}||u(t)||^2 dt.\end{aligned}$$

Then we obtain

$$\begin{aligned}e^{cT}V(u_T) &\leq (c\lambda_{max}(P) - m + 2c\lambda_{max}(Q)\ell^2\tau e^{c\tau}) \int_0^T e^{ct}||u(t)||^2 dt + \\ &\quad +2c\lambda_{max}(Q)\ell^2\tau e^{c\tau} \int_{-\tau}^0 ||u(t)||^2 dt + V(u_0)\end{aligned}$$

By choosing a scalar $c > 0$ such that $m = c\lambda_{max}(P) + 2c\lambda_{max}(Q)\ell^2\tau e^{c\tau}$, we have

$$e^{cT}V(u_T) \leq 2c\lambda_{max}(Q)\ell^2\tau e^{c\tau} \int_{-\tau}^0 ||u(t)||^2 dt + V(u_0) \tag{2.3.20}$$

We know from definition of the $V(u_t)$, $V(u_0)$ satisfies the following inequality

$$V(u_0) \leq \lambda_{max}(P)||u_0||^2 + \lambda_{max}(Q)\ell^2 \int_{-\tau}^0 ||u(\xi)||^2 d\xi \tag{2.3.21}$$

Substituting (2.3.21) into (2.3.20), we have

$$e^{cT}V(u_T) \leq (2c\lambda_{max}(Q)\ell^2\tau^2 e^{c\tau} + \lambda_{max}(P) + \lambda_{max}(S)\ell^2\tau) \sup_{-\tau\leq\xi\leq 0} ||u(\xi)||^2.$$

Also we know from (2.3.20), $\lambda_{min}(P)||u(T)||^2 \leq V(u_T)$.

Consequently, we have

$$||u_T)|| \leq \sqrt{\frac{2c\lambda_{max}(Q)\ell^2\tau^2 e^{c\tau} + \lambda_{max}(P) + \lambda_{max}(S)\ell^2\tau}{\lambda_{min}(P)}} e^{-cT/2} \sup_{-\tau\leq\xi\leq 0} ||u(\xi)||^2.$$

The theorem is proved.

2.4 An Illustrative Example

Consider the system with piecewise constant argument.

$$\begin{aligned} x^{'}(t) &= -\begin{pmatrix} 0.1 & 0 \\ 0 & 0.1 \end{pmatrix}\begin{pmatrix} x_1(t) \\ x_2(t) \end{pmatrix} + \begin{pmatrix} 0.01 & 0.02 \\ 0.03 & 0.01 \end{pmatrix}\begin{pmatrix} tanh(x_1(t)) \\ tanh(x_2(t)) \end{pmatrix} \\ &+ \begin{pmatrix} 0.01 & 0.02 \\ 0.02 & 0.03 \end{pmatrix}\begin{pmatrix} tanh(x_1(\beta(t))) \\ tanh(x_2(\beta(t))) \end{pmatrix}. \end{aligned} \tag{2.4.22}$$

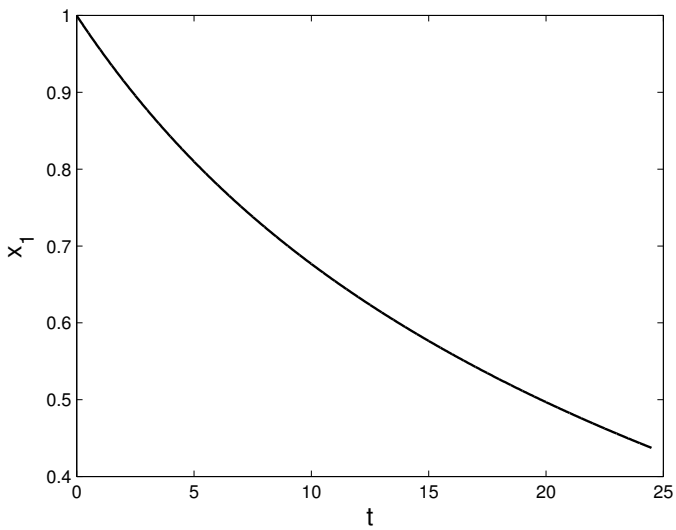

Figure 2.1: Time response of $x_1(t)$ with piecewise constant arguments

Here the coefficients of the delay terms in the main model has been chosen zero. If $L_1 = 0.1$ and $L_2 = 0.1$, it can be shown easily that (2.4.22) satisfies the condition of Theorem 2.1. So there exists a unique equilibrium of (2.4.22) such that $y^* = [0.4372, 0.6623]^T$. For

$$P = \begin{pmatrix} 1.5 & 1 \\ 1 & 1.5 \end{pmatrix}, Q = \begin{pmatrix} 2 & 0 \\ 0 & 2 \end{pmatrix}, R = \begin{pmatrix} 3 & 0 \\ 0 & 3 \end{pmatrix}, S = \begin{pmatrix} 2 & 0 \\ 0 & 2 \end{pmatrix},$$

the condition of the Theorem 4.1 is satisfied. So, the equilibrium of the system (2.4.22) is globally exponentially stable. In Fig.2.1 and Fig.2.2, the simulation shows that the trajectory with initial point $[1, 2]^T$ approaches to the equilibrium $[0.4372, 0.6623]^T$ as time increases.

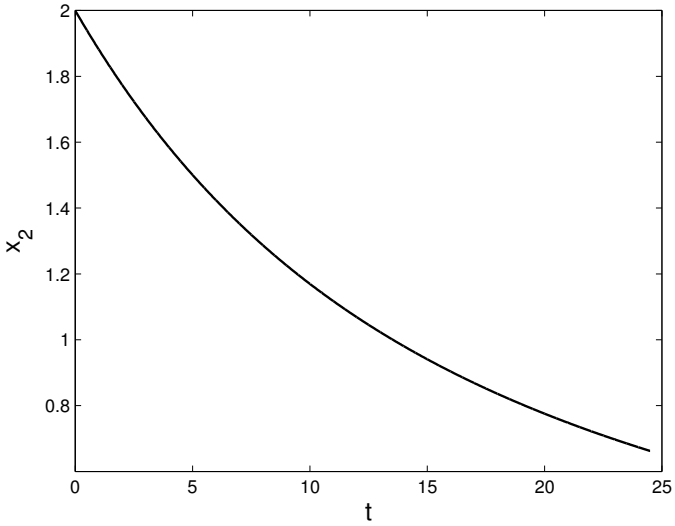

Figure 2.2: Time response of $x_2(t)$ with piecewise constant arguments

2.5 Conclusion

In this chapter, the Hopfield neural network with piecewise constant argument and constant delay has been considered. Up to now, various kinds of delays were introduced to the Hopfield neural network systems such that constant delays, single time delays, time varying delays and distributed delays. Also the Hopfield neural networks model with piecewise constant argument were studied in the paper [20]. But it is the first time that Hopfield neural networks model with both piecewise constant argument and constant delay is considered. This combination provided a more realistic approximation to the real life problems. The existence and uniqueness of the equation (2.2.12)-(2.2.13) are considered step by step on intervals $[\theta_i, \theta_{i+1})$, $i \in Z$. We assume without loss of generality that $\theta_i \leq \sigma \leq \theta_{i+1}$ and $i = 0$. We examine the solution $x(t)$, which satisfies the equation $x(t) = \varphi(t)$ for $[\sigma - \tau, \sigma]$ and consider the all different cases that can be varied according to the place of the ζ_i in the time intervals. The main challenge of our study is to establish a relation between the constant delay and β type piecewise constant argument like in the previous studies. But it can not be possible to find it, so we look for another approach to investigate the stability properties of our system. This is linear matrix inequality method. A linear matrix inequality method has been used to obtain the global exponential stability of equilibrium point of the system because of its efficiency. The presence of fast linear matrix

inequality solvers has increased the usage of this method. In the control problems, it is preferred that converting the problem to a linear matrix inequality to instead of finding an analytic solution for it. Because solving linear matrix inequalities is easy, feasible and fast. In the light of this information we use a linear matrix inequality and a Lyapunov functional to obtain sufficient conditions for the stability of our system. Finally, we give an example and it's simulation to illustrate our results.

CHAPTER 3

A HOPFIELD NEURAL NETWORK WITH MULTI-COMPARTMENTAL ACTIVATION

3.1 Introduction

Hopfield neural network's [103] characteristics such as exponential stability, periodicity, almost periodicity, domain of attraction and convergence rate have been deeply investigated in the papers [46, 48, 49, 61, 62, 63, 64, 88, 105] and references therein. The following equations represents the model:

$$C_i \frac{du_i(t)}{dt} = -\frac{u_i(t)}{R_i} + \sum_{j=1}^{n} T_{ij} g_j(u_j(t)) + I_i, \qquad i = 1, 2, \cdots, n, \tag{3.1.1}$$

where C_i is the input capacitance of the cell membrane, R_i is the transmembrane resistance, T_{ij} stands for the connection strength between the neurons i and j, $u_i(t)$ stands for the state vector of the ith unit at time t, $g_j(u_j(t))$ denote the activation function corresponding to the unit j at time t and I_i is the external constant input to neuron i. The improvements on this network model have been boosted for many years [91, 125, 126, 145, 202, 213, 215]. Time delays often come upon in various types of systems such as mechanical systems, population models, neural networks etc. They affect the qualitative properties of the systems such as stability and oscillation. In neural systems, they can occur during propagation of the action potential along the axon or transmission of the electrical signal across the synapse [33, 65, 81]. So time delays are directly linked with conduction velocity, axon length, membrane structure and chemical kinetics.

Marcus and Westervelt, took into account a system with a single delay [141]. They analyzed the dynamics of continuous-time analog networks with delay and consider the following system:

$$\begin{aligned} C_i \frac{du_i(t)}{dt} &= -\frac{u_i(t)}{R_i} + \sum_{j=1}^{n} T_{ij} g_j(u_j(t-\tau)) + I_i, \\ & i = 1, 2, \cdots, n. \end{aligned} \tag{3.1.2}$$

Mohamad and Gopalsamy considered the following model:

$$y_i'(t) = -a_i y_i(t) + \sum_{j=1}^{n} b_{ij} f_j(y_j(t)) + \sum_{j=1}^{n} c_{ij} f_j(y_j(t-\tau_{ij})) + I_i, \tag{3.1.3}$$

for $i = 1, \cdots, n$. In [144], they used Lyapunov functionals then obtained delay independent conditions for the stability of the network.

Neural networks with time varying delays were studied deeply in recent years. Exponential stability, asymptotic stability, existence and uniqueness of solutions of them have been analyzed by many authors. Further studies were taken about the following model with time variable delay [145]-[33]

$$y_i'(t) = -a_i(t) y_i(t) + \sum_{j=1}^{n} b_{ij} f_j(y_j(t)) + \sum_{j=1}^{n} b_{ij} f_j(y_j(t-\tau_j(t))), \tag{3.1.4}$$

for $i = 1, \cdots, n$.

In [192], they worked on the robust global stability analysis for generalized neural networks with discrete and distributed delays. The model was presented by the following equations.

$$\dot{y(t)} = -Ky(t) + AF(y(t-\tau_1)) + B \int_{t-\tau_1}^{t} H(y(s))ds, \tag{3.1.5}$$

where $\tau_1, \tau_2 > 0$, $y(t) = (y_1(t), \cdots, y_n(t))^T \in \mathbb{R}^n$ was the state variable, $K = diag(k_1, \cdots, k_n)$ is a diagonal matrix ($k_i > 0$), $A = (a_{ij})_{n\times n}$ and $B = (b_{ij})_{n\times n}$ were connection weight matrices. The activation functions were $F(y(t-\tau_1)) = (f_1(y_1(t-\tau_1)), \cdots, f_n(y_n(t-\tau_1)))^T$ and $H(y(t)) = (h_1(y_1(t)), \cdots, h_n(y_n(t)))^T$.

In [133], they studied on the generalized neural networks. These networks included multiple discrete delays and multiple distributed delays. They were represented as

the following equations.

$$\begin{aligned} y'(t) &= -Ay(t) + \sum_{k=1}^{r} B^{(k)} f(y(t-\tau_k(t))) + \\ &\quad + \sum_{m=1}^{q} C^{(m)} \int_{t-\bar{\tau}_m(t)}^{t} g(y(s))ds + I, \end{aligned} \tag{3.1.6}$$

where $\tau_k(t)$ and $\bar{\tau}_m(t)$ were time-varying delays. $A = (diag(a_1, \cdots, a_n)$ was positive diagonal matrix, $B^{(k)} = ({b_{ij}}^{(k)})_{n\times n}$ and $C^{(m)} = ({c_{ij}}^{(m)})_{n\times n}$ were connection weight matrices. $y(t)$ denoted state variable, $f(y(t-\tau_k)) = (f_1(y_1(t-\tau_k(t))), \cdots, f_n(y_n(t-\tau_k(t))))$ and $g(y(t)) = (g_1(y_1(t)), \cdots, g_n(y_n(t)))^T$ denoted activation functions. $I = [I_1, \cdots, I_n]$ was constant external input.

In both [133] and [192], the activation functions satisfied a more general assumption in place of Lipschitz condition. Also they used Lyapunov stability and a linear matrix inequality to obtain sufficient criteria for global robust stability. The range of time delays diversified the modification of the model [29, 30, 94, 129, 133, 134, 192, 220]. In these studies, they give some conditions ensuring existence, uniqueness, and global asymptotic stability or global exponential stability of the equilibrium point of Hopfield neural network models with delays. Also Hopfield neural networks, Cohen-Grossberg neural networks and Bidirectional Associative Memory with delay are common in the literature [53, 54, 55, 56, 92, 136, 176, 209, 218, 219, 217]. Differential equations with piecewise constant argument have been under investigation for many years [195]. In many real world problems such as mechanical and biological systems, some actions on the systems can be considered as piecewise constants [17, 18, 207, 222]. Also piecewise constant argument represents both difference and differential equations. The notion of differential equations with piecewise constant argument of generalized type (EPCAG) is introduced in [17]. It was developed in the papers [19, 21, 25, 26, 42, 144, 157]. There are many interesting results and applications of this theory in [18]. Let us now consider reasons for the involvement of piecewise constant argument. It is important that piecewise constant argument is a deviated one [17]. It is seen, if we present $\gamma(t) = t - [t - \gamma(t)]$. Then $t - \gamma(t)$ is a deviation from t. Moreover, it is seen in Fig.(3.1) that deviated argument of alternating type that is delayed and advanced. This is why the biological reasons which are mentioned for delays inherit for the piecewise constant argument because of its

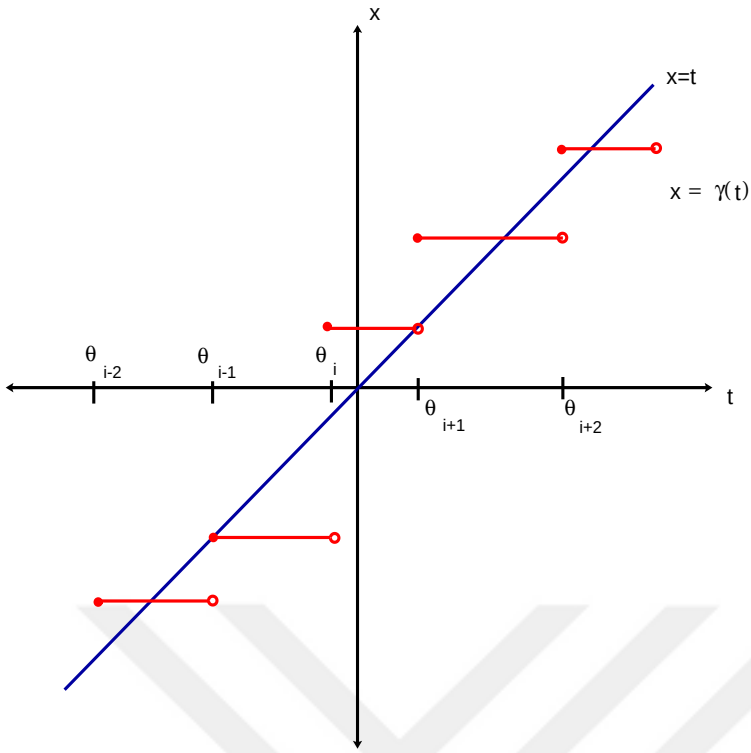

Figure 3.1: The graph of argument $\gamma(t)$ [18]

specificity. One can give more reasons to apply piecewise constant argument such as the discreteness of chemical processes in neurons. This discreteness relates to the threshold type dynamics in neural activity and sigmoid type activation function in the models.

In [195], recurrent neural networks which contain piecewise constant argument have been firstly introduced. Sufficient conditions are obtained for global exponential stability of the equilibrium point by using Lyapunov function technique for the following model:

$$\begin{aligned} x_i'(t) &= -a_i x_i(t) + \sum_{j=1}^{n} b_{ij} g_j(x_j(t)) + \\ &\quad + \sum_{j=1}^{n} c_{ij} g_j(x_j(\gamma(t))) + I_i, \end{aligned} \tag{3.1.7}$$

for $i = 1, \cdots, n$. In this chapter, we take into account the Hopfield neural networks with both the delay and piecewise constant argument of generalized type. It is the first time that Hopfield neural networks with a constant delay and piecewise constant argument of generalized type are considered. In the model of neural networks, we may assume that the values of the voltage can not only be evaluated by a neural

network continuously but fixed in some discrete moments of time. This may occur in the evolution of the brain during the practical activity.

We also use Lyapunov function theory to get the stability criteria in terms of LMIs. The LMI method is an efficient and popular method for studying for the stability of neural networks [112, 126, 151, 170, 186, 217]. In [133] and [192], LMI method was considered with several constant delays. In this chapter, we consider a different case when activation depends on a constant delay and piecewise constant argument. So we extended the LMI technique and developed the method for a more complex situation. In our LMI, there is a 3×3 matrix and its corresponding vectors including the activation function with time t, time delay and the piecewise constant argument. This multi-compartmental structure in the inequality may facilitate the analysis of the qualitative properties of the more complex neural network systems.

3.2 Preliminaries

Let $\mathbb{N}$ and $\mathbb{R}^+$ denote the sets of natural and nonnegative real numbers, respectively. The notation $X > 0$ (or $X < 0$) means that X is a symmetric and positive definite (or negative definite) matrix. The notations X^T and X^{-1} represent, respectively, the transpose and the inverse of a square matrix X. $\lambda_{max}(X)$ and $\lambda_{min}(X)$ represent the maximal eigenvalue and minimal eigenvalue of X, respectively. The norm $\|\cdot\|$ denotes either one-norm: $\|x\|_1 = \sum_{i=1}^{n} |x_i|,\ x \in R^n$ or the induced matrix 2-norm: $\|X\|_2 = \sqrt{\lambda_{max}(X^T X)}$. Let θ_i, and ζ_i, denote two fixed real-valued sequences such that $\theta_i < \theta_{i+1}$, $\theta_i \leq \zeta_i \leq \theta_{i+1}$ for all $i \in N$, with $\theta_i \to \infty$ as $i \to \infty$. Throughout the paper, we assume that there exists a positive constant $\bar{\theta}$ such that $\theta_{i+1} - \theta_i \leq \bar{\theta},\ i \in N$.

Consider the description of the following neural network with piecewise constant

argument of generalized type and constant delay:

$$\begin{aligned} x_i'(t) &= -a_i x_i(t) + \sum_{j=1}^{n} b_{ij} g_j(x_j(t)) + \\ &\quad + \sum_{j=1}^{n} c_{ij} g_j(x_j(\gamma(t))) + \\ &\quad + \sum_{j=1}^{n} d_{ij} g_j(x_j(t-\tau)) + E_i, \\ &\quad i = 1, \cdots, n, \end{aligned} \tag{3.2.8}$$

where $\gamma(t) = \zeta_k$ if $t \in [\theta_k, \theta_{k+1})$, $k \in N$, $t \in R^+$, $x_i(t)$ is the neuron state vector, $g_j(x_j(t))$ is the activation function of neuron j at time t and $E = [E_1, \cdots, E_n]^T$ is an external constant input vector.

Additionally, we have $a_i > 0$ and b_{ij}, c_{ij}, d_{ij} are real constants, denote the connection weights. The equations in (3.2.8) have the *three compartmental activation* with coefficients b_{ij}, c_{ij} and d_{ij} respectively. In the first compartment, the activation utilizes values of x at the present time t. In the second, the argument is piecewise constant. In the third one, it is delayed.

(A1) The activation functions g_i satisfies $g_i(0) = 0$ for each $i = 1, 2, \ldots, n$;

(A2) There exists Lipschitz constant $L = diag(L_1, \cdots, L_n) > 0$, such that $|g_i(u) - g_i(v)| \leq L_i|u - v|$, for all $u, v \in R^n,\ i = 1, 2, \ldots, n$;

(A3) The activation function g_i is bounded, i.e. for some constant $M_i > 0$, $|g_i(x_i(t))| < M_i$, for all $t \in R$, $x \in R$ and $i = 1, 2, \ldots, n$;

(A4) $\bar{\theta} < \tau$.

Our brain consists of billions of cells. Each of these cells behaves as a complex system in itself. Every cell continually sends electrical signals to other cells and there are tens of thousands of connections between these cells. Building a model which represents the complex connections between the neurons may not be possible. But the main aim is to make the closest approach to the human brain structure. Because of the numerous numbers of cells and variety of connections, we have to say about multi-compartmental structure. We consider each sum which is located on the right

hand side of the main equation as a compartment. The compartments differ from each other since of the different types of arguments in x(.). Thus in our paper the multi-compartmental activation consists of the three sums. The activation function is used to determine the multi-compartmental activation. We apply this concept of multi-compartmental model to describe the variety of types of arguments in activation functions in a short way. The number of the compartments can be increased to any natural.

System (3.2.8) is a developed version of the Hopfield model by introducing a piecewise constant argument as well as a constant delay. Reasons for the development have been stated in [19, 20]. In a word, piecewise constant argument combines the continuous and discrete dynamical systems. One can suggest to investigate more general equations with functional dependence on the piecewise constant argument for the Hopfield model [103]. But this generalization makes the analysis far from the applications [103].

Denote the equilibrium point, $x^* = (x_1^*, \cdots, x_n^*)^T$, of the system (3.2.8).

Theorem 3.2.1 *Let the assumptions* $(A1), (A2)$ *and* $(A3)$ *are fulfilled. If*

$$a_i > L_i \sum_{j=1}^{n} (|b_{ji}| + |c_{ji}| + |d_{ji}|), \quad i = 1, 2, \ldots, n, \tag{3.2.9}$$

then system (3.2.8) has a unique equilibrium point.

Proof. Step 1: Existence: If $x^* = (x_1^*, x_2^*, \cdots, x_n^*)$ is an equilibrium point of the system (3.2.8), then each x_i^* satisfies the following equation:

$$x_i^* = \frac{1}{a_i}\left[\sum_{j=1}^{n} b_{ij} g_j(x_j^*) + \sum_{j=1}^{n} c_{ij} g_j(x_j^*) + \sum_{j=1}^{n} d_{ij} g_j(x_j^*)\right] + \frac{E_i}{a_i}, \quad i = 1, 2, \ldots, n. \tag{3.2.10}$$

Consider a mapping $H(x) = (H_1(x), H_2(x), \cdots, H_n(x))^T$. Denote

$$x_i^* = H_i(x^*) = \frac{1}{a_i} \sum_{j=1}^{n} \left[(b_{ij} + c_{ij} + d_{ij})\right] g_j(x_j^*) + \frac{E_i}{a_i}, \quad i = 1, 2, \cdots, n.$$

Thus, x^* is a fixed point of the map $H : R^n \to R^n$. The i-th component of the function $H(x)$ satisfies the following inequality

$$\begin{aligned} |H_i(x^*)| &= |\frac{1}{a_i}\sum_{j=1}^{n}[(b_{ij}+c_{ij}+d_{ij})]\, g_j(x_j^*) + \frac{E_i}{a_i}| \\ &\leq \frac{1}{a_i}\sum_{j=1}^{n}|\,[(b_{ij}+c_{ij}+d_{ij})]\,||g_j(x_j^*)| + |\frac{E_i}{a_i}| \\ &\leq \frac{1}{a_i}\sum_{j=1}^{n}|\,[(b_{ij}+c_{ij}+d_{ij})]\,|M + \frac{|E_i|}{a_i}, \end{aligned}$$

where $x^* = (x_1^*, x_2^*, \cdots, x_n^*)^T$. Then we have

$$|H_i(x^*)| \leq \max_{1\leq i\leq n}\frac{1}{a_i}\sum_{j=1}^{n}|\,[(b_{ij}+c_{ij}+d_{ij})|]\,M + \frac{|E_i|}{a_i}, for\ \ i = 1, 2, \cdots, n.$$

$H : R^n \to R^n$ is bounded for all $x \in R^n$. Also we can easily say that H is continuous. From Brouwer's Fixed Point Theorem, H has at least one fixed point.

Step 2: Uniqueness: Suppose that there exists another fixed point denoted y^*. Then

$$a_i(x_i^* - y_i^*) = \sum_{j=1}^{n}(b_{ij}+c_{ij}+d_{ij})(g_j(x_j^*) - g_j(y_j^*)).$$

From conditions $(A1)$-$(A3)$ and $a > 0$,

$$a_i|x_i^* - y_i^*| - \sum_{j=1}^{n}(|b_{ij}| + |c_{ij}| + |d_{ij}|)L_j|x_j^* - y_j^*| \leq 0,\ i \in I,$$

and hence

$$\sum_{i=1}^{n}\left\{a_i - \sum_{j=1}^{n}(|b_{ij}| + |c_{ij}| + |d_{ij}|)L_j\right\}|x_i^* - y_i^*| \leq 0. \tag{3.2.11}$$

Consequently from (3.2.9) we obtain $x_i^* = y_i^*$. So there exists a unique equilibrium. The theorem is proved.

Now consider the following initial value problem

$$\begin{aligned} x_i'(t) &= -a_i x_i(t) + \sum_{j=1}^{n} b_{ij} g_j(x_j(t)) + \\ &+ \sum_{j=1}^{n} c_{ij} g_j(x_j(\gamma(t))) + \\ &+ \sum_{j=1}^{n} d_{ij} g_j(x_j(t-\tau)) + E_i, \end{aligned} \tag{3.2.12}$$

$$x_i(t) = \varphi_i(t),\ \sigma - \tau \leq t \leq \sigma, \tag{3.2.13}$$

for $i = 1, \cdots, n$, where $\gamma(t) = \zeta_k$, if $t \in [\theta_k, \theta_{k+1})$, $k \in N$, $t \in R^+$ and $\varphi_i(t)$ is a continuous function.

The initial value problem (3.2.12)-(3.2.13) admits a unique solution $x(t, \sigma, \varphi)$ on interval $[\sigma, \zeta_i]$ under the assumptions $(A1) - (A4)$. The initial moment, σ, is such that $\theta_i \leq \sigma < \zeta_i < \theta_{i+1}$, for some $i \in \mathbb{Z}$ [19].

Definition 3.2.1 *The equilibrium $x = x^*$ of (3.2.8) is globally exponentially stable if there exist positive constants K and α such that*

$$||x(t) - x^*|| \leq K e^{\alpha t} \sup_{-\tau \leq \xi \leq 0} ||x(\xi) - x^*||.$$

We will substitute $x(t) = u(t) + x^*$, then the system (3.2.8) can be simplified as

$$\begin{aligned} u_i'(t) &= -a_i u_i(t) + \sum_{j=1}^{n} b_{ij} G_j(u_j(t)) + \\ &+ \sum_{j=1}^{n} c_{ij} G_j(u_j(\gamma(t))) + \\ &+ \sum_{j=1}^{n} d_{ij} G_j(u_j(t-\tau)), \\ & i = 1, \cdots, n, \end{aligned} \tag{3.2.14}$$

where $G_j(u_j(t)) = g_j(u_j(t) + x_j^*) - g_j(x_j^*)$, with $g_j(0) = 0$.

A trivial verification shows that the stability of the zero solution of (3.2.14) is equal to that of the equilibrium x^* of (3.2.8). So, we take into account the stability of the zero solution of (3.2.14).

Lemma 3.2.1 *[114] Given any real matrices $U_1,\ U_2,\ W$ of appropriate dimensions and a scalar $\epsilon > 0$ such that $0 < W = W^T$, then the following matrix inequality is true:*

$$U_1^T U_2 + U_2^T U_1 \leq \epsilon U_1^T W U_1 + \frac{1}{\epsilon} U_2^T W^{-1} U_2.$$

3.3 Main Result

Theorem 3.3.1 *Let assumptions (A1)-(A4) hold. The equilibrium u^* of (3.2.14) is globally exponentially stable, if there exist matrices $P > 0$, $Q > 0$ and two diagonal matrices $R > 0$, $S > 0$ such that*

$$\begin{pmatrix} \Omega & -PC & -PD \\ -C^T P & S & 0 \\ -D^T P & 0 & Q \end{pmatrix} > 0, \tag{3.3.15}$$

where $\Omega = AP + PA - PBRB^T P - L(R^{-1} + Q + S)L$, $A = diag(a_1, \cdots, a_n)$; $a_i > 0$, $B = (b_{ij})_{n\times n}$, $C = (c_{ij})_{n\times n}$, $D = (d_{ij})_{n\times n}$ are connection weight matrices.

Proof. Firstly we choose a functional candidate for the system (3.2.14) as below

$$\begin{aligned} V(u_t) &= u^T(t)Pu(t) + \int_{t-\tau}^{t} G^T(u(\xi))QG(u(\xi))d\xi \\ &\quad + \int_{\gamma(t)}^{t} G^T(u(\xi))SG(u(\xi))d\xi. \end{aligned}$$

Then we will find the time derivative of $V(u_t)$ along the trajectories of system (3.2.14)

for $t \neq \theta_i$,

$$\begin{aligned}
\dot{V}(u_t) &= \dot{u}^T(t)Pu(t) + u^T(t)P\dot{u}(t) + G^T(u(t))QG(u(t)) - \\
&\quad -G^T(u(t-\tau))QG(u(t-\tau)) + G^T(u(t))SG(u(t)) - \\
&\quad -G^T(u(\gamma(t)))SG(u(\gamma(t))) \\
&= [-Au(t) + BG(u(t)) + CG(u(\gamma(t))) + DG(u(t-\tau))]^T Pu(t) + \\
&\quad +u^T(t)P[-Au(t) + BG(u(t)) + CG(u(\gamma(t))) + DG(u(t-\tau))] + \\
&\quad +G^T(u(t))QG(u(t)) - G^T(u(t-\tau))QG(u(t-\tau)) + \\
&\quad +G^T(u(t))SG(u(t)) - G^T(u(\gamma(t)))SG(u(\gamma(t))) \\
&= -u^T(t)(A^TP + PA)u(t) + G^T(u(t))B^TPu(t) + \\
&\quad +G^T(u(\gamma(t)))C^TPu(t) + G(u(t-\tau))D^TPu(t) + \\
&\quad +u^T(t)PBG(u(t)) + u^T(t)PCG(u(\gamma(t))) + \\
&\quad +u^T(t)PDG(u(t-\tau)) + G^T(u(t))QG(u(t)) - \\
&\quad -G^T(u(t-\tau))QG(u(t-\tau)) + G^T(u(t))SG(u(t)) - \\
&\quad -G^T(u(\gamma(t)))SG(u(\gamma(t))). \qquad (3.3.16)
\end{aligned}$$

It follows from Lemma (3.2.1),

$$\begin{aligned}
u^T(t)PBG(u(t)) + G^T(u(t))B^TPu(t) &\leq u^T(t)PBRB^TPu(t) + \\
&\quad +G^T(u(t))R^{-1}G(u(t)).
\end{aligned} \qquad (3.3.17)$$

Substituting (3.3.17) into (3.3.16), we have

$$\begin{aligned}
\dot{V}(u(t), G(u(\gamma(t))), G(u(t-\tau))) &\leq u^T(t)\Omega u(t) + \\
&\quad +G^T(u(\gamma(t)))C^TPu(t) + u^T(t)PCG(u(\gamma(t))) + \\
&\quad +G^T(u(t-\tau))D^TPu(t) + u^T(t)PDG(u(t-\tau)) + \\
&\quad -G^T(u(\gamma(t)))SG(u(\gamma(t))) \\
&\quad -G^T(u(t-\tau))QG(u(t-\tau)).
\end{aligned}$$

Then we obtain

$$\dot{V}(u_t) \leq -\eta(t)\Sigma\eta^T(t), \qquad (3.3.18)$$

where $\eta(t) = \begin{bmatrix} u^T(t) & G^T(u(\gamma(t))) & G^T(u(t-\tau)) \end{bmatrix}$, and

$$\Sigma = \begin{pmatrix} \Omega & -PC & -PD \\ -C^T P & S & 0 \\ -D^T P & 0 & Q \end{pmatrix}.$$

Now we will prove global exponential stability of the system (3.2.14). Note that $\ell = \max_{1\leq i\leq n}\{L_i\}$ for $i = 1, \cdots, n$ and

$$\begin{aligned} V(u_t) &\leq \lambda_{max}(P)||u(t)||^2 + \\ &\quad +\lambda_{max}(Q)\ell^2 \int_{t-\tau}^{t} ||u(\xi)||^2 d\xi + \\ &\quad +\lambda_{max}(S)\ell^2 \int_{\gamma(t)}^{t} ||u(\xi)||^2 d\xi. \end{aligned} \tag{3.3.19}$$

From (3.3.15) and (3.3.18), one can see that there exists a scalar $m > 0$ such that

$$\begin{pmatrix} \Omega - mI & -PC & -PD \\ -C^T P & S & 0 \\ -D^T P & 0 & Q \end{pmatrix} > 0.$$

Then we can obtain easily the following equation for any scalar $c > 0$,

$$\begin{aligned} \frac{d}{dt}(e^{ct}V(u_t)) &= e^{ct}[c(V(u_t)) + \dot{V}(u_t)] \\ &\leq e^{ct}\Big[(c\lambda_{max}(P) - m)||u(t)||^2 + \\ &\quad +c\lambda_{max}(Q)\ell^2 \int_{t-\tau}^{t} ||u(\xi)||^2 d\xi + \\ &\quad +\lambda_{max}(S)\ell^2 \int_{\gamma(t)}^{t} ||u(\xi)||^2 d\xi\Big]. \end{aligned}$$

$\gamma(t)$ is a function of the alternate constancy. If $\theta_k \leq t < \zeta_k$, then $\gamma(t) > t$. Similarly, if $\zeta_k \leq t < \theta_{k+1}$, then $\gamma(t) < t$. One can obtain $\gamma(t) > t - \tau$, for all $t \in \mathbb{R}$ by applying (A4). Then one can find that

$$\begin{aligned} \frac{d}{dt}(e^{ct}V(u_t)) &\leq e^{ct}\Big[(c\lambda_{max}(P) - m)||u(t)||^2 + \\ &\quad +c\vartheta\ell^2 \int_{t-\tau}^{t} ||u(\xi)||^2 d\xi\Big]. \end{aligned} \tag{3.3.20}$$

where $\vartheta = \lambda_{max}(Q) + \lambda_{max}(S)$. By integrating two sides from 0 to $T > 0$, we obtain

$$\begin{aligned} e^{cT}V(u_T) - V(u_0) &\leq (c\lambda_{max}(P) - m)\int_0^T e^{ct}||u(t)||^2 dt + \\ &\quad + c\vartheta \int_0^T \int_{t-\tau}^t e^{ct}||u(\xi)||^2 d\xi dt. \end{aligned} \tag{3.3.21}$$

One can see easily that

$$\begin{aligned} \int_0^T \int_{t-\tau}^t e^{ct}||u(\xi)||^2 d\xi dt &\leq \tau \int_{-\tau}^T e^{c(t+\tau)}||u(t)||^2 dt \\ &\leq \tau e^{c\tau} \int_{-\tau}^0 ||u(t)||^2 dt + \\ &\quad + \tau e^{c\tau} \int_0^T e^{ct}||u(t)||^2 dt. \end{aligned}$$

Then we obtain

$$\begin{aligned} e^{cT}V(u_T) &\leq (c\lambda_{max}(P) - m + \\ &\quad c\vartheta\ell^2\tau e^{c\tau}) \int_0^T e^{ct}||u(t)||^2 dt + \\ &\quad + c\vartheta\ell^2\tau e^{c\tau} \int_{-\tau}^0 ||u(t)||^2 dt + V(u_0). \end{aligned}$$

By choosing a scalar $c > 0$ such as $m = c\lambda_{max}(P) + c\vartheta\ell^2\tau e^{c\tau}$, we have

$$e^{cT}V(u_T) \leq c\vartheta\ell^2\tau e^{c\tau} \int_{-\tau}^0 ||u(t)||^2 dt + V(u_0). \tag{3.3.22}$$

$V(u_0)$ satisfies the following inequality from the definition of $V(u_t)$

$$V(u_0) \leq \lambda_{max}(P)||u_0||^2 + \vartheta\ell^2 \int_{-\tau}^0 ||u(\xi)||^2 d\xi. \tag{3.3.23}$$

Substituting (3.3.23) into (3.3.22), we have

$$\begin{aligned} e^{cT}V(u_T) &\leq (c\vartheta\ell^2\tau^2 e^{c\tau} + \\ &\quad + \lambda_{max}(P) + \vartheta\ell^2\tau) \sup_{-\tau\leq\xi\leq 0} ||u(\xi)||^2. \end{aligned} \tag{3.3.24}$$

Also we know from (3.3.19), $\lambda_{min}(P)||u(T)||^2 \leq V(u_T)$.

Consequently, we have

$$||u_T)|| \leq \kappa e^{-cT/2} \sup_{-\tau\leq\xi\leq 0} ||u(\xi)||^2.$$

where $\kappa = \sqrt{\dfrac{c\vartheta\ell^2\tau^2 e^{c\tau} + \lambda_{max}(P) + \vartheta\ell^2\tau}{\lambda_{min}(P)}}$.

The theorem is proved.

3.4 Examples and numerical simulations

In this section, we give two examples.

Example 3.4.1 *Consider the following model*

$$\begin{aligned}\frac{dx(t)}{dt} &= -\begin{pmatrix} 0.1 & 0 \\ 0 & 0.1 \end{pmatrix}\begin{pmatrix} x_1(t) \\ x_2(t) \end{pmatrix} \\ &+ \begin{pmatrix} 0.01 & 0.02 \\ 0.03 & 0.01 \end{pmatrix}\begin{pmatrix} tanh(x_1(t)) \\ tanh(x_2(t)) \end{pmatrix} \\ &+ \begin{pmatrix} 0.01 & 0.02 \\ 0.02 & 0.03 \end{pmatrix}\begin{pmatrix} tanh(x_1(\gamma(t))) \\ tanh(x_2(\gamma(t))) \end{pmatrix} \\ &+ \begin{pmatrix} 0.01 & 0.01 \\ 0.01 & 0.01 \end{pmatrix}\begin{pmatrix} tanh(x_1(t-2)) \\ tanh(x_2(t-2)) \end{pmatrix}.\end{aligned} \tag{3.4.25}$$

If $L_1 = 0.1$ and $L_2 = 0.1$, it can be shown easily that (3.4.25) satisfies the conditions for the existence of a unique equilibrium of (3.4.26). For

$$P = \begin{pmatrix} 1.5 & 1 \\ 1 & 1.5 \end{pmatrix},\ Q = \begin{pmatrix} 2 & 0 \\ 0 & 2 \end{pmatrix},$$
$$R = \begin{pmatrix} 3 & 0 \\ 0 & 3 \end{pmatrix},\ S = \begin{pmatrix} 2 & 0 \\ 0 & 2 \end{pmatrix},$$

the condition of the Theorem 1 is satisfied. So, the unique equilibrium $x^* = [0.0064, 0.0084]^T$ of the system (3.4.25) is globally exponentially stable. Also the phase portrait in Fig.3.3 demonstrates the existence of the equilibrium point of the system (3.4.25). In Fig. 3.3, one can see by the simulation that the trajectory with initial point $[2.8, 2]^T$ approaches to the equilibrium $[0.0064, 0.0084]^T$ as time increases.

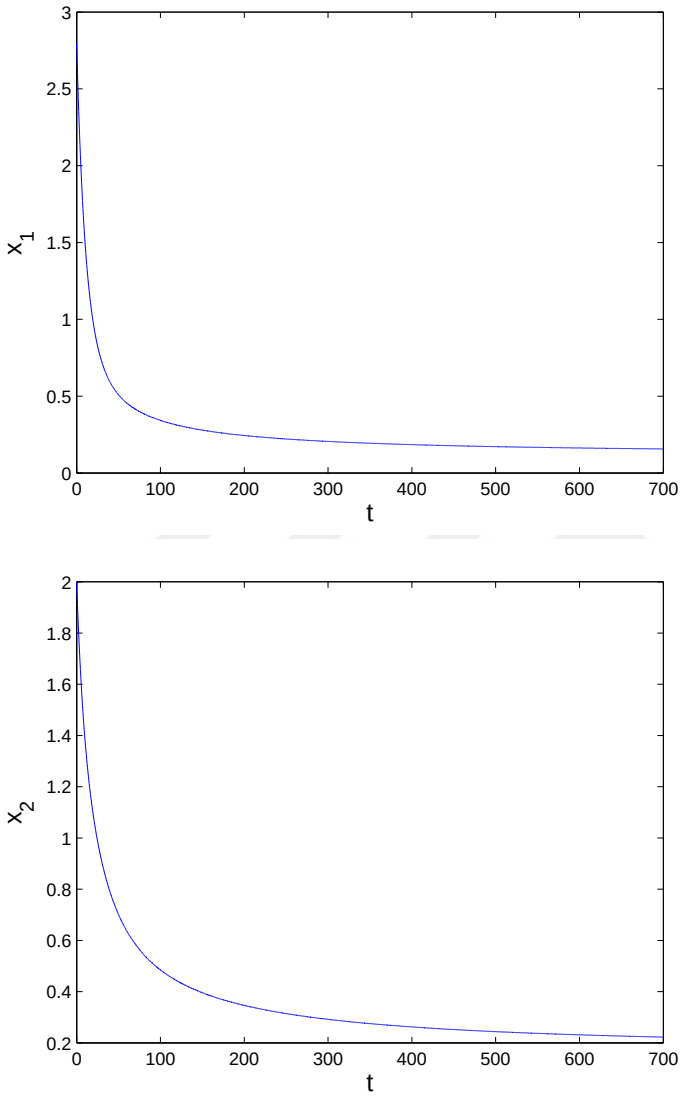

Figure 3.2: Time response of $x_1(t)$ and $x_2(t)$ with piecewise constant argument in Example (3.4.25).

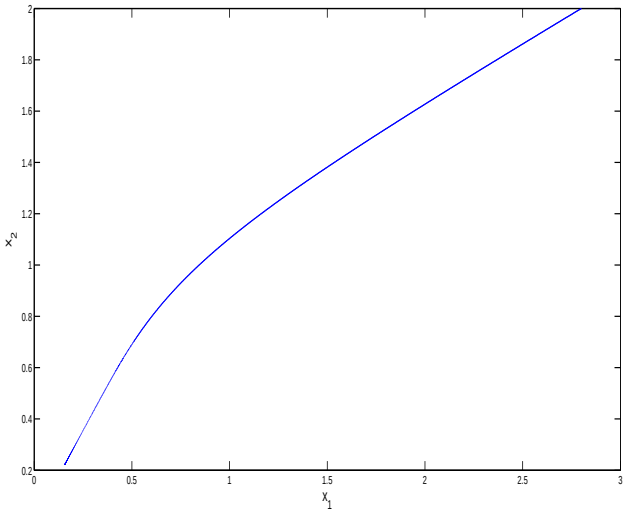

Figure 3.3: The phase portrait of the system in Example (3.4.25).

Example 3.4.2 *Consider the following model*

$$\begin{aligned}\frac{dx(t)}{dt} &= -\begin{pmatrix} 20 & 0 \\ 0 & 15 \end{pmatrix}\begin{pmatrix} x_1(t) \\ x_2(t) \end{pmatrix} \\ &+ \begin{pmatrix} 1 & 2 \\ 3 & 1 \end{pmatrix}\begin{pmatrix} tanh(x_1(t)) \\ tanh(x_2(t)) \end{pmatrix} \\ &+ \begin{pmatrix} 1 & 2 \\ 2 & 3 \end{pmatrix}\begin{pmatrix} tanh(x_1(\gamma(t))) \\ tanh(x_2(\gamma(t))) \end{pmatrix} \\ &+ \begin{pmatrix} 1 & 1 \\ 1 & 1 \end{pmatrix}\begin{pmatrix} tanh(x_1(t-2)) \\ tanh(x_2(t-2)) \end{pmatrix}.\end{aligned} \tag{3.4.26}$$

Here we choose the Lipschitz constants such that $L_1 = 1$ and $L_2 = 1$. The parameters are chosen large to show the influence of the piecewise constant argument. In this example, we want to illustrate the non-smoothness, although the condition of Theorem 1 is not satisfied with these coefficients and Lipschitz constants. The Fig.3.4 makes clear the non-smoothness of the solution with the initial point $[2.8, 2]^T$ at the switching points θ_k; $k \in N$. We conclude that the small parameters prevent to see the non-smoothness, precisely. The solution converges to the unique equilibrium such that $x^* = [0.0115, 0.0239]^T$.

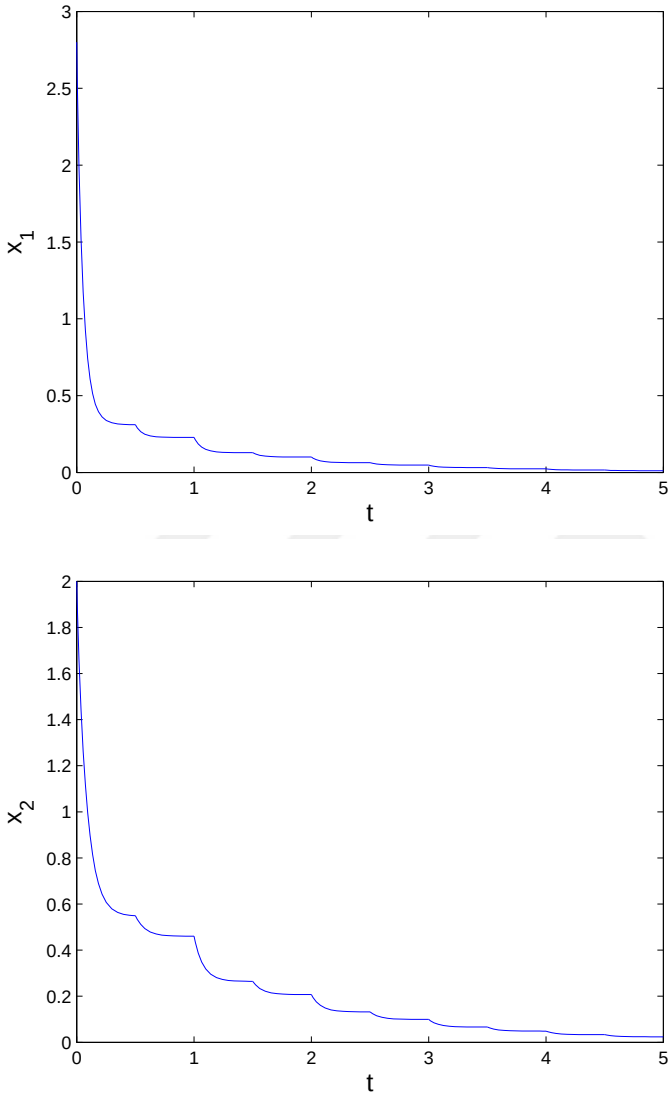

Figure 3.4: Time response of $x_1(t)$ and $x_2(t)$ with piecewise constant argument in Example $(3.4.26)$.

3.5 Conclusion

In this chapter, a new Hopfield neural network with piecewise constant argument of generalized type and constant delay has been studied. Up to now, various kinds of delays were introduced to the Hopfield neural network systems such that constant delays, single time delays, time varying delays and distributed delays. But it is the first time that a Hopfield neural network with both piecewise constant argument of generalized type and constant delay is considered. The crucial point about this chapter is that an LMI method has been extended to a multi-compartmental structure to investigate the stability of the system. In the literature some of the papers consider only delays, some consider only piecewise constant argument. It is important to emphasize this is the first time that both delay and piecewise constant argument involved in the models and this requests the development of LMI method to multi-compartmental case. If one consider equation (3.2.8), it is considered as more general than those discussed by our predecessors. Because if coefficients d_{ij} are equal to zero for all i, j then the system (3.1.7) will be obtained, that is, neural networks with piecewise constant argument. Otherwise if c_{ij} are equal to zero for all i,j, then the differential equation with constant delay will be obtained, considered in the papers [30, 52, 65, 91, 126, 202, 213, 215]. This is why we conclude that the system (3.2.8) is more general then the system (3.1.7) and the systems analyzed previously in the papers [17, 18, 21, 29, 30, 52, 65, 91, 126, 141, 202, 207, 213, 215, 220, 222]. We consider each sum which is located on the right hand side of the main equation as a compartment. The compartments differ from each other since of the different types of arguments. Thus in our study the multi-compartmental activation consists of the three sums. Two examples and their simulations are given to illustrate our results.

CHAPTER 4

CONCLUSIONS

Building a model which represents the complex connections between the neurons may not be possible. But the aim of the all scientists from different disciplines is to establish a structure which can behave as a human brain. This aim clarifies the large amount of the studies on the neural networks. Artificial neural networks have been attracted much attention in the past two decades. Our goal is to develop models of artificial neural network. In this context, the outcomes obtained in the second and third chapter of the present thesis contribute to the development of neural networks theory.

In Chapter 2, we acquired sufficient conditions for the existence and uniqueness of equilibrium and stability of Hopfield neural networks with constant delay and piecewise constant argument. It is the first time that constant delay and piecewise constant argument are combined in a Hopfield neural network. Also the most important novelty of our thesis is using LMIs for investigating the stability. When the existence and uniqueness of the equilibrium is considered, we apply the methods of step. This method provide us to establish a relation between the constant delay and piecewise constant argument. Because the main challenge is to consider all cases between them. Because of the numerous number cells various of connections in the human brain, we have to say about multi-compartmental structure. In our model we consider that complex interconnections may support the multi-compartmental structure in Chapter 3. We added time delay and piecewise constant argument to our model to reflect the possible delay and discontinuity effects during the transferring and processing the information. We study on the stability of Hopfield neural networks with constant de-

lay and piecewise constant argument of generalized type. As far as we know, this is the first time that Hopfield neural networks with a constant delay and piecewise constant argument of generalized type are considered. In the model of neural networks, we may assume that the values of the voltage can not only be evaluated by a neural network continuously but fixed in some discrete moments of time. This may occur in the evolution of the brain during the practical activity. We use Lyapunov function theory to get the stability criteria in terms of LMIs. The LMI method is an efficient and popular method for studying for the stability of neural networks [112, 126, 151, 170, 186, 217]. In [133] and [192], LMI method was considered with several type of constant delays. In this thesis, we consider a different case when activation depends on a constant delay and piecewise constant argument. So we extended the LMI technique and developed the method for a more complex situation. In our LMI, there is a 3×3 matrix and its corresponding vectors including the activation function with present time t, time delay and the piecewise constant argument of generalized type. This multi-compartmental structure in the inequality may facilitate the analysis of the qualitative properties of the more complex neural network systems. So we have further developed the models of our predecessors by using linear matrix inequalities. Our method about exponential stability may be utilized in the chaotic neural networks and control of chaos. Moreover, this method can be applied to the other types of neural networks. This will provide new aspects for the analysis and applications of neural networks. Furthermore, the method improved in this paper may be extended to study more complex systems, such as neural networks with multiple piecewise constant argument and multiple delays, piecewise constant argument and distributed delays, piecewise constant argument and time-varying delays, stochastic neural networks with piecewise constant argument, etc. We can summarize our future plan as below:

- Applying our method to the other common neural networks and their modifications with piecewise constant argument and delay.
- Adding different type of compartments like impulsive, integral-type activations and perturbations.

REFERENCES

[1] O. Abdeljaber, O. Avci, S. Kiranyaz, M. Gabbouj, and D. J. Inman. Real-time vibration-based structural damage detection using one-dimensional convolutional neural networks. *Journal of Sound and Vibration*, 388:154 – 170, 2017.

[2] A. Aftabizadeh and J. Wiener. Oscillatory and periodic solutions of an equation alternately of retarded and advanced types. *Appl. Anal.*, 23:219–231, 1986.

[3] N. Ahad, J. Qadir, and N. Ahsan. Neural networks in wireless networks: Techniques, applications and guidelines. *Journal of Network and Computer Applications*, 68:1 – 27, 2016.

[4] C. Ahn and R. Ramakrishna. QoS provisioning dynamic connection-admission control for multimedia wireless networks using a Hopfield neural network. *IEEE Transactions on Vehicular Technology*, 53(1):106 – 117, 2004.

[5] M. Akhmet. On the reduction principle for differential equations with piecewise constant argument of generalized type. *Journal of Mathematical Analysis and Applications*, 336(1):646 – 663, 2007.

[6] M. Akhmet. Almost periodic solutions of differential equations with piecewise constant argument of generalized type. *Nonlinear Analysis: Hybrid Systems*, 2(2):456 – 467, 2008. Proceedings of the International Conference on Hybrid Systems and Applications, Lafayette, LA, USA, May 2006: Part {II}.

[7] M. Akhmet. Stability of differential equations with piecewise constant arguments of generalized type. *Nonlinear Analysis: Theory, Methods and Applications*, 68(4):794 – 803, 2008.

[8] M. Akhmet. *Principles of Discontinuous Dynamical Systems*. Springer, 2010.

[9] M. Akhmet, D. Aruğaslan, and E. Yılmaz. Method of Lyapunov functions for differential equations with piecewise constant delay. *Journal of Computational and Applied Mathematics*, 235(16):4554 – 4560, 2011.

[10] M. Akhmet and C. Büyükadalı. Differential equations with state-dependent piecewise constant argument. *Nonlinear Analysis: Theory, Methods and Applications*, 72(11):4200 – 4210, 2010.

[11] M. Akhmet and M. O. Fen. Attraction of Li–Yorke chaos by retarded SICNNs. *Neurocomputing*, 147:330 – 342, 2015.

[12] M. Akhmet, M. O. Fen, and M. Kirane. Almost periodic solutions of retarded SICNNs with functional response on piecewise constant argument. *Neural Computing and Applications*, 27(8):2483 – 2495, 2016.

[13] M. Akhmet, M. O. Fen, and A. Kıvılcım. Li-Yorke chaos generation by SICNNs with chaotic/almost periodic postsynaptic currents. *Neurocomputing*, 173(3):580 – 594, 2016.

[14] M. Akhmet, H. Oktem, S. W. Pickl, and G. W. Weber. An anticipatory extension of Malthusian model. *CASYS'05-Seventh International Conference, AIP Conference Proceedings*, 839:260–264, 2006.

[15] M. Akhmet and E. Yılmaz. Impulsive Hopfield-type neural network system with piecewise constant argument. *Nonlinear Analysis: Real World Applications*, 11(4):2584 – 2593, 2010.

[16] M. Akhmet and E. Yılmaz. Global exponential stability of neural networks with non-smooth and impact activations. *Neural Networks*, 34:18 – 27, 2012.

[17] M. U. Akhmet. On the integral manifolds of the differential equations with piecewise constant argument of generalized type. In R. Agarval and K. Perera, editors, *Proceedings of the conference on differential and difference equations at the Florida Institute of Technology*, pages 11–20. Hindawi Publishing Corporation, 2006.

[18] M. U. Akhmet. *Nonlinear Hybrid Continuous/Discrete-Time Models*. Atlantis Press Amsterdam-Paris, 2011.

[19] M. U. Akhmet. Quasilinear retarded differential equations with functional dependence on piecewise constant argument. *Communications on Pure and Applied Analysis*, 13(2):929–947, 2014.

[20] M. U. Akhmet, D. Aruğaslan, and E. Yılmaz. Stability analysis of recurrent neural networks with piecewise constant argument of generalized type. *Neural Networks*, 23:305–311, 2010.

[21] M. U. Akhmet, D. Aruğaslan, and E. Yılmaz. Stability in cellular neural networks with a piecewise constant argument. *Journal of Computational and Applied Mathematics*, 233:2365–2373, 2010.

[22] M. U. Akhmet and M. O. Fen. Shunting inhibitory cellular neural networks with chaotic external inputs. *Chaos: An Interdisciplinary Journal of Nonlinear Science*, 23(2):023112, 2013.

[23] M. U. Akhmet and M. Karacaören. Stability of Hopfield neural networks with delay and piecewise constant argument. *Discontinuity, Nonlinearity, and Complexity*, 3:1–6, 2014.

[24] M. U. Akhmet and M. Karacaören. A Hopfield neural network with multi-compartmental activation. *Neural Computing and Applications*, in press, 2016.

[25] M. U. Akhmet and E. Yılmaz. *Neural Networks with Discontinuous/Impact Activations*. Springer USA, New York, 2014.

[26] M. S. Alwan, L. Xinzhi, and X. Wei-Chau. Comparison principle and stability of differential equations with piecewise constant arguments. *Journal of the Franklin Institute*, 350:211–230, 2013.

[27] S.-I. Amari. Learning patterns and pattern sequences by self-organizing nets of threshold elements. *IEEE Transactions on Computers*, C-21:1197 – 1206, 1972.

[28] V. P. Androvitsaneas, A. K. Alexandridis, I. F. Gonos, G. D. Dounias, and I. A. Stathopulos. Wavelet neural network methodology for ground resistance forecasting. *Electric Power Systems Research*, 140:288 – 295, 2016.

[29] S. Arik. Global asymptotic stability of a larger class of neural networks with constant time delay. *Physics Letters A*, 311:504–511, 2003.

[30] S. Arik. An analysis of exponential stability of delayed neural networks with time varying delays. *Neural Networks*, 17:1027–1031, 2004.

[31] G. Arulampalam and A. Bouzerdoum. Application of shunting inhibitory artificial neural networks to medical diagnosis. In *The Seventh Australian and New Zealand Intelligent Information Systems Conference, 2001*, pages 89–94, 2001.

[32] A. G. Bafghi, R. Safabakhsh, and B. Sadeghiyan. Finding the differential characteristics of block ciphers with neural networks. *Information Sciences*, 178(15):3118 – 3132, 2008. Nature Inspired Problem-Solving.

[33] P. Baldi and A. F. Atiya. How delays affect neural dynamics and learning. *IEEE Transactions on Neural Networks*, 5(4):612–621, 1994.

[34] R. C. Bansal. Overview and literature survey of artificial neural networks applications to power systems. *Journal of the Institution of Engineers (India)*, 86(1):282–296, 2006.

[35] L. J. Banu and P. Balasubramaniam. Robust stability analysis for discrete-time neural networks with time-varying leakage delays and random parameter uncertainties. *Neurocomputing*, 179:126 – 134, 2016.

[36] G. Bao, S. Wen, and Z. Zeng. Robust stability analysis of interval fuzzy Cohen–Grossberg neural networks with piecewise constant argument of generalized type. *Neural Networks*, 33:32 – 41, 2012.

[37] F. Beaufays, Y. Abdel-Magid, and B. Widrow. Application of neural networks to load-frequency control in power systems. *Neural Networks*, 7(1):183–194, 1994.

[38] R. Begg, J. Kamruzzaman, and R. Sarker. *Neural Networks in Healthcare: Potential and Challenges (pp. 1-332*. Hershey, PA: IGI Global, 2006.

[39] R. Bellman and K. L. Cooke. *Differential-difference equations*. Mathematics in science and engineering. Academic press, New York, London, 1963.

[40] R. Bianco, G. Novembre, P. Keller, S.-G. Kim, F. Scharf, A. Friederici, A. Villringer, and D. Sammler. Neural networks for harmonic structure in music perception and action. *NeuroImage*, 142:454 – 464, 2016.

[41] A. Bouzerdoum and R. Pinter. Shunting inhibitory cellular neural networks: derivation and stability analysis. *IEEE Transactions on Circuits and Systems I: Fundamental Theory and Applications*, 40(3):215 – 221, 1993.

[42] S. Boyd, L. El Ghaoui, E. Feron, and V. Balakrishnan. *Linear Matrix Inequalities in System and Control Theory*. SIAM, Philadelphia, 1994.

[43] S. Busenberg and K. L. Cooke. Models of vertically transmitted diseases with sequential-continuous dynamics. *Nonlinear phenomena in mathematical sciences*, pages 179–187, 1982.

[44] A. Calise and R. Rysdyk. Nonlinear adaptive flight control using neural networks. *IEEE Control Systems*, 18(6):14–25, 1998.

[45] S. A. Campbell and R. Jessop. Approximating the stability region for a differential equation with a distributed delay. *Mathematical Modelling of Natural Phenomena*, 4(2):1–27, 001 2009.

[46] J. Cao. Estimation of the domain of attraction and the convergence rate of a Hopfield associative memory and an application. *Journal of Computer and System Sciences*, 60:179–186, 2000.

[47] J. Cao. Periodic oscillation and exponential stability of delayed CNNs. *Physics Letters A*, 270(3–4):157 – 163, 2000.

[48] J. Cao. Global exponential stability of Hopfield neural networks. *International Journal of Systems Science*, 32:233–236, 2001.

[49] J. Cao. An estimation of the domain of attraction and convergence rate for Hopfield continuous feedback neural networks. *Physics Letters A*, 325:370–374, 2004.

[50] J. Cao and T. Chen. Globally exponentially robust stability and periodicity of delayed neural networks. *Chaos, Solitons and Fractals*, 22(4):957 – 963, 2004.

[51] J. Cao, H. Li, and L. Han. Novel results concerning global robust stability of delayed neural networks. *Nonlinear Analysis: Real World Applications*, 7(3):458 – 469, 2006.

[52] J. Cao and X. Li. Stability in delayed Cohen-Grossberg neural networks: LMI optimization approach. *Physica D*, 212(1-2):54–65, 2005.

[53] J. Cao, J. Liang, and J. Lam. Exponential stability of high-order bidirectional associative memory neural networks with time delays. *Physica D*, 199:425–436, 2004.

[54] J. Cao and Q. Song. Stability in Cohen-Grossberg type BAM neural networks with time-varying delays. *Nonlinearity*, 19(7):1601–1617, 2006.

[55] J. Cao and J. Wang. Global asymptotic and robust stability of recurrent neural networks with time delays. *IEEE Transactions Circuits and System I*, 52(2):417–426, 2005.

[56] J. Cao and J. Wang. Global exponential stability and periodicity of recurrent neural networks with time delay. *IEEE Transactions Circuits and System I*, 52:920–931, 2005.

[57] T. Chen and L. Rong. Delay-independent stability analysis of Cohen–Grossberg neural networks. *Physics Letters A*, 317(5–6):436 – 449, 2003.

[58] W. H. Chen, X. Lu, Z. H. Guan, and W. X. Zheng. Delay-dependent exponential stability of neural networks with variable delay: An LMI approach. *IEEE Transactions on Circuits and Systems II: Express Briefs*, 53(9):837 – 842, 2006.

[59] Y. Chen, J. Yang, and J. Qian. Recurrent neural network for facial landmark detection. *Neurocomputing*, 219:26 – 38, 2017.

[60] K.-S. Chiu, M. Pinto, and J.-C. Jeng. Existence and global convergence of periodic solutions in recurrent neural network models with a general piecewise alternately advanced and retarded argument. *Acta Applicandae Mathematicae*, 133(1):133–152, 2014.

[61] L. O. Chua and T. Roska. *Cellular neural networks with nonlinear and delay type template elements*. In Proc 1990 IEEE int workshop on cellular neural networks and their applications pp 12-25, 1990.

[62] L. O. Chua and T. Roska. Cellular neural networks with nonlinear and delay type template elements and non-uniform grids. *International Journal of Circuit Theory and Applications*, 20:449–451, 1992.

[63] L. O. Chua and L. Yang. Cellular neural networks: applications. *IEEE Transactions on Circuits and Systems*, 35:1273–1290, 1988.

[64] L. O. Chua and L. Yang. Cellular neural networks: theory. *IEEE Transactions on Circuits and Systems*, 35:1257–1272, 1988.

[65] P. P. Civalleri, M. Gilli, and L. Pandolfi. On the stability of cellular neural networks with delay. *IEEE Transactions Circuits and Systems I*, 40:157–165, 1993.

[66] M. A. Cohen and S. Grossberg. Absolute stability of global pattern formation and parallel memory storage by competitive neural networks. *IEEE Transactions on Systems, Man, and Cybernetics*, SMC-13:815 – 826, 1983.

[67] J. Connor, R. Martin, and L. Atlas. Recurrent neural networks and robust time series prediction. *IEEE Transactions on Neural Networks*, 5:240 – 254, 1994.

[68] K. L. Cooke and Z. Grossman. Discrete delay, distributed delay and stability switches. *Journal of Mathematical Analysis and Applications*, 86(2):592 – 627, 1982.

[69] K. L. Cooke and J. Wiener. Retarded differential equations with piecewise constant delays. *Journal of Mathematical Analysis and Applications*, 99(1):265 – 297, 1984.

[70] K. L. Cooke and J. Wiener. Stability regions for linear equations with piecewise continuous delay. *Computers and Mathematics with Applications*, 12(6):695 – 701, 1986.

[71] A. Coolen, R. Kühn, and P. Sollich. *Theory of Neural Information Processing Systems*. Oxford University Press, 2005.

[72] S. Coombes and C. Laing. Delays in activity-based neural networks. *Philosophical Transactions of the Royal Society of London A: Mathematical, Physical and Engineering Sciences*, 367(1891):1117–1129, 2009.

[73] C. Corduneanu. *Principles of Differential and Integral Equations*. Chelsea Publishing Company, The Bronx, New York, 1977.

[74] C. Corduneanu. *Integral Equations and Applications*. Cambridge University Press, New York, 2008.

[75] L. Dai. *Nonlinear Dynamics of Piecewise Constant Systems and Implementation of Piecewise Constant Arguments*. World Scientific, 2008.

[76] L. Dai and M. Singh. A new approach with piecewise-constant arguments to approximate and numerical solutions of oscillatory problems. *Journal of Sound and Vibration*, 263(3):535 – 548, 2003.

[77] D. Deligiorgi and K. Philippopoulos. *Spatial Interpolation Methodologies in Urban Air Pollution Modeling: Application for the Greater Area of Metropolitan Athens, Greece, Advanced Air Pollution.* InTech, 2011.

[78] D. B. DeYoung. Thinking about the brain. *Acts and Facts*, 19(2), 1990.

[79] O. Diekmann. *Delay Equations*. Applied mathematical sciences Volume 110. Springer-Verlag, New York, 1995.

[80] R. D. Driver. *Ordinary and Delay Differential Equations*. Springer-Verlag, New York, 1932.

[81] R. D. Driver. Can the future influence the present? *Physical Review D*, 19:1098–1107, 1979.

[82] C. Drouillet, J. Karandikar, C. Nath, A.-C. Journeaux, M. E. Mansori, and T. Kurfess. Tool life predictions in milling using spindle power with the neural network technique. *Journal of Manufacturing Processes*, 22:161 – 168, 2016.

[83] G.-R. Duan. *LMIs in Control Systems: Analysis, Design and Applications*. CRC Press, 2013.

[84] L. El'sgol'ts and S. Norkin. *Introduction to the Theory and Application of Differential Equations with Deviating Arguments*. Mathematics in Science and Engineering. Elsevier Science, 1973.

[85] M. O. Fen and M. Akhmet. Impulsive SICNNs with chaotic postsynaptic currents. *Discrete and Continuous Dynamical Systems - Series B*, 21(4):1119–1148, 2016.

[86] E. Fiesler and R. Beale, editors. *Handbook of Neural Computation*. Oxford University Press, 1997.

[87] D.-L. Flores, C. Gómez, D. Cervantes, A. Abaroa, C. Castro, and R. A. Castañeda-Martínez. Predicting the physiological response of tivela stultorum hearts with digoxin from cardiac parameters using artificial neural networks. *Biosystems*, 151:1 – 7, 2017.

[88] M. Forti and A. Tesi. New conditions for global stability of neural networks with application to linear and quadratic programming problems. *IEEE Transactions on Circuits and Systems I*, 42:354–366, 1995.

[89] E. García-Garaluz, M. Atencia, G. Joya, F. García-Lagos, and F. Sandoval. Hopfield networks for identification of delay differential equations with an application to dengue fever epidemics in cuba. *Neurocomputing*, 74(16):2691 – 2697, 2011. Advances in Extreme Learning Machine: Theory and ApplicationsBiological Inspired Systems. Computational and Ambient IntelligenceSelected papers of the 10th International Work-Conference on Artificial Neural Networks (IWANN2009).

[90] K. Gopalsamy. *Stability and Oscillations in Delay Differential Equations of Population Dynamics*. Mathematics and Its Applications. Springer Netherlands, 1992.

[91] K. Gopalsamy and X. He. Delayed-independent stability in bidirectional associative memory networks. *IEEE Trans Neural Networks*, 5:998–1002, 1994.

[92] K. Gopalsamy and X. He. Stability in asymmetric Hopfield nets with delays transmission delays. *Physica D*, 76:344–358, 1994.

[93] D. Graupe. *Principles of Artificial Neural Networks*. Advanced Series on Circuits and Systems-Vol.3. World Scientific, Singapore, 2008.

[94] S. Guo and L. Huang. Periodic oscillation for a class of neural networks with variable coefficients. *Nonlinear Analysis: Real World Applications*, 6:545–561, 2005.

[95] I. Győri and G. Ladas. *Oscillation theory of delay differential equations: with applications*. Oxford mathematical monographs. Oxford University Press, 1991.

[96] J. K. Hale. *Theory of Functional Differential Equations*. Applied mathematical sciences. Springer-Verlag, New York, 1977.

[97] P. Hartman. *Ordinary Differential Equations*. Society for Industrial and Applied Mathematics, Philadelphia, PA, USA, 2nd edition, 2002.

[98] M. Havaei, A. Davy, D. Warde-Farley, A. Biard, A. Courville, Y. Bengio, C. Pal, P.-M. Jodoin, and H. Larochelle. Brain tumor segmentation with deep neural networks. *Medical Image Analysis*, 35:18 – 31, 2017.

[99] S. Haykin. *Neural Networks: A Comprehensive Foundation*. International edition. Prentice Hall, 1999.

[100] J. D. Head and K. Y. Lee. Using artificial neural networks to implement real-time optimized multi-objective power plant control in a multi-agent system. *IFAC Proceedings Volumes*, 45(21):126 – 131, 2012. 8th Power Plant and Power System Control Symposium.

[101] D. O. Hebb. *The organization of behavior: A neuropsychological theory*. Psychology Press, 2005.

[102] L. Hongjiu, C. Huimin, and H. Yanrong. Financial characteristics and prediction on targets of m&a based on SOM-Hopfield neural network. *Industrial Engineering and Engineering Management, 2007 IEEE International Conference on*, 2007.

[103] J. J. Hopfield. Neurons with graded response have collective computational properties like those of two-stage neurons. *Proceedings of the National Academy of Sciences of the United States of America 81*, pages 3088–3092, 1984.

[104] J. J. Hopfield. Neurons, dynamics and computation. *Physics Today*, 47:40–46, 1994.

[105] J. J. Hopfield and D. Tank. Simple neural optimization networks: an a/d converter signal decision circuit and a linear programming circuit. *IEEE Transactions on Circuits and Systems*, 33:533–541, 1986.

[106] J. J. Hopfield and D. W. Tank. "Neural" computation of decisions in optimization problems. *Biological Cybernetics*, 52(3):141–152, 1985.

[107] F. Hoppensteadt. *An Introduction to the Mathematics of Neurons: Modeling in the Frequency Domain*. Cambridge Studies in Mathematical Biology. Cambridge University Press, 1997.

[108] R. Horn and C. Johnson. *Matrix Analysis*. Cambridge University Press, 2012.

[109] L. Hu, F. Sun, H. Xu, H. Liu, and X. Zhang. Mutation Hopfield neural network and its applications. *Information Sciences*, 181(1):92 – 105, 2011.

[110] C. Hua, S. Wu, and X. Guan. New robust stability condition for discrete-time recurrent neural networks with time-varying delays and nonlinear perturbations. *Neurocomputing*, 219:203 – 209, 2017.

[111] H. Huang, J. Cao, and J. Wang. Global exponential stability and periodic solutions of recurrent neural networks with delays. *Physics Letters A*, 298(5–6):393 – 404, 2002.

[112] X. Huang, J. Cao, and D. Huang. LMI-based approach for delay-dependent exponential stability analysis of BAM neural networks. *Chaos, Solitons and Fractals*, 24:885–898, 2005.

[113] G. Hutchinson. Circular causal systems in ecology. *Ann. N.Y. Acad. Sci.*, 50:221–246, 1948.

[114] K. Jayasree and S. Deo. On piecewise constant delay differential equations. *Journal of Mathematical Analysis and Applications*, 169(1):55 – 69, 1992.

[115] D. S. Jeng, D. Cha, and M. Blumenstein. Application of neural network in civil engineering problems. In *Proceedings of the International Conference on Advances in the Internet, Processing, Systems and Interdisciplinary Research (IPSI-2003)*. Citeseer, 2003.

[116] K. Jules and P. P. Lin. NASA/TM-2002-211811 artificial neural networks applications: From aircraft design optimization to orbiting spacecraft on–board environment monitoring, 2002.

[117] K. Kapanova, I. Dimov, and J. Sellier. A neural network sensitivity analysis in the presence of random fluctuations. *Neurocomputing*, 224:177 – 183, 2017.

[118] N. Karmarkar. A new polynomial-time algorithm for linear programming. *Combinatorica*, 4:373–395, 1984.

[119] B. Kosko. Bidirectional associative memories. *IEEE Trans. Syst. Man Cybern.*, 18(1):49–60, Jan. 1988.

[120] S. Kostić, M. Stojković, and S. Prohaska. Hydrological flow rate estimation using artificial neural networks: Model development and potential applications. *Applied Mathematics and Computation*, 291:373 – 385, 2016.

[121] Y. Kuang. *Delay Differential Equations with Applications in Population Dynamics*. Academic Press, Inc, San Diego, 1993.

[122] L. Kumar and S. K. Rath. Hybrid functional link artificial neural network approach for predicting maintainability of object-oriented software. *Journal of Systems and Software*, 121:170 – 190, 2016.

[123] J. LaSalle. *The Stability and Control of Discrete Processes*. Applied Mathematical Sciences. Springer, 1986.

[124] T.-Y. Li and J. A. Yorke. Period three implies chaos. *The American Mathematical Monthly*, 82(10):985–992, 1975.

[125] X. Li and Z. Chen. Stability properties for Hopfield neural networks with delays and impulsive perturbations. *Nonlinear Analysis: Real World Applications*, 10:3253–3265, 2009.

[126] X. Liao, G. R. Chen, and E. N. Sanchenz. Delay dependent exponential stability analysis of delayed neural networks: An LMI approach. *Neural Networks*, 15:855–866, 2002.

[127] C.-L. Lin, C.-C. Lai, and T.-H. Huang. A neural network for linear matrix inequality problems. *IEEE Transactions on Neural Networks*, 11:1078–1092, 2002.

[128] W.-J. Lin, Y. He, C.-K. Zhang, M. Wu, and M.-D. Ji. Stability analysis of recurrent neural networks with interval time-varying delay via free-matrix-based integral inequality. *Neurocomputing*, 205:490 – 497, 2016.

[129] B. Liu. Almost periodic solutions for Hopfield neural networks with continuously distributed delays. *Mathematics and Computers in Simulation*, 73:327–335, 2007.

[130] D. Liu, S. Zhu, and W. Chang. Input-to-state stability of memristor-based complex-valued neural networks with time delays. *Neurocomputing*, 221:159 – 167, 2017.

[131] P. Liu and K. Gopalsamy. Global stability and chaos in a population model with piecewise constant arguments. *Appl. Math. Comput.*, 101(1):63–88, June 1999.

[132] P. Liu, Z. Zeng, and J. Wang. Complete stability of delayed recurrent neural networks with gaussian activation functions. *Neural Networks*, 85:21 – 32, 2017.

[133] X. Liu and N. Jiang. Robust stability analysis of generalized neural networks with multiple discrete delays and multiple distributed delays. *Neurocomputing*, 72:1789–1796, 2009.

[134] Y. Liu, Z. You, and L. Cao. On the almost periodic solution of generalized Hopfield neural networks with time-varying delays. *Neurocomputing*, 69:1760–1767, 2006.

[135] X. Lou and B. Cui. New LMI conditions for delay-dependent asymptotic stability of delayed Hopfield neural networks. *Neurocomputing*, 69(16–18):2374 – 2378, 2006.

[136] X. Y. Lou and B. T. Cui. Global asymptotic stability of delay BAM neural networks with impulses. *Chaos Solitons and Fractals*, 29:1023–1031, 2006.

[137] X.-Y. Lou and B.-T. Cui. Novel global stability criteria for high-order Hopfield-type neural networks with time-varying delays. *Journal of Mathematical Analysis and Applications*, 330(1):144 – 158, 2007.

[138] A. I. Lur'e. *Some Nonlinear Problems in the Theory of Automatic Control*. H. M. Stationery Off., London, 1957. In Russian 1951.

[139] A. I. Lur'e and V. N. Postnikov. On the theory of stability of control systems. *Applied mathematics and mechanics*, 8(3):1099–1106, 1944.

[140] A. M. Lyapunov. Problème général de la stabilité du mouvement. *Annals of Mathematics Studies*, 17, 1947.

[141] C. M. Marcus and R. M. Westervelt. Stability of analog neural networks with delay. *Physical Review A*, 39:347, 1989.

[142] W. Mcculloch and W. Pitts. A logical calculus of ideas immanent in nervous activity. *Bulletin of Mathematical Biophysics*, 5:127–147, 1943.

[143] T. Mikołajczyk, K. Nowicki, A. Kłodowski, and D. Pimenov. Neural network approach for automatic image analysis of cutting edge wear. *Mechanical Systems and Signal Processing*, 88:100 – 110, 2017.

[144] S. Mohamad and K. Gopalsamy. Exponential stability of continuous-time and discrete-time cellular neural networks with delays. *Applied Mathematics and Computation*, 135:17–38, 2003.

[145] S. Mohamad, K. Gopalsamy, and H. Akça. Exponential stability of artificial neural networks with distributed delays and large impulses. *Nonlinear Analysis: Real World Applications*, 9:872–888, 2008.

[146] M. Mouhoub. A Hopfield-type neural network based model for temporal constraints. *International Journal on Artificial Intelligence Tools*, 13(3):533 – 545, 2004.

[147] A. D. Myshkis. *Linear differential equations with retarded arguments*. Nauka, Moscow, in Russian, 1972.

[148] A. D. Myshkis. On certain problems in the theory of differential equations with deviating argument. *Russian Mathematical Surveys*, 32(2):181, 1977.

[149] M. Neshat and A. E. Zadeh. Hopfield neural network and fuzzy Hopfield neural network for diagnosis of liver disorders. In *2010 5th IEEE International Conference Intelligent Systems*, pages 162–167, July 2010.

[150] A. Ng and K. H. Jin. Stable adaptive control with online learning. In *Proceedings of NIPS*, volume 17, 2005.

[151] X. Nie and J. Cao. Stability analysis for the generalized Cohen-Grossberg neural networks with inverse lipschitz neuron activations. *Computers and Mathematics with Applications*, 57:1522–1536, 2009.

[152] G. O., R. N., and F. D. Intelligent systems in the automotive industry: Applications and trends. *Knowl. Inf. Syst.*, 12(2):147–168, July 2007.

[153] J. J. Oliveira. Global asymptotic stability for neural network models with distributed delays. *Mathematical and Computer Modelling*, 50(1/2):81 – 91, 2009.

[154] G. Papaschinopoulos, G. Stefanidou, and P. Efraimidis. Existence, uniqueness and asymptotic behavior of the solutions of a fuzzy differential equation with piecewise constant argument. *Information Sciences*, 177(18):3855–3870, 2007.

[155] W. Peng, Q. Wu, and Z. Zhang. LMI-based global exponential stability of equilibrium point for neutral delayed BAM neural networks with delays in leakage terms via new inequality technique. *Neurocomputing*, 199:103 – 113, 2016.

[156] K. Pentoś and K. Pieczarka. Applying an artificial neural network approach to the analysis of tractive properties in changing soil conditions. *Soil and Tillage Research*, 165:113 – 120, 2017.

[157] M. Pinto. Asymptotic equivalence of nonlinear and quasi linear differential equations with piecewise constant arguments. *Mathematical and Computer Modelling*, 49:1750–1758, 2009.

[158] V. M. Popov. Absolute stability of nonlinear systems of automatic control. *Automation and Remote Control*, 22:857–875, 1962.

[159] V. M. Popov. One problem in the theory of absolute stability of controlled systems. *Automation and Remote Control*, 25:1129–1134, 1964.

[160] V. M. Popov. *Hyperstability of Control Systems*. Applied mathematical sciences. Springer-Verlag, New York, 1973.

[161] A. Prieto, B. Prieto, E. M. Ortigosa, E. Ros, F. Pelayo, J. Ortega, and I. Rojas. Neural networks: An overview of early research, current frameworks and new challenges. *Neurocomputing*, 214:242 – 268, 2016.

[162] D. V. Prokhorov. Toyota prius HEV neurocontrol and diagnostics. *Neural Networks*, 21(2–3):458 – 465, 2008.

[163] J. Qiu. Dynamics of high-order Hopfield neural networks with time delays. *Neurocomputing*, 73(4–6):820–826, 2010.

[164] J. Rabuñal. *Artificial Neural Networks in Real-Life Applications*. Idea Group Pub., 2005.

[165] N. Raj and G. S. K. Intelligent air traffic control using neural networks. *International Journal of Science Technology and Engineering*, 2(8), 2016.

[166] F. Ren and J. Cao. LMI-based criteria for stability of high-order neural networks with time-varying delay. *Nonlinear Analysis: Real World Applications*, 7(5):967 – 979, 2006.

[167] L. Rong. LMI-based criteria for robust stability of Cohen-Grossberg neural networks with delay. *Physics Letters A*, 339(1/2):63 – 73, 2005.

[168] F. Rosenblatt. The perceptron: A probabilistic model for information storage and organization in the brain. *Psychological Review*, pages 65–386, 1958.

[169] S. Ruan and R. Filfil. Dynamics of a two-neuron system with discrete and distributed delays. *Physica D: Nonlinear Phenomena*, 191(3-4):323–342, 5 2004.

[170] E. N. Sanchez and J. P. Perez. Input-to-state stability (iss) analysis for dynamic neural networks. *IEEE Transactions Circuits and System I*, 46:1395–1398, 1999.

[171] S. M. Shah and J. Wiener. Advanced differential equations with piecewise constant argument deviations. *International Journal of Mathematics and Mathematical Sciences*, 6(4):671–703, 1983.

[172] G. M. Shepherd. *The Synaptic Organization of the Brain Fifth Edition*. Oxford University Press, 2004.

[173] V. Singh. New LMI-based criteria for global robust stability of delayed neural networks. *Applied Mathematical Modelling*, 34(10):2958 – 2965, 2010.

[174] H. Smith. *An Introduction to Delay Differential Equations with Applications to the Life Sciences*, volume 57. Texts in Applied Mathematics, Springer, 2011.

[175] P. Smolensky, D. D. E. Rumelhart, and M. L. C. Mozer. *Mathematical Perspectives on Neural Networks*. L. Erlbaum Associates Inc., Hillsdale, NJ, USA, 1996.

[176] Q. Song and J. Cao. Stability analysis of Cohen-Grossberg neural network with both time-varying and continuously distributed delays. *Journal of Computational and Applied Mathematics*, 197:188–203, 2006.

[177] Q. Song, H. Yan, Z. Zhao, and Y. Liu. Global exponential stability of complex-valued neural networks with both time-varying delays and impulsive effects. *Neural Networks*, 79:108 – 116, 2016.

[178] O. Sporns. *Networks of the Brain*. The MIT Press, 2010.

[179] L. W. Swanson. *Brain Architecture: Understanding the Basic Plan*. Oxford University Press, 2003.

[180] Y. Tan and M. Saif. Neural-networks-based nonlinear dynamic modeling for automotive engines. *Neurocomputing*, 30(1–4):129 – 142, 2000.

[181] D. Tank and J. Hopfield. Neural computation by concentrating in information in time. *Proc. Natl. Acad. Sci. USA*, 84:1896–1991, 1987.

[182] J. Taylor. *Mathematical Approaches to Neural Networks*. North-Holland Mathematical Library. Elsevier Science, 1993.

[183] R. F. Thompson. *The Brain: An Introduction to Neuroscience*. W.H. Freeman and Company, New York, 1985.

[184] F. F. Verhulst. Notice sur la loi que la population suit dans son acroissement. *Correspondance mathématique et physique*, 10:113–121, 1838.

[185] F. Wang and M. Liu. Global exponential stability of high-order bidirectional associative memory (BAM) neural networks with time delays in leakage terms. *Neurocomputing*, 177:515 – 528, 2016.

[186] H. Wang, Q. Song, and C. Duana. LMI criteria on exponential stability of BAM neural networks with both time-varying delays and general activation functions. *Mathematics and Computers in Simulation*, 81:837–850, 2010.

[187] H. Wang, Y. Wu, B. Zhang, and K. L. Du. Recurrent neural networks: Associative memory and optimization. *Journal of Information Technology and Software Engineering*, 1(2), 2011.

[188] L. Wang and X. Zou. Harmless delays in Cohen–Grossberg neural networks. *Physica D: Nonlinear Phenomena*, 170(2):162 – 173, 2002.

[189] Q. Wang. The numerical asymptotically stability of a linear differential equation with piecewise constant arguments of mixed type. *Acta Applicandae Mathematicae*, 146(1):145–161, 2016.

[190] Y. Wang, Q. Kang, C. Zhang, and H. Ye. A high-resolution transmission electron microscopy study of long-period grain-boundary structure in-ti. *Philosophical Magazine Letters*, 75(2):91–96, 1997.

[191] Y. Wang and J. Yan. Oscillation of a differential equation with fractional delay and piecewise constant arguments. *Computers and Mathematics with Applications*, 52(6):1099–1106, 2006.

[192] Z. Wang, H. Shu, Y. Liu, D. W. Ho, and X. Liu. Robust stability analysis of generalized neural networks with discrete and distributed time delays. *Chaos, Solitons and Fractals*, 30(4):886 – 896, 2006.

[193] C. Wen, A. Rebelo, J. Zhang, and J. Cardoso. A new optical music recognition system based on combined neural network. *Pattern Recognition Letters*, 58:1 – 7, 2015.

[194] U.-P. Wen, K.-M. Lan, and H.-S. Shih. A review of Hopfield neural networks for solving mathematical programming problems. *European Journal of Operational Research*, 198(3):675 – 687, 2009.

[195] J. Wiener. *Generalized Solutions of Functional Differential Equations*. World Scientific Singapore, 1993.

[196] J. Wiener and K. L. Cooke. Oscillations in systems of differential equations with piecewise constant argument. *Journal of Mathematical Analysis and Applications*, 137(1):221 – 239, 1989.

[197] B. K. Wong and Y. Selvi. Neural network applications in finance: A review and analysis of literature (1990–1996). *Information and Management*, 34(3):129 – 139, 1998.

[198] F. Wong. Time series forecasting using backpropagation neural networks. *Neurocomputing*, 2(4):147 – 159, 1991.

[199] A. Wu, L. Liu, T. Huang, and Z. Zeng. Mittag-Leffler stability of fractional-order neural networks in the presence of generalized piecewise constant arguments. *Neural Networks*, 85:118 – 127, 2017.

[200] J. Wu, C. Zhang, and Z. Chen. An online method for lithium-ion battery remaining useful life estimation using importance sampling and neural networks. *Applied Energy*, 173:134 – 140, 2016.

[201] D. Xie and Y. Jiang. Global exponential stability of periodic solution for delayed complex-valued neural networks with impulses. *Neurocomputing*, 207:528 – 538, 2016.

[202] S. Xu and J. Lam. A new approach to exponential stability of neural networks with time-varying delays. *Neural networks*, 19:76–83, 2006.

[203] V. A. Yakubovich. The solution of certain matrix inequalities in automatic control theory. *Soviet Math. Dokl.*, 3:620–623, 1962. In Russian, 1961.

[204] V. A. Yakubovich. Solution of certain matrix inequalities encountered in nonlinear control theory. *Soviet Math. Dokl.*, 5:652–656, 1964.

[205] V. A. Yakubovich. The method of matrix inequalities in the stability theory of nonlinear control systems, i, ii, iii. *Automation and Remote Control*, 25-26:905–917, 577–592, 753–763, 1967.

[206] V. A. Yakubovich. On synthesis of optimal controls in a linear differential game with quadratic payoff. *Soviet Math. Dokl.*, 11:1478–1481, 1970.

[207] X. Yang. Existence and exponential stability of almost periodic solutions for cellular neural networks with piecewise constant argument. *Acta Mathematicae Applicate Sinica*, 29:789–800, 2006.

[208] H. Ye, A. N. Michel, and K. N. Wang. Global stability and local stability of Hopfield neural networks with delays. *Physical Review E*, 50:4206 – 4213, 1994.

[209] H. Ye, A. N. Michel, and K. N. Wang. Qualitative analysis of Cohen-Grossberg neural networks with multiple delays. *Physical Review E*, 51:2611–2618, 1995.

[210] T. Yu, D. Cao, S. Liu, and H. Chen. Stability analysis of neural networks with periodic coefficients and piecewise constant arguments. *Journal of the Franklin Institute*, 353(2):409 – 425, 2016.

[211] R. Yuan. The existence of almost periodic solutions of retarded differential equations with piecewise constant argument. *Nonlinear Analysis: Theory, Methods and Applications*, 48(7):1013 – 1032, 2002.

[212] C.-K. Zhang, Y. He, L. Jiang, W.-J. Lin, and M. Wu. Delay-dependent stability analysis of neural networks with time-varying delay: A generalized free-weighting-matrix approach. *Applied Mathematics and Computation*, 294:102 – 120, 2017.

[213] J. Zhang and X. Jin. Global stability analysis in delayed Hopfield neural network models. *Neural Networks*, 13:745–753, 2000.

[214] L. Zhang, Q. Song, and Z. Zhao. Stability analysis of fractional-order complex-valued neural networks with both leakage and discrete delays. *Applied Mathematics and Computation*, 298:296 – 309, 2017.

[215] Q. Zhang, X. Wei, and J. Xu. Global asymptotic stability of Hopfield neural networks with transmission delays. *Physics Letters A*, 318:399–405, 2003.

[216] Q. Zhang, X. Wei, and J. Xu. Delay-dependent global stability condition for delayed Hopfield neural networks. *Nonlinear Analysis: Real World Applications*, 8:997 – 1002, 2007.

[217] Z. Zhang, J. Cao, and D. Zhou. Novel LMI-based condition on global asymptotic stability for a class of Cohen-Grossberg BAM networks with extended activation functions. *IEEE Trans*, 25(6):1161–1172, 2014.

[218] Z. Zhang and K. Liu. Existence and global exponential stability of a periodic solution to interval general bidirectional associative memory (BAM) neural networks with multiple delays on time scales. *Neural Networks*, 24:427–439, 2011.

[219] Z. Zhang, W. Liu, and D. Zhou. Global asymptotic stability to a generalized Cohen-Grossberg BAM neural networks of neutral type delays. *Neural Networks*, 25:94–105, 2012.

[220] D. Zhou and J. Cao. Globally exponential stability conditions for cellular neural networks with time-varying delays. *Applied Mathematics and Computation*, 13:487–496, 2002.

[221] X. Zhou, W. Zhou, A. Dai, J. Yang, and L. Xie. Asymptotical stability of stochastic neural networks with multiple time-varying delays. *International Journal of Control*, 88(3):613 – 621, 2015.

[222] H. Zhu and L. Huang. Dynamics of a class of nonlinear discrete-time neural networks. *Computers and Mathematics with Applications*, 48:85–94, 2004.

CURRICULUM VITAE

PERSONAL INFORMATION

Surname, Name: Karacaoren, Meltem
Nationality: Turkish (TC)
Date and Place of Birth: 30.10.1986, Ankara
Marital Status: Married
E-mail:meltem.alisen@metu.edu.tr

EDUCATION

Degree	Institution	Year of Graduation
M.S.	TOBB ETU	2010
B.S.	Ankara Üniversitesi	2008
B.S.	Anadolu Üniversitesi	2010
High School	Fatih Sultan Mehmet Lisesi	2004

PROFESSIONAL EXPERIENCE

Year	Place	Enrollment
2008-2010	TOBB ETU	Research Assistant
2011-Present	TÜBİTAK	Expert

PUBLICATIONS

Papers published in International Journals:

1 M. U. Akhmet, M. Karacaoren, A Hopfield neural network with multi-compartmental activation, Neural Computing and Applications. (in press).

2 M. U. Akhmet, M. Karacaoren, Stability of Hopfield neural networks with delay and piecewise constant argument. Discontinuity, Nonlinearity, and Complexity 3(1):1-6, 2014.

FELLOWSHIPS

TUBİTAK-2211 Fellowships Program