# MIDDLE IRON AGE POTTERY FROM YASSIHÖYÜK (KIRŞEHIR): A CENTRAL ANATOLIAN ASSEMBLAGE

A Master's Thesis

by

NURCAN KÜÇÜKARSLAN

Department of Archaeology
İhsan Doğramacı Bilkent University
Ankara
August 2017

To my parents

# MIDDLE IRON AGE POTTERY FROM YASSIHÖYÜK (KIRŞEHIR): A CENTRAL ANATOLIAN ASSEMBLAGE

The Graduate School of Economics and Social Sciences
of
İhsan Doğramacı Bilkent University

by

NURCAN KÜÇÜKARSLAN

In Partial Fulfillment of the Requirements for the Degree of
MASTER OF ARTS

THE DEPARTMENT OF ARCHAEOLOGY
İHSAN DOĞRAMACI BILKENT UNIVERSITY
ANKARA

August 2017

I certify that I have read this thesis and have found that it is fully adequate, in scope and in quality, as a thesis for the degree of Master of Arts in the Department of Archaeology.

---

Associate Professor Dr. Marie-Henriette Gates
Supervisor

I certify that I have read this thesis and have found that it is fully adequate, in scope and in quality, as a thesis for the degree of Master of Arts in the Department of Archaeology.

---

Assistant Professor Dr. Charles Warner Gates
Examining Committee Member

I certify that I have read this thesis and have found that it is fully adequate, in scope and in quality, as a thesis for the degree of Master of Arts in the Department of Archaeology.

---

Assistant Professor Dr. Kimiyoshi Matsumura
Examining Committee Member

Approval of the Graduate School of Economics and Social Sciences

---

Professor Dr. Halime Demirkan
Director

ABSTRACT

MIDDLE IRON AGE POTTERY
FROM YASSIHÖYÜK (KIRŞEHIR):
A CENTRAL ANATOLIAN ASSEMBLAGE

Küçükarslan, Nurcan
MA., Department of Archaeology
Supervisior: Assoc. Dr. Marie-Henriette Gates

August 2017

This thesis analyses the Middle Iron Age (MIA) pottery from Yassıhöyük (Kırşehir). The MIA (ca. 9th-8th c. BC) is represented by 3 rooms and 5 pits in three structural phases of the Iron Age level. The thesis aims to understand the Yassıhöyük pottery culture and place this culture among the prominent pottery zones during this period in Central Anatolia. 662 sherds dated to the Iron Age from these deposits have thus been analysed and 456 examples have been included in the catalogue. These represent 70% of the total MIA sample. The typology recognizes four main analytical groups: (1) form, (2) fabric and firing technique, (3) surface treatment and (4) decoration. The main ware types for each form were determined by correlating the analytical groups in the typology. Each ware group sorted itself according to surface color: Red/Reddish Brown Ware (WareType1), Pale Reddish Ware (WareType2), Cream Ware and Grey/Black Ware (WareType5). Firing technique determined a second criterion: Cream Ware with Grey Core (WareType3) and Cream Ware with Orange Core (WareType4). The distribution of the ware types to the deposits are analysed within its own chronology. WareType1, WareType2 and WareType3 occur in all levels starting from the early phase of the MIA which could be local production. WareType4 and WareType5 occur mostly in the latest phase. The Yassıhöyük wares suggest a household production when the quality and variety

in form and decoration are compared with Boğazköy, Gordion and Porsuk. They might have produced local pottery by their own techniques not so professionally as other urban sites, but they show outside influence especially in the later phase of the MIA.

Keywords: Central Anatolia, Middle Iron Age, Pottery, Yassıhöyük.

# ÖZET

## YASSIHÖYÜK (KIRŞEHİR) ORTA DEMİR ÇAĞ SERAMİĞİ: BİR ORTA ANADOLU ÖRNEĞİ

Küçükarslan, Nurcan
Yüksek Lisans, Arkeoloji Bölümü
Tez Danışmanı: Doç. Dr. Marie-Henriette Gates

Ağustos 2017

Bu tez çalışmasında Yassıhöyük (Kırşehir) Orta Demir Çağı seramiği incelendi. Üç yapı katına yayılan 3 oda ve 5 çukur, Orta Demir Çağına tarihlenmiştir. Tezin amacı, Orta Demir Çağı boyunca Yassıhöyük'teki seramik kültürünü anlamak ve genel çerçevede Orta Anadolu'da öne çıkan seramik kültürleri arasındaki yerini saptamaktır. Bu çalışmada 662 ağız parçası incelendi, bunlardan 456 tanesi katalogda gösterildi. Bu oran Orta Demir Çağı seramik grubunun %70'ini temsil etmektedir. Tipolojide form, hamur-pişirme tekniği, yüzey işlem ve desen olmak üzere 4 değerlendirme grubu oluşturuldu. Bu gruplara göre yapılan tipolojide, seramiklerin yüzey renklerine göre kendi içlerinde gruplandığı gözlemlendi: Kırmızı/Kırmızı Kahverengimsi Kaplar (WareType1), Açık Kırmızı Kaplar (WareType2), Krem Kaplar ve Gri/Siyah Kaplar (WareType5). Bunun yanı sıra pişirme tekniği, ikinci bir krater olarak belirlendi: Gri Özlü Krem Kaplar (WareType3) ve Portakal Özlü Krem Kaplar (WareType4). Bu kap çeşitlerinin mimari kalıntılara dağılımı istatistiksel olarak değerlendirildi. Buna göre WareType1, WareType2 ve WareType3 kaplar her safhada bulunması, yerel üretim olması ihtimalini arttırdı. WareType4 ve WareType5 kaplarının görülme sıklığı ise son safhada artıyor. Bu durumda özellikle form ve desendeki kalite ve çeşitlilik, Boğazköy, Gordion ve Porsuk ile karşılaştırıldığında, Yassıhöyük'de daha çok hanesel üretim olduğu sonucuna varılıyor. Fakat bu hanesel

üretimin, Orta Demir Çağı'nın daha geç safhalarına doğru Orta Anadolu'daki diğer seramik kültürlerinden etkilendiği anlaşılıyor.

Anahtar Kelimeler: Orta Anadolu, Orta Demir Çağı, Seramik, Yassıhöyük.

# ACKNOWLEDGEMENTS

I would like to express my deep gratitude to Associate Professor Dr. Marie-Henriette Gates for her patient guidance and valuable suggestions during my research. I would like to extend my special thanks to my examining committee members Assistant Professor Dr. Charles Gates for his advice throughout my MA study and Assistant Professor Dr. Kimiyoshi Matsumura for his critiques of my project and sharing his experience with us on the excavation area.

I would like to express my great appreciation to Dr. Sachihiro Omura (the director of Japanese Institute of Anatolian Archaeology) and Dr. Masako Omura (the director of the Yassıhöyük excavation) for giving me the opportunity to work on the YH MIA pottery assemblage for my MA thesis and to accept me as a member of the team of the Kaman-Kalehöyük and Yassıhöyük excavations since 2013.

I am also indebted to Associate Professor Dr. İlknur Özgen. I would never forget her encouragement to change my career path to archaeology.

I would like to extend my thanks to Ms. Kyoko Morota for her valuable support and Mr. Zinnuri Çöl, Mr. Gencay Çöl, Mr. Kader Sevindir, Mr. Elçin Baş and all local staff of the Japanese Institute of Anatolian Archaeology for their help at both the institute and the site. I would like to thank Mr. Mustafa Tan who is the best chef in the world.

I would like to thank my colleagues Hande Köpürlüoğlu, Zeynep Akkuzu, Nurcan Aktaş and all colleagues from the MA office, and my best friends Sema Kamışlı, Sezin Yıldız, Fulden Selçuk, Zeynep Kuleli Karaşahan, Cemre Kahveci, Irmak Çiçek, Erdoğan Şekerci, Seyfülislam Özdemir, Zeynep Çesmeli, Nazlı Kaya, my cordial friends from JIAA Lourdes Mesa Garcias, Shota Iwamoto, Şiar Can Şener, and my dear cousin Emel Gedik. They took many different roles like therapists, improviser or life coach during my thesis work and MA study.

Finally, I would like to thank my dear parents for always encouraging me to follow my dreams. I would never have been able to succeed without your encouragement, support and love. I hope I would be a daughter who deserves your dedication. I would like to extend my special thanks to my grandparents for their always best wishes and support. I love you all members of little lion family.

# TABLE OF CONTENTS

ABSTRACT ..... vi

ÖZET ..... viii

ACKNOWLEDGEMENTS ..... x

TABLE OF CONTENTS ..... xii

LIST OF TABLES ..... xvii

LIST OF FIGURES ..... xviii

CHAPTER 1: INTRODUCTION ..... 1

1.1 Objectives of the Thesis ..... 1

1.2 General Outline of the Thesis ..... 3

CHAPTER 2: A BRIEF OVERVIEW OF YASSIHÖYÜK ..... 6

2.1 Location ..... 6

2.2 Geographical Landscape ..... 6

2.3 Historical Landscape ..... 7

2.4 Field Surveys and Excavation History ..... 8

2.5 Yassıhöyük Stratigraphy ..... 8

2.6 Grid System ..... 9

2.7 Excavation System ..... 9

2.8 The YH MIA Occupational Phases ..... 10

2.8.1 Phase I-11 ..... 11

2.8.1.1 R(oom)33, E8/d8-d9 (Figure 5-6) ..... 11

2.8.1.2 R(oom)59, E8/d8 (Figure 5-6) ..... 11
2.8.2 Phase I-10 ..... 12
2.8.2.1 R(oom)65, E8/d8 (Fig. 5-6) ..... 12
2.8.3 Phase I-9/I-10 ..... 13
2.8.3.1 P(it)74, E8/d8 (Fig. 5-6) ..... 13
2.8.3.2 P(it)87, E8/d8 (Fig. 5-6) ..... 13
2.8.3.3 P(it)78, E8/d8 ..... 13
2.8.4 Phase I-9 ..... 14
2.8.4.1 P(it)41, E8/d9 (Fig. 5-6) ..... 14
2.8.4.2 P(it)34, E8/f10 (Fig. 5) ..... 14
CHAPTER 3: THE ANALYSIS OF THE YASSIHÖYÜK MIA POTTERY GROUP ..... 15
3.1 Methodology ..... 15
3.1.1 The YH MIA Deposits ..... 15
3.1.2 The Context of the YH MIA Deposits ..... 15
3.1.3 The Thesis Samples ..... 16
3.1.4 The Catalogue Samples ..... 16
3.2 Typology ..... 16
3.2.1 Introduction ..... 16
3.2.2 Main Classes ..... 17
3.2.2.1 Form ..... 17
3.2.2.1.1 Open Vessels ..... 18
3.2.2.1.1.1 Bowls ..... 18
3.2.2.1.1.2 Jugs with Round Mouth ..... 18
3.2.2.1.2 Closed Vessels ..... 19
3.2.2.2 Fabric and Firing Technique ..... 19
3.2.2.3 Surface Treatment ..... 19

3.2.2.4 Decoration ..... 19
3.3 Correlations ..... 20
3.3.1 Open Vessels ..... 20
3.3.1.1 Bowls with Plain Rim ..... 20
3.3.1.1.1 Red/Reddish Brown Bowls with Plain Rim (B1) ..... 20
3.3.1.1.2 Pale Reddish Bowls with Plain Rim (B2) ..... 21
3.3.1.1.3 Cream Bowls with Plain Rim and Grey Core (B3) ..... 22
3.3.1.1.4 Cream Bowls with Plain and Orange Core (B4) ..... 23
3.3.1.1.5 Grey/Black Bowls with Plain Rim (B5) ..... 24
3.3.1.2 Bowls with Flaring Rim ..... 25
3.3.1.2.1 Red/Reddish Brown Bowls with Flaring Rim (F1) ..... 25
3.3.1.2.2 Pale Reddish Bowls with Flaring Rim (F2) ..... 26
3.3.1.2.3 Cream Bowls with Flaring Rim and Grey Core (F3) ..... 26
3.3.1.2.4 Cream Bowls with Flaring Rim and Orange Core (F4) ..... 27
3.3.1.2.5 Grey/Black Bowls with Flaring Rim (F5) ..... 28
3.3.1.3 Jugs with Round Mouth ..... 28
3.3.1.3.1 Red/Reddish Brown Round-Mouthed Jugs (R1) ..... 28
3.3.1.3.2 Pale Reddish Round-Mouthed Jugs (R2) ..... 29
3.3.1.3.3 Cream Round-Mouthed Jugs with Grey Core (R3) ..... 29
3.3.1.3.4 Cream Round-Mouthed Jugs with Orange Core (R4) ..... 30
3.3.2 Closed Vessels ..... 31
3.3.2.1 Jugs with Pinched Mouth ..... 31
3.3.2.1.1 Red/Reddish Brown Pinched-Mouthed Jugs (P1) ..... 31
3.3.1.3.5 Black/Grey Round-Mouthed Jugs (R5) ..... 31
3.3.2.1.2 Pale Reddish Pinched-Mouthed Jugs (P2) ..... 31
3.3.2.1.3 Cream Pinched-Mouthed Jugs with Grey Core (P3) ..... 32
3.3.2.1.4 Cream Pinched-Mouthed Jugs with Orange Core (P4) ..... 32

3.3.2.1.5 Grey/Black Pinched-Mouthed Jugs (P5) ..... 33
3.3.2.2 Cooking Pots ..... 33
3.3.2.2.1 Reddish Brown/Red Cooking Pot (C1) ..... 33
3.3.2.2.2 Pale Reddish Red Cooking Pot (C2) ..... 34
3.3.2.2.3 Cream Cooking Pot with Grey Core (C3) ..... 34
3.3.2.2.4 Cream Cooking Pot with Orange Core (C4) ..... 35
3.3.2.2.5 Grey/Black Cooking Pots (C5) ..... 35
3.3.2.3 Kraters ..... 35
3.3.2.3.1 Red/Reddish Brown Kraters (KR1) ..... 36
3.3.2.3.2 Pale Reddish Krater (KR2) ..... 36
3.3.2.3.3 Cream Kraters with Grey Core (KR3) ..... 37
3.3.2.3.4 Cream Kraters with Orange Core (KR4) ..... 37
3.3.2.3.5 Black/Grey Kraters (KR5) ..... 38
3.3.2.4 Pithoi ..... 38
3.3.2.4.1 Reddish Brown/Red Pithoi (PT1) ..... 39
3.3.2.4.2 Pale Reddish Pithoi (PT2) ..... 39
3.3.2.4.3 Cream Pithoi with Grey Core (PT3) ..... 40
3.3.2.4.4 Cream Pithos with Orange Core (PT4) ..... 40
3.4 The YH Ware Types ..... 40
3.4.1 Red/Reddish Brown Wares (WareType1) ..... 41
3.4.2 Pale Reddish Wares (WareType2) ..... 41
3.4.3 Cream Wares with Grey Core (WareType3) ..... 42
3.4.4 Cream Wares with Orange Core (WareType4) ..... 43
3.4.5 Grey/Black Wares (WareType5) ..... 44
CHAPTER 4: THE RELATION BETWEEN CHRONOLOGY AND AND STRATIGRAPHY ..... 45
CHAPTER 5: COMPARISONS BETWEEN YASSIHÖYÜK AND OTHER

MAIN SITES IN CENTRAL ANATOLIA ..... 49
5.1 Methodology for Pottery Comparisons ..... 49
5.2 Comparisons ..... 50
5.2.1 Yassıhöyük and Kaman-Kalehöyük ..... 50
5.2.1.1 Form Comparison ..... 50
5.2.1.2 Ware Comparison ..... 51
5.2.2 Yassıhöyük and Boğazköy ..... 52
5.2.3 Yassıhöyük and Gordion ..... 52
5.2.4 Yassıhöyük and Porsuk ..... 53
5.3 Summary ..... 54
CHAPTER 6: CONCLUSION ..... 57
REFERENCES ..... 60

LIST OF TABLES

1. Distances between Yassıhöyük and other main sites in Central Anatolia ..... 63
2. Distribution of sherds from the MIA features in Yassıhöyük ..... 64
3. Main ware types according to vessel forms ..... 64
4. Frequency analysis of ware types for MIA features ..... 65
5. Frequency analysis of ware types for MIA phases ..... 65
6. Comparative types from Yassıhöyük and Kaman-Kalehöyük ..... 66

LIST OF FIGURES


1. Yassıhöyük and other main sites in Turkey (adapted from ginkgomaps.com) ..... 67
2. Yassıhöyük and other sites in Central Anatolia (adapted from ginkgomaps.com) ..... 67
3. Aerial view of Yassıhöyük: the triangle shows the excavation area (Omura, 2008: Fig. 2) ..... 68
4. The geographic landscape around Yassıhöyük (adapted from Google Maps) ..... 68
5. MIA deposits according to the grid plan (adapted from the excavation digital drawings of Yassıhöyük) ..... 69
6. MIA deposits in the trenches E8/d8 (left) and E8/d9 (right) ..... 69
7. Chronological order of the MIA deposits (adapted from the excavation digital archive of Yassıhöyük) ..... 70
8. Main classes for typology ..... 70
9. Bowl forms with plain rim (BP) and flaring rim (BF) ..... 71
10. Bowl forms with plain rim (BP) ..... 71
11. Measurements for x- and y-axis on bowls with flaring rim (BF) ..... 72
12. Bowl forms with flaring rim (BF) ..... 73
13. Jug forms with round mouth (RJ) ..... 74
14. Closed vessels ..... 74
15. Categories for fabric and firing technique ..... 75
16. Categories for surface treatment ..... 75
17. Bowl types with plain rim (B1, B2, B3, B4 and B5) ..... 76
18. Bowl types with flaring rim (F1, F2, F3, F4 and F5) ..... 76
19. Round-mouthed jug types (R1, R2, R3, R4 and R5) ..... 76
20. Pinched-mouthed jug types (P1, P2, P3, P4) ..... 77
21. Cooking pot types (C1, C2, C3, C4) ..... 77

22. Krater types (KR1, KR2, KR3, KR4 and KR5) ..... 77
23. Pithos types (PT1, PT2, PT3 and PT4) ..... 78
24. The YH MIA ware types ..... 78
25. Red/reddish brown wares (WareType1) ..... 79
26. Pale reddish wares (WareType2) ..... 80
27. Cream wares with grey core (WareType3) ..... 81
28. Cream wares with cream core (WareType4) ..... 82
29. Grey/black wares (WareType5) ..... 83
30. Frequency analysis of MIA ware types ..... 84
31. Pottery zones in Iron Age Central Anatolia (Kealhofer, et al. 2009: fig. 1) .. 84
32. Bowls with plain rim (BP3, BP5, BP8) from Yassıhöyük and Kaman-Kalehöyük (Matsumura, 2005: Pl. 109, 111) ..... 85
33. Bowls with flaring rim (BF1-BF3) from Yassıhöyük and Kaman-Kalehöyük (Matsumura, 2005: Pl. 116-117, 119) ..... 86
34. Round-mouthed jugs (RJ1-RJ2) from Yassıhöyük and Kaman-Kalehöyük (Matsumura, 2005: Pl. 102) ..... 87
35. Pinched-mouthed jugs (PJ1-PJ3) from Yassıhöyük and Kaman-Kalehöyük (Matsumura, 2005: Pl. 142-143) ..... 87
36. Cooking pots (CE-CV) from Yassıhöyük and Kaman-Kalehöyük (Matsumura, 2005: Pl. 127, 129) ..... 88
37. Kraters (K2-K3) from Yassıhöyük and Kaman-Kalehöyük (Matsumura, 2005: Pl. 131, 133, 135) ..... 89
38. Pithoi (P1-P2) from Yassıhöyük and Kaman-Kalehöyük (Matsumura, 2005: Pl. 124) ..... 89
39. Grey/black vessels types (WareType5) from Yassıhöyük and Kaman-Kalehöyük (Matsumura, 2005: Pl. 69, 70, 108, 114, 151, 154, 231) ..... 90
40. Medium grey/black burnished wares (WareType5) from Yassıhöyük and Kaman-Kalehöyük (Matsumura, 2005: Pl. 102, 118-119, 135, 210) ..... 91
41. Kraters (K1-K4) from Yassıhöyük and Boğazköy (Bossert, 2000: Pl. 6, 196-197 (North West Slope); 47 (Büyükkaya); 62, 63, 117, 207, 220, 229, 238 (Büyükkale)) ..... 92
42. Bowls with flaring rim (BF1-BF3) from Yassıhöyük and Boğazköy (Bossert, 2000: Pl. 75, 905 (North West Slope); 879, 884, 895 (Büyükkaya); 928 (Büyükkale)) ..... 93

43. Bowls with flaring rim (BF2-BF5) and kraters (K2) from Yassıhöyük and Gordion (Sams, 1994: fig. 9-10, 52-53) ..... 93
44. Bowls with plain rim (BP1, BP5, BP7) from Yassıhöyük and Porsuk IV (Dupré, 1984: Pl. 45-49) ..... 94
45. Bowls with plain rim (BP4, BP5, BP6, BP8) from Yassıhöyük and Porsuk III (Dupré, 1984: Pl. 63) ..... 94
46. Round-mouthed jugs (RJ1-RJ2) from Yassıhöyük and Porsuk IV (Dupré, 1984: Pl. 51) ..... 95
47. Round-mouthed jugs (RJ2-RJ3) from Yassıhöyük and Porsuk III (Dupré, 1984: Pl. 81) ..... 95
48. Pinched-mouthed jugs (PJ2) from Yassıhöyük and Porsuk III (Dupré, 1984: Pl. 85) ..... 96
49. Cooking pots (CE-CV) from Yassıhöyük and Porsuk III (Dupré, 1984: Pl. 86) ..... 96
50. Color coding for the YH MIA deposits in catalogue ..... 97
51. Summary of bowl types with plain rim (BP1-BP8) ..... 98
52. Summary of bowl type BP1 ..... 99
53. BP1 bowls ..... 100
54. Descriptive catalogue of BP1 bowls ..... 101
55. Summary of bowl type BP2 ..... 102
56. BP2 bowls ..... 103
57. Descriptive catalogue of BP2 bowls ..... 104
58. Summary of bowl type BP3 ..... 105
59. BP3 bowls ..... 106
60. BP3 bowls ..... 107
61. BP3 bowls ..... 108
62. Descriptive Catalogue of BP3 bowls ..... 109
63. Descriptive Catalogue of BP3 bowls ..... 110
64. Descriptive Catalogue of BP3 bowls ..... 111
65. Summary of bowl type BP4 ..... 112
66. BP4 bowls ..... 113
67. BP4 bowls ..... 114
68. Descriptive Catalogue of BP4 bowls ..... 115
69. Summary of bowl type BP5 ..... 116

70. BP5 bowls ..... 117
71. BP5 bowls ..... 118
72. Descriptive Catalogue of BP5 bowls ..... 119
73. Descriptive Catalogue of BP5 bowls ..... 120
74. Summary of bowl type BP6 ..... 121
75. BP6 bowls ..... 122
76. BP6 bowls ..... 123
77. Descriptive Catalogue of BP6 bowls ..... 124
78. Summary of bowl type BP7 ..... 125
79. BP7 bowls ..... 126
80. BP7 bowls ..... 127
81. Descriptive Catalogue of BP7 bowls ..... 128
82. Summary of bowl type BP8 ..... 129
83. BP8 bowls ..... 130
84. BP8 bowls ..... 131
85. Descriptive Catalogue of BP8 bowls ..... 132
86. Descriptive Catalogue of BP8 bowls ..... 133
87. Descriptive Catalogue of BP8 bowls ..... 134
88. Summary of bowl type BP9 ..... 135
89. Descriptive Catalogue of BP9 bowls ..... 136
90. Descriptive Catalogue of BP9 bowls ..... 137
91. Descriptive Catalogue of BP9 bowls ..... 138
92. Summary of bowl type with flaring rim (BF1-BF5) ..... 139
93. BF1 bowls ..... 140
94. BF1 and BF2 bowls ..... 141
95. BF2 bowls ..... 142
96. BF2 bowls ..... 143
97. BF2 and BF3 bowls ..... 144
98. BF3, BF4 and BF5 bowls ..... 145
99. Descriptive Catalogue of BF bowls ..... 146
100. Descriptive Catalogue of BF bowls ..... 147
101. Descriptive Catalogue of BF bowls ..... 148
102. Summary of round-mouthed jug type RJ ..... 149
103. RJ1round-mouthed jugs ..... 150

104. RJ2 round-mouthed jugs ..... 151
105. RJ2 round-mouthed jugs ..... 152
106. RJ3 round-mouthed jugs ..... 153
107. Descriptive Catalogue of RJ jugs ..... 154
108. Descriptive Catalogue of RJ jugs ..... 155
109. Descriptive Catalogue of RJ jugs ..... 156
110. Summary of pinched-mouthed jug types PJ ..... 157
111. PJ1 and PJ2 pinched-mouthed jugs ..... 158
112. PJ3-PJ6 pinched-mouthed jugs ..... 159
113. Descriptive Catalogue of PJ jugs ..... 160
114. Descriptive Catalogue of PJ jugs ..... 161
115. Descriptive Catalogue of PJ jugs ..... 162
116. Summary of cooking pot types CE ..... 163
117. CE1-CE3 cooking pots ..... 164
118. CE4 cooking pots ..... 165
119. CE5-CE6 cooking pots ..... 166
120. CE7-8 cooking pots ..... 167
121. Summary of CV cooking pots ..... 168
122. CV1-CV5 cooking pots ..... 169
123. Summary of CI cooking pots ..... 170
124. CI1-CI5 cooking pots ..... 171
125. Descriptive Catalogue of CE, CV, CI cooking pots ..... 172
126. Descriptive Catalogue of CE, CV, CI cooking pots ..... 173
127. Descriptive Catalogue of CE, CV, CI cooking pots ..... 174
128. Summary of krater types K ..... 175
129. K1 kraters ..... 176
130. K1 kraters ..... 177
131. K2 kraters ..... 178
132. K2 kraters ..... 179
133. K3 kraters ..... 180
134. K4 kraters ..... 181
135. K1-K4 jars ..... 182
136. K3-K4 jars ..... 183
137. Descriptive Catalogue of krater types K ..... 184

138. Descriptive Catalogue of krater types K ..... 185
139. Descriptive Catalogue of krater types K ..... 186
140. Summary of pithos type P ..... 187
141. P1 pithoi ..... 188
142. P1 pithoi ..... 189
143. P2 pithoi ..... 190
144. P3 pithoi ..... 191
145. P3 pithoi ..... 192
146. Descriptive Catalogue of P pithoi ..... 193
147. Descriptive Catalogue of P pithoi ..... 194

# CHAPTER I

# INTRODUCTION

## 1.1 Objectives of the Thesis

In this thesis, I will study a group of ceramics which were unearthed from the deposit dated to the Middle Iron Age (MIA) level of Yassıhöyük. Yassıhöyük (YH) is a mound located 160 km southeast of Ankara (Omura, 2008: 99). It extends over ca. 19 ha with 13 m in height (Omura, 2008: 101). A team from the Japanese Institute of Anatolian Archaeology (JIAA) conducted comprehensive field surveys on the mound in 2007 and 2008 (Omura, 2008: 97; Omura, 2016a: 14-16). The site has been excavated under the direction of Masako Omura since 2009.The stratigraphy of the höyük has been determined throughout the excavation seasons so far. There is a sequence of settlement levels starting from Early Bronze Age to Late Iron Age at the site (Omura, 2016a: 16-17).

The MIA is at present represented by 3 rooms and 5 pits, which were excavated during the seasons 2011, 2013 and 2014 (ca. 9$^{th}$-8$^{th}$ c. BC). The rooms are R33 from the trench E9/d8 in Area 1 (Omura, 2013) and R65, R59 from the trench E8/d8 (Omura, 2015). The pits are P74, P78, P87 from the trench E8/d8, P41 the trench E9/d8 (Omura, 2013) and P34 from the trenches E9/f10 & E9/g10 in Area 1 (Omura, 2013). Many criteria like architectural relationships or the findings with diagnostic features to MIA like fibulae in Phrygian type and Alişar IV ceramics (Omura, 2016a: 28-29, 38-39) have been considered to date all these deposits to the MIA level.

However, the pottery sherds from those MIA deposits have not been studied in detail so far. Therefore, I aim to study the YH MIA pottery group in detail in this thesis.

The historical context of the site during this period is suggested by two lead strips with Luwian hieroglyphs, found on the surface of the höyük at separate times (2006 and 2010). Aydoğan and Hawkins date the first lead strip, the 'Kırşehir Letter' to around the second half of the 8th c. BC (2009:11). They consider that the name of 'Tuwati' in this letter might refer to the father of 'Wassurme/Wassusarma' who was one of the kings from the Tabal region giving tribute to Assyria (Aydoğan & Hawkins, 2009: 11; Weeden, 2013: 15-16). They also underline that the 'Kırşehir Letter's Luwian hieroglyphs are at the furthermost north-western findspot in Central Anatolia so far within the context of the Iron Age (Aydoğan & Hawkins, 2009: 7). Another lead strip with Luwian hieroglyphs was found on the surface again in the 2010 excavation season. According to Mark Weeden, it dates to a similar period, the 8th-7th c. BC, and is a possible 'join' for the 'Kırşehir Letter' found in 2006 (2017: 17). All those important findings might signal the existence of a community which could be politically associated with the Tabal region at YH during MIA. This situation makes me interested to figure out the culture of that community, especially through a pottery study.

Another issue is H. Genz's proposal that describes an invisible border starting from the direction of Konya through the Salt Lake up to the north of Halys River to separate two main pottery zones in Central Anatolia during MIA (2011: 349). To the west side, he draws attention to 'monochrome grey wares' which could be observed densely in Gordion (2011: 348; Matsumura, 2000: 120). To the east side, Genz underscores the density of 'painted pottery with matt dark paint' as well as animal and geometric motifs as seen in Boğazköy or Alişar Höyük (2011: 349). Thus, it is another point which should be considered about YH because the site is very close to this invisible border between these pottery zones suggested by Genz. One of my goals is to observe the situation for the group of pottery from YH in terms of these different pottery cultures. I would like to find answers to the questions of which pottery culture affected YH the most: Gordion from the west, Boğazköy from the

east or the Tabal Region from the south. Another option is whether YH developed its own pottery style without any impact from elsewhere, or showing very slight influence.

If I reach answers to those questions, we would have a chance to place the pottery culture of YH among the prominent pottery zones in Central Anatolia. This situation might give two main opportunities for both YH and the common chronology for the sites in Central Anatolia. This thesis will be helpful to review the level of MIA in the overall stratigraphy of YH which has been still processed. As Genz underlines (2011: 333), each site in Central Anatolia has its own chronology for the Iron Age rather than a common chronology which could be followed by all sites. It thus becomes complicated to coordinate a pottery study throughout Central Anatolia. This thesis might be a small contribution to establish a common chronology for the MIA by including one-to-one and overall comparisons between pottery zones, so that any site having a MIA level could utilize this thesis in their pottery researches.

### 1.2 General Outline of the Thesis

To mention the outline of the thesis briefly, Chapter 2 will give information about YH's field surveys, its excavation history and its stratigraphy which has been processed so far. This part will give the reader an overview about the site. Furthermore, the excavation system will be explained so that the reader can understand the stratigraphical relationship between the deposits from which the pottery samples of the thesis were excavated. At this point, I also plan to give the reasons why these specific deposits have been dated to the MIA level in the chronology of YH. Therefore, this chapter will be helpful to follow the contexts for YH throughout the thesis.

Chapter 3 will consist of three sections which are Methodology, Typology and Correlations. In the first part of Methodology, I specify the scope of pottery group that I study since I only concentrated on pottery sherds having a rim in this thesis, instead of body sherds, bottom parts or handles because of the limitation on pages and time for an MA thesis. Then, I will present how many pottery sherds with rim

were collected from these deposits. I will explain how I separated the samples from this group of pottery for my thesis and how I distinguished the pottery sherds intruding from the earlier periods, especially in the context of pits. The second part of this section will demonstrate the methodology which I follow for my typology: which criteria I consider while categorizing the pottery samples like form, fabric, surface treatment, firing technique and decoration style.

In the Typology section of Chapter 3, I will go into detail for each classification mentioned in Methodology section (form, fabric, surface treatment, firing techniques and decoration style). I will describe how many sub-groups I decided to form as well as the diagnostic features for each main group and the sub-groups. In short, this section will provide 'guidelines' for the catalogue of the thesis.

In the Correlations section of Chapter 3, the main types for each form will be determined by correlating the main groups in Typology section. The many subheadings here will be thus included like 'form', 'fabric', 'surface treatment' and 'decoration style' as many as needed. For instance, I will analyse the pottery samples having a similar main form but also showing the similar surface treatment.

In Chapter 4, I will continue to analyse the catalogue but this time in terms of the depositional contexts. The chronological relationship between the contexts can be understood if they interrupt each other on the excavation site or by tracing the sequence of deposits interrupting each other. In this case, this relationship confirmed architecturally could be used as a base to verify the chronological relationship between pottery samples. For instance, this type of analysis could be performed for the comparison between the pottery group from the pit P74 and the group from the pit P87, which is older than P74 because of the intrusion by P74. In short, architectural relationships and pottery relationships will serve each other. If I manage this comprehensive analysis, I will get an overview, which would be confirmed in terms of architecture and pottery, for the MIA level of the YH chronology. Once this correlation between pottery and deposit can be established, the YH MIA pottery

group will be ready for comparison with the MIA pottery samples from other sites in Central Anatolia.

In Chapter 5, the YH MIA pottery group will be compared with the MIA pottery collections from others sites in Central Anatolia. I limit the scope to sites which have adequate publications about their MIA pottery. Genz's article (2011), which highlights the sites having a clear MIA level, and Matsumura's Ph.D (2005) thesis, which compares Kaman-Kalehöyük with four main sites in Central Anatolia, determined my choice of sites to compare the YH pottery group. My aim also is to place the YH pottery culture during MIA among the pottery zones in Central Anatolia. Therefore, in this chapter, there will be comparisons between YH and Kaman-Kalehöyük (in nearest area), Gordion (from the west), Boğazköy & Alişar Höyük (from the east) and Porsuk (from the south). These comparisons will not be too detailed because of the limitations in the length and timing of the thesis.

Chapter 6, the conclusion of the thesis, will summarize the analyses conducted so far throughout the thesis briefly. I will conclude the results of these analyses considering the contribution for the pottery culture of the YH MIA level as well as the sub-chronology of this level and also the place of this pottery culture among ceramic zones in Central Anatolia.

# CHAPTER 2

# A BRIEF OVERVIEW OF YASSIHÖYÜK

## 2.1 Location

Yassıhöyük (YH) is a mound located at the southwest of the Halys bend in Central Anatolia. The site is near Çayağzı village, 25 km northwest of Kırşehir (Omura, 2008: 99). It extends over ca. 19 ha with 13 m in height (Omura, 2008: 101). To visualize the location of Yassıhöyük in Central Anatolia within its human landscape, it is useful to relate its distance to significant main sites in Central Anatolia such as Kaman-Kalehöyük, Gordion, Boğazköy, Alişar Höyük and Porsuk (Fig. 1). For instance, one of the features that Google Map provides, the foot distance between locations, has been utilized for Table 1. This way of estimating distance would be more accurate to imagine the effort that the Yassıhöyük community put to reach other sites and the Halys River at that time. The information about the distances on walking will be reviewed again in Chapter 5, when considering the comparisons between the MIA pottery groups of YH and other sites mentioned in Table 1.

## 2.2 Geographical Landscape

Yassıhöyük is surrounded by the *Baran Mountain* (1677 masl), the *Bozçal Mountain* (ca. 1800 masl), the *Naldöken Mountain* (ca. 1600 masl) and the *Kervansaray Mountains* (1679 masl) on the south (Omura, 2008: 99-100; Omura, 2016a: 11-13) (Fig. 4). All those mountains include sources of crystalized calcareous stone and marble as well as gneiss, mica schist, quartzite, quartzite schist, granite and granitoid

(Sayhan, 2006: 79). Moreover, Yassıhöyük is encircled on the north by *hills* that contain calcareous schists (Omura, 2016a: 11-13; Sayhan 2006: 79-80). The *Kılıçözü Stream* is passing northeast of the site, flowing in a north-south direction towards Kırşehir and joining the *Kızılırmak River* at Gözler village (Omura, 2016a: 11-13; Sayhan, 2006: 78) (Fig. 4). Karst springs feed into this tributary of the *Kızılırmak River* (Sayhan, 2006: 78).

### 2.3 Historical Landscape

To consider the historical landscape around YH during the MIA briefly, Sams draws attention to the continuation of Luwian hieroglyphs in the 1st mill. BC in the Tabal region (Sams, 2011: 604-605), the south and southeastern area of YH (Sams, 2011: 605). Sams notes that Assyrian sources are also helpful to visualize the historical landscape within Central Anatolia like Shalmaneser III's 'expedition' to Central Anatolia around the Tabal region during the 9th c. BC (Sams, 2011: 606). He underlines that the presence of at least twenty kingdoms paying tribute to Assyria in the Tabal region could be referred from Assyrian sources during the reign of Shalmaneser III (Sams, 2011: 609).

To look at the west of YH, Sams draws attention to Phrygia (Sams, 2011: 607). He notes that the 'Phrygian alphabetic script' was used by a member of the Indo-European language family, but is not related to those from Anatolia, and appeared around the middle of the 8th c. BC in Anatolia (Sams, 2011: 607).

East of YH, Sams points to the diagnostic pottery style of 'silhouette animals' seen in Kültepe and Alişar Höyük (Sams, 2011: 609). He proposes that Kültepe could be included on the boundary of the Tabal region because the orthostats excavated from the citadel are similar in style with those from Carchemish (Sams, 2011: 609). However, Sams does not consider that the boundary of the Tabal region reaches as far north as Boğazköy although the site shows a continuation based on pottery from the 9th c. BC to earlier periods (Sams, 2011: 609).

## 2.4 Field Surveys and Excavation History

Information about the history of the field surveys conducted around Yassıhöyük is provided by M. Omura (Omura, 2008: 97). Yassıhöyük was first recorded in the field survey that P. Meriggi conducted in 1964 before his Topaklı excavation (cited in Omura, 2008: 97; Mikami & Omura, 1987). The site was also researched in the field surveys under the direction of Sachihiro Omura in 1986, 1988, 2000 and 2002 (Omura, 2008: 97). Finally, a comprehensive field survey specifically focused on YH was conducted under the direction of Masako Omura in 2007 and 2008 (Omura, 2016a: 14). After these surveys, the site has been excavated under her direction since 2009. The excavation team has determined a sequence of settlement levels starting from Early Bronze Age to Late Iron Age at the site (Omura, 2016a: 16-17). The MIA is at present represented by 3 rooms and 5 pits. Room R33 and pits P34, P41 were excavated in 2011 (Omura, 2013). Rooms R65, R59 and pits P74, P78, P87 were excavated in 2013 (Omura, 2015). The lower deposit of P78 were uncovered later, in 2014.

## 2.5 Yassıhöyük Stratigraphy

The excavation team has identified three main strata at Yassıhöyük. Stratum I, dating to the Iron Age, includes at least 12 phases based on building remains as well as many phases based on pits (Omura, 2016a: 16). Omura underscores that most of those levels in Stratum I involve Late Iron Age buildings: their architectural style is similar with Kaman-Kalehöyük IIa (LIA) having a central room surrounded by multi-rooms and corridors (Omura, 2016a: 17). They contain a considerable number of fine black-polished wares and bichrome/trichrome wares, seen in the Kaman-Kalehöyük IIa LIA level (ca. 6$^{th}$-5$^{th}$ c. BC) (Omura, 2016a: 17; Omura, 2016b: 35).

Preceding the LIA levels, Omura has defined at least three MIA occupational phases (I-9, I-10 and I-11) (Omura, 2016a: 17), which will be analysed in detail below (section 7. Excavation System). Omura draws attention to Alişar IV ceramics uncovered from those levels, which are contemporary with the Kaman-Kalehöyük IIc MIA level (8$^{th}$-7$^{th}$ c. BC) (Omura, 2016a: 17, 20, 38-39). In addition to Alişar IV ceramics, the architectural features of the buildings from the MIA level are one room

in half-basement style, like those from the Kaman-Kalehöyük IIc MIA structures (Omura, 2016b: 33). Omura also notes that some pottery sherds from those deposits point to the existence of the EIA in Yassıhöyük (Omura, 2016a: 17).

Stratum II dates to the Middle Bronze Age uncovered especially in recent seasons (the first half of 2nd mill. BC) (Omura, 2016b: 33). Stratum III dates to the Early Bronze Age (2260-2135 BC by C14 analysis) (Omura, 2016a: 20; Omura, 2016b: 33).

### 2.6 Grid System

A dual grid system was chosen for Yassıhöyük and applied to the topographic map of the site (Omura, 2008: 101). In this dual system, there are large grids (100m x 100m); each large grid includes 100 small grids (10m x 10m) (Omura, 2016a: 16). These large grids are arranged in a horizontal row labelled A to I from south to north, and in a vertical column numbered 1 to 13 from west to east on the site covering 1.5 $km^2$. The scope of large grids thus is between A1 (southwesternmost) – I13 (northeasternmost). For instance, R59 was uncovered in the trench E8/d8. In this case, E8 shows the *large grid* and d8 shows the *small grid*, which corresponds to a location on the centre of the mound. Since 2009, 16 small grids have been excavated on the centre of the mound (Omura, 2016a: 16). Here is an overview on the trenches where the MIA deposits were excavated (Fig. 5 and Fig. 6 (close-up view)):

Rooms: R33: E8/d9
R65 & R59: E8/d8

Pits: P74, P78, P87: E8/d8
P41: E8/d9
P34: E9/f10 & E9/g10

### 2.7 Excavation System

The excavation system applied on the site is the *provisional layer* (PL) system, the methodology similar to both the Kaman-Kalehöyük and Büklükale excavations. As

Matsumura explains in his PhD thesis (2005), *provisional layer* is the smallest unit defining an individual feature (pit, room, hearth, installation, etc.), an individual soil according to hardness or color, or an individual deposit. If the excavator identifies any change in the trench, s/he assigns a new *provisional layer* and fills the *provisional layer diary* prepared for each trench, before starting to excavate this level. In the diary, the excavator sketches the trench to show this change and explains why a new provisional layer is assigned. The diary describes the change of soil or newly encountered feature, and also gives information about the nature of this new deposit like its color, darkness, hardness, wetness, or what it contains: burned soil ash, charcoal, etc.

### 2.8 The YH MIA Occupational Phases

The excavation team has identified 3 occupational phases dated to MIA under the Stratum I (Iron Age): *I-9* (latest), *I-10* and *I-11* (earliest) (Omura, 2016a: 17). All MIA deposits from these phases were uncovered in the centre of the höyük and the southwestern part of the excavation area (Area 1) (Figure 3&5).

*I-11* covers 2 rooms R33 and R59. *I-10* includes another room R65. *I-9* covers just two pit deposits P41 and P34. However, P74, P87 and P78 have not been dated to a major occupational phase. According to their contextual relationship, P74 and P87 intrude into R65 (*I-10*). P74 and P87 date later than *I-10* but it is not clear whether these deposits are contemporary with *I-9*. I have thus formed a sub-layer between *I-9* and *I-10* to locate the deposits P74 and P87 in the stratigraphy. On the other hand, the deposit P78 does not have any contextual relationship with other MIA features. In the Harris matrix developed by the excavation team so far, this deposit has been added to the same level with P74 and P87. All these pit deposits also have similar content with ash soil layer and cut into the same yellow deposit. I have thus added P78 at the sub-occupational phase between *I-9* and *I-10* (as *I-9/I-10*). The archaeological context information about these occupational phases and the related deposits will be mentioned phase by phase below.[1]

[1] The pottery assemblage from each deposit is illustrated in a different color (Fig. 50).

### 2.8.1 Phase I-11

#### 2.8.1.1 R(oom)33, E8/d8-d9 (Figure 5-6)

Only a small area of R33 is contained in the excavation area. The room is represented by its northeast part, and is bordered by east wall W78, which turns a corner at its north end. The room cuts into the underlying Stratum III (Early Bronze Age). Two deposits were excavated in the room as PL 54 (E8/d8) and PL 36 (E8/d9). A light white floor was found at the base of PL 36. The room is cut into by the MIA pit P41 (I-9). The north crosswall of W78 is cut by the LIA pit P140.

**Provisional layer 36**: This deposit is a soft yellow ashy soil with a small amount of charcoal, mud brick and bone. It overlies the floor of R33. Thickness: ca. 65 cm, sloping down from east to west.

**Provisional layer 54**: This upper fill is a soft grey soil with a moderate amount of bone and a small amount of ash and burned soil. The floor was not found underneath this deposit. Thickness: ca. 45 cm.

**Pottery finds for R33** (PL 54, 36 combined): 1 painted and 7 plain MIA sherds.

#### 2.8.1.2 R(oom)59, E8/d8 (Figure 5-6)

This room is enclosed by walls on three sides: its plastered north and east walls W143 and W144, and west wall W175. The south part of the room and its south wall lie outside the excavation limits. The room was in half-basement style, and cuts through a burnt red deposit into the underlying Stratum III (Early Bronze Age). A bench was set against the three half-basement walls. Four deposits were excavated in the room as PL 34, 47, 48 and 49. Two floors were defined: the original half-basement floor at the base of PL 49, and a later surface after the basement was filled in (PL 48). The room is cut into by the LIA deposit P73, the MIA room R65 (I-10), and the probably MIA deposit P111. R59 is similar in style with rooms from the Kaman-Kalehöyük IIc-1 MIA structures (Omura, 2016b:33).

**Provisional layer 49**: This deposit is a gray soil with a moderate amount of ash, burned soil, charcoal and bone, with a small amount of mud brick and stone. It sits on the original half-basement floor of the room. Thickness: ca. 40 cm, sloping slightly down from east to west.

**Provisional layer 48**: This hard deposit is a gray ashy soil with a small amount of ash, charcoal and stone but a medium amount of bone. It fills the half-basement area of R59 to the top of the benches. The top of the deposit became a surface for the second use of the room. Thickness: ca. 46 cm, sloping slightly down from east to west. A painted round-mouthed jug was found in front of W144 (YH130194).

**Provisional layer 47**: This deposit is a soft greyish brown soil with a medium amount of ash, charcoal and stone, and a high amount of bone. Thickness: ca. 11 cm, sloping slightly down from east to west.

**Pottery finds for R59 (PL 47, 48, 49 combined)**: 18 painted and 96 plain MIA sherds.

**Provisional layer 34**: This deposit is a soft greyish ashy soil with a high amount of ash, charcoal and bone. Thickness: ca. 61 cm, sloping slightly down from east to west.

**Pottery finds for R59 (PL 34)**: 40 painted and 147 plain MIA sherds.

### 2.8.2 Phase I-10

#### 2.8.2.1 R(oom)65, E8/d8 (Fig. 5-6)

Only a small area of R65 is contained in the excavation area. The room is represented by its bench part, and is bordered by west wall W170. The room cuts into the MIA room R59 (I-11). One deposit was excavated in the room as PL 37. A hard white floor was found at the base of PL 37. The room is cut into by the MIA pits P74 and P87 (I-9/I-10) on the north, the probably MIA pits P111 on the east and the P106, and the LIA pit P73 on the west.

**Provisional layer 37**: It is a soft yellow brownish soil with a moderate amount of ash, mud brick and small amount of bone. It sits on the floor of the bench which was built inside the room. Thickness: ca. 34 cm.

**Pottery finds for R65:** 8 painted and 16 plain sherds dated to the MIA.

### 2.8.3 Phase I-9/I-10

#### 2.8.3.1 P(it)74, E8/d8 (Fig. 5-6)

This pit cuts the MIA pit P87 (I-9/I-10) and the MIA room R65 (I-10). One deposit was identified in this pit, and excavated as PL 19. Its floor was not well-preserved. Thickness: ca. 98 cm, sloping down from north to south.

**Provisional layer 19**: This deposit is a soft dark ashy soil with a small amount of charcoal, mud brick and bone.

**Pottery finds for P74**: 4 painted and 6 plain sherds dated to the MIA.

#### 2.8.3.2 P(it)87, E8/d8 (Fig. 5-6)

It cuts the MIA room R65 (I-10). It is cut into by the MIA pit P74 (I-9/I-10). One deposit was excavated in the pit as PL 28. A white floor was found at the base of PL 28.

**Provisional layer 28**: It includes soft greyish ashy soil with a high amount of ash, a small amount of charcoal, stone and bone. It overlies the floor of R87. Thickness: ca. 149 cm.

**Pottery finds for P87**: 14 painted and 62 plain sherds dated to the MIA.

#### 2.8.3.3 P(it)78, E8/d8

This pit cuts a yellowish deposit which is contemporary with the MIA room R65 (I-10). Two deposits were identified in the pit as PL 25 and PL 63. Its later surface was found at the base of PL 25 and original bottom was found at the base of PL 63.

**Provisional layer 25**: The first deposit is a soft brownish ashy soil with a small amount of ash and bone. It overlies the later surface of P78. Thickness: ca. 62 cm

**Provisional layer 63**: The second deposit is a soft ashy soil with a small amount of ash, burned soil and bone. It overlies the original bottom of P78.

**Pottery finds for P78** (PL 25 & 63 combined): 4 painted and 31 plain sherds dated to the MIA.

### 2.8.4 Phase I-9

#### 2.8.4.1 P(it)41, E8/d9 (Fig. 5-6)

This pit cuts the MIA room R33 (I-11). The pit also cuts into the underlying Stratum III (Early Bronze Age). One deposit was excavated in the pit as PL 34. A light white surface was found at the base of PL 34.

**Provisional layer 34**: This deposit is a soft grey ashy soil with a high content of burned soil and a small amount of bone. Thickness: ca. 65 cm, sloping down from east to west.

**Pottery finds for P41:** 15 painted and 62 plain sherds dated to the MIA.

#### 2.8.4.2 P(it)34, E8/f10 (Fig. 5)

This pit cuts a burned mud brick wall from Stratum III (Early Bronze Age). It is also cut by the LIA rooms R29 and R24. Three different deposits were identified in this pit, and excavated as PL 60 (latest), 61 and 62 (earliest).

**Provisional layer 60**: This deposit is a grey ashy soil with a moderate amount of charcoal and bone. Thickness: ca. 43 cm, sloping down from northeast and south into the middle.

**Provisional layer 61**: This deposit, from the north-western part of the pit, has a distinct, yellowish brown soil. It includes a small amount of ash, charcoal, stone and bone. Thickness: ca. 30 cm.

**Provisional layer 62:** This final deposit has a grey ashy soil, and resembles PL 60. It includes a high ash content and moderate amount of charcoal and bone. Thickness: ca. 41 cm, sloping down from northeast into the middle.

**Pottery finds for P34 (PL 60, 61, 62 combined)**: 57 painted and 74 plain MIA sherds.

# CHAPTER 3

# THE ANALYSIS OF THE YASSIHÖYÜK MIA POTTERY GROUP

## 3.1 Methodology

### 3.1.1 The YH MIA Deposits

In this section, the steps to define the pottery group for this thesis will be explained. This material was selected as the YH MIA pottery group in 2015. The relevant deposits excavated by the 2015 season were initially identified by the excavation team. Pottery collected from those deposits had already been separated, labelled and stored in JIAA (Kaman, Kırşehir). Sherds collected from deposits of similar date excavated after this season are not included in this thesis.

### 3.1.2 The Context of the YH MIA Deposits

My first aim was to distinguish the possible periods for this pottery group which was in fact mixed. In other words, I first separated out from the sample the intrusive, primarily Bronze Age sherds since the Bronze Age levels occur immediately below the MIA features in the excavation area. Especially in the pits, it is inevitable to encounter a mixed content of pottery sherds from the Bronze Age to the Late Iron Age. The MIA rooms were interrupted by pits, as seen in the plans (Fig.5-6). The second step, therefore, was to separate the MIA sherds from earlier and later Iron Age types. This process was facilitated by K. Matsumura's Ph.D. thesis (2005) on

the Iron Age pottery of Kaman-Kalehöyük, and other studies of Bronze Age and Iron Age pottery from the important sites in Central Anatolia (Parzinger (1992), Sams (1994), Dupré (1984) and Bossert (2000)).

### 3.1.3 The Thesis Samples

This typology focuses only on rim sherds, excluding body sherds, bases or handles because of the limitation on pages and time for an MA thesis. This third filter decreased the number of vessels to be studied to a manageable group. On their basis, I have made quantitative assessments of significant ratios such as decorated to plain vessels; and the frequency of vessel types. Table 2 shows the results.

### 3.1.4 The Catalogue Samples

Once this initial process was completed (the period and the separation of rim parts), the final step was to determine which sherds to choose for the catalogue. The main concern was here to choose a representative selection by including only those sherds that are sufficiently preserved to be informative. The catalogue included here consists of 456 examples, all of which are illustrated with drawings and photographs. These represent 70% of the total MIA sample.

## 3.2 Typology

### 3.2.1 Introduction

In this section, I will mention how many main groups and sub-groups are categorized on the basis of which criteria. It will conclude with the 5 major ware types that have been identified for this ceramic assemblage. This section therefore will present ‘guidelines’ for the catalogue of the thesis.

A second characteristic of the assemblage that needs to be considered is manufacturing technique. Most of the samples seem to have been formed by coiling technique although the surface treatment, when applied with pressure, might give that impression on some samples. The traces of this technique are found mostly on

bowls and cooking pots. When the wall of the samples is examined carefully, bumps and junctures could be observed. On some bowls with burnished surface, burnishing marks on the coil parts become darker than on the junctures. It thus causes a rough surface on vessels that share two finishing and manufacturing techniques.

### 3.2.2 Main Classes

This typology recognizes four main analytical groups: *(1) form*, *(2) fabric and firing techniques*, *(3) surface treatment* and *(4) decoration* (Fig. 8). To describe them briefly, *Group (1) Form* demonstrates the range of different vessel shapes in the assemblage like open vessels (bowls, jugs) and closed vessels (cooking pots, jugs, kraters and pithoi). *Group (2) Fabric and Firing Techniques* indicates the fabric-related attributes of the samples (the type, size and density of inclusions in fabric) and the core color with reference to the firing technique. *Group (3) Surface Treatment* describes the types of finishing processes like slip, smoothing or burnishing. *Group (4) Decoration* indicates the range of motifs on painted samples in the assemblage. All these main classes with their main and sub-groups will be explained in detail below.

#### 3.2.2.1 Form

In this group, a first categorization is based on whether the sample is an open or closed vessel, by comparing the dimensions of rim and body (Fig. 9): **open vessels** (having rim wider than body) and **closed vessels** (rim is narrower than the height of the body). The **open vessels** include two different forms: **bowls** (shallow body without neck) and **jugs with round mouth** (deep body with neck).

The **closed vessels** are grouped into two sets: the samples with neck and the samples without neck. As seen in Fig. 9, the closed vessels with neck are separated into two groups according to the width of the neck (narrow or wide) as well as the rim form (pinched or round). The samples with narrow neck and pinched mouth are identified as **jugs with pinched mouth**. The closed deep vessels with round mouth are defined as **kraters**. However, the samples with narrow neck but round mouth are also included under this krater category because of their rim form. On the other side, the closed vessels without neck are divided into two groups according to their estimated

body size, based on the wall thickness. The samples with shallow body and thin wall are grouped under **cooking pots**. Most of the samples here had secondary fire traces. It might show the way they were used, such as for cooking. The vessels without neck but having thicker wall and deep body are categorized under **pithoi**. All form groups have their own sub-categorization. Their stance and rim variations are two main criteria for this sub-categorization.

#### 3.2.2.1.1 Open Vessels

##### 3.2.2.1.1.1 Bowls

There are two separate groups here according to rim form: (1) the bowls with plain rim and (2) the bowls with flaring rim (Fig. 9). For the **bowls with plain rim**, 9 different rim forms have been identified, from plain rims (flat and rounded) to thickened rims (pointed to rounded) (Fig. 10): BP1-9.[2]

For the **bowls with flaring rim**, the samples were placed on a scale with two variables (Fig. 11):
x-axis on scale: distance from the point where rim is shaped to the top of vessel
y-axis on scale: distance from the point where body is shaped to the top of vessel
This scale measures a span from the deepest sample to the shallowest one. As seen in Fig. 12, the bowls with carinated profile or S-shaped profile have similar inclination and similar depth of body. Those having a similar profile fall into one group; hence, 5 different groups are formed: BF1-5[3].

##### 3.2.2.1.1.2 Jugs with Round Mouth

There are two main criteria for the categorization of this type of jug. The first one is based on the angle of the neck, from the straight to the everted neck (Fig. 13): RJ1 (straight), RJ2 and RJ3 (divergent)[4].
The second criterion is the rim form: (a) rounded, (b) quadrangular, (c) elongated or (d) both quadrangular and elongated. For instance, if a jug with round mouth falls into the form group RJ1, it has a straight neck with rounded rim:

[2] BP: **B**owl with **P**lain Rim
[3] BF: **B**owl with **F**laring Rim
[4] RJ: **R**ound-Mouthed **J**ug

RJ1a: RJ**1** (straight neck) – **a** (with rounded rim)

#### 3.2.2.1.2 Closed Vessels

The similar categorization system above is applied to all separate forms here. The first criterion is the vessel profile, from straight to excurving or incurving. The second criterion is the rim form, organized from rounded to elongated (Fig. 14).

### 3.2.2.2 Fabric and Firing Technique

Almost all sherds in the assemblage share four different types of inclusion in their fabric: chaff, lime, mica and other grits. Differentiating their fabrics depends on determining the composition of the inclusions. To do this, the fabric could be described with 3 attributes (Fig. 15): **type of inclusion** (grit (G), lime (L), chaff (C), mica (M)), its **density** (heavy (H), medium (M), few (F)) and its **size** (coarse (C), medium (M), fine (F)).

A second criterion considered here is firing technique, based on **core color**. It gives clues to the firing process: a grey core indicating reduction or orange core showing oxidation in the kiln. Cores occur in three main colors: grey (G), orange (O) and black (B). My aim is to determine whether different firing atmospheres were applied to similar fabric types. Therefore, attributes related to firing technique and fabric are combined in this category.

### 3.2.2.3 Surface Treatment

In the assemblage, different surface treatments from plain finishing to polishing are observed. However, rough burnishing and plain smoothing seem the most common. Surface treatments in the assemblage are classed as follows (Fig. 16): first, whether the surface was **slipped or not**; second, whether any surface treatment was applied or, simply **smoothed;** third, whether the surface was roughly **burnished** or even carefully **polished**.

### 3.2.2.4 Decoration

A wide range of motifs is observed in the assemblage. As seen in Fig. 8, a first categorization divides the decoration into **simple motif** elements or **composite**

**patterns** combining simple motifs. The simple motifs are then defined as **straight lines** or **curved lines**. In the other group, the composite motifs enable the painter to fill a space or leave it plain. The third categorization under composite motifs shows the different **types of filling**: lines, dot pattern, net pattern or solid.

### 3.3 Correlations

Once all the main groups and sub-groups were established according to the typology, the main types for each form were determined by correlating the main groups in the typology. I initially reviewed all attributes under one form group and observed that each group sorted itself according to surface color (Red/Reddish Brown Ware, Pale Reddish Ware, Cream Ware and Grey/Black Ware). Surface is therefore the first criterion. Other attributes like surface treatment or firing technique-fabric determined a second criterion within the main type. For instance, cream wares show a marked difference based on their core color: the cream samples with grey core and the samples with orange core. At this point, the color of core is determined as second criterion to distinguish the sub-types under cream ware. The second criterion, thus, might show variety for different main types. Each form has its own main types.[5] These main types are explained below.

#### 3.3.1 Open Vessels

##### 3.3.1.1 Bowls with Plain Rim

In this form, five main types are determined according to their surface color: Red/Reddish Brown Bowls (B1), Pale Reddish Bowls (B2), Cream Bowls with Grey Core (B3), Cream Bowls with Orange Core (B4) and Grey/Black Bowls with Plain Rim (B5) (Fig. 17).

###### 3.3.1.1.1 Red/Reddish Brown Bowls with Plain Rim (B1)

**Form:** This type of bowl covers forms BP1 to BP9, but mostly occurs BP2, BP3, BP5 and BP6 (Fig. 51).

**Fabric & Firing Technique:** Almost all samples have a grey core, especially a dark

[5] For the list of abbreviations for ware types according to vessel forms, see Table 3.

greyish core. It results from a dominant reduction technique, in which the atmosphere of the kiln lacks oxygen (Velde & Druc, 1999: 122-123).
This type of ware has a fabric which contains a medium to heavy amount of chaff, lime and grit in different sizes as well as a high amount of mica.
Chaff is generally medium to fine size. In some sherds, some coarse chaff occur on the interior surface, which is mostly smoothed. Some coarse chaff also occur on the exterior surface. Lime is medium to fine size. The density of lime in medium-size particles ranges from medium to rare, whereas the fine lime particles occur much more densely. These fine lime specks are distributed evenly in many examples. However, the medium lime particles are distributed randomly. Some of the lime particles break through the surface of the vessel. All samples have a high amount of mica.
**Surface Treatment:** The majority has a burnished exterior surface and smoothed interior surface, although a few bowls are just smoothed (YH130347, Fig. 58). However, the smoothed samples have a shiny surface because of the high mica content. Velde explains that the smoothing process makes the surface glossy by concentrating the particles on the surface (Velde & Druc, 1999: 86).
**Decoration:** Less than one quarter of the group is decorated, mainly on their rim. The common motif is straight lines in different directions (horizontal, vertical or diagonal lines). Some samples have a different motif on the rim like a herringbone (YH130519, Fig. 65; YH130531, Fig. 74; YH130654, Fig. 58).
Line motifs are generally painted on the rims. The space between two vertical lines is filled in some samples (YH130518, YH130525, Fig. 58). One example (YH130653, Fig. 69) has its rim decorated with long diagonal lines framed on top and base. Paint colors are brownish and black. In some examples (YH130578, Fig. 74; YH130527, Fig. 58) a greyish or whitish color was chosen instead.
**Deposits:** All

#### 3.3.1.1.2 Pale Reddish Bowls with Plain Rim (B2)

**Form:** The common forms for this type are BP2, BP5 and BP7 (Fig. 51). One example has a handle broken off (YH140218, Fig. 58).
**Fabric & Firing Technique:** This bowl type is distinguished by layered surface color: a thin layer in pale reddish on the surface covering the brighter red layer beneath it. Rice associates this thin upper layer with the salt and gypsum in the clay

(1987: 282), which move to the surface during the drying process while water evaporates. These salt particles then leave a layer on the surface after the firing process, giving the impression of a white slip (Rice, 1987: 282). This type of surface deposit is identified as "scum" (Rice, 1987: 282; Velde 1999: 142; Ökse, 2011: 54,). Matson gives a similar explanation about this pale reddish thin layer (1943: 87-88). He underlines the contribution of the salt in the fabric, which dominates over the iron during the volatilization (1943: 87-88). However, he considers that the temperature must have not been higher than 900°C; this yellowish thin surface would be formed during the cooling process, giving an impression of slip (Matson, 1943: 87-88).
On the other hand, some samples from this group show the same pale reddish layer due to the effect of mica on the surface. Almost all sherds in this assemblage have a high mica content. They also contain high to medium amounts of lime specks in medium to fine size. Coarse lime particles occasionally break through the surface (YH130394, Fig. 82; YH130314, YH130452, Fig. 65), where pores or cracks may occur during the firing process when the coarse particles expand (Velde & Druc, 1999: 143-144). Finally, this type has a moderate amount of chaff and grit, but less than in the B1 bowl fabric.
**Surface Treatment:** Most bowls have a burnished exterior surface. However, the proportion of burnishing on both inner and outer surface is higher than in B1.
**Decoration:** Only 2 painted examples belong to this group. Their motifs are like the B1 bowls: a sequence of vertical lines on the rim (YH130688, Fig. 74; YH140218 Fig. 58).
**Deposits:** R59

#### 3.3.1.1.3 Cream Bowls with Plain Rim and Grey Core (B3)

**Form:** The forms in this type are BP2, BP4, BP8 and BP1 (Fig. 51) in a descending order of frequency.
**Fabric & Firing Technique:** The B3 fabric has a higher amount of lime inclusions than B1. Coarse lime specks increase slightly compared to B1, and are visible on the surface. The fabric includes the range between medium to fine lime specks in medium to rare densities. The paste also contains a small amount of fine grits. Bowls from P34 contain a balanced amount of grit and lime (YH110544, YH110545, Fig. 82). The B3 bowl fabric also contains a moderate amount of chaff like B2. The B3 bowls have a grey core which points to the reduction technique during the firing

process. Matsumura (2000) categorizes the Iron Age ceramics according to their manufacturing techniques. He separates cream wares into four main groups (2000: 124). The B3 bowl type belongs to his 4th group of Iron Age cream ware: 'Cream ware with pale grey colored core and with a thin layer of red color beneath the cream surface' (2000: 124-125).

**Surface Treatment:** Like B1 and B2, the exterior surface of B3 bowls is mainly burnished while the interior surface is left smoothed, although some examples have both only smoothed (YH140226, Fig. 52; YH130383, Fig. 55). One exceptional example from P34 has a cream-slipped surface (YH110544, Fig. 52). That is slightly thicker than examples from other deposits. It also has a similar amount of grits and lime inclusions (see above).

**Decoration:** Most of the examples from this group are not painted. Exceptions are two from P34 which have painted vertical lines on their rims (YH110545, YH110539, Fig. 82). One more example has a space with solid fill between vertical lines on its rim (YH130370, Fig. 65). The previously mentioned piece with slip and grit (YH110544, Fig. 82) has concentric bows framed by vertical lines in black. This example is similar to the bowls with flaring rim from P34 and has a cream slip. However, it includes more grits and a darker grey core.

**Deposits:** R59 (34, 48), P34 (in descending order of frequency)

#### 3.3.1.1.4 Cream Bowls with Plain and Orange Core (B4)

**Form:** The number of the examples from this group is small in comparison to B3. The common forms in this type are BP7 and BP8 (Fig. 51).

**Fabric & Firing Technique:** Fine-sized lime occurs in high to medium amounts, medium-sized lime particles are rarely seen at B4 bowls. This slight decrease is also observed for big lime specks, rarely breaking the surface. Chaff size also becomes finer, and decreases dramatically in amount compared to B2 and B3. The fabric contains a medium to high amount of fine grits.

**Surface Treatment:** Like types B1, B2 and B3, B4 bowls have a burnished exterior surface and smoothed interior surface. This group would fit Matsumura's 1st group: 'Cream ware with cream colored core' (2000: 124). He underscores the low number of this type from Kaman-Kalehöyük, as is also the case in our assemblage. He also indicates that the frequency of this ware is much higher in the 2nd mill. BC levels at Kaman-Kalehöyük (2000: 214). According to Rice, this kind of pottery is oxidized

without any organic temper or iron (Rice, 1987: 345). It suggests that the B4 group is distinguished from groups B1, B2, B3 and B5 in terms of firing technique.
One example (YH130329, Fig. 82) from B4 shows the features similar with 'gold wash ware' from the 1st mill. BC Kaman-Kalehöyük (Matsumura, 2000: 123). The impression of gold wash is caused by a "micaceous wash" on the surface and oxidation (Matsumura, 2000: 124).
**Decoration:** Some painted samples have a sequence of vertical lines on the rim (YH130584, Fig. 69; YH130585, Fig. 78). One example has a filled area between those vertical lines (YH130583, Fig. 69).
**Deposits:** R59 (48, 34), P78 (in descending order of frequency)

**3.3.1.1.5 Grey/Black Bowls with Plain Rim (B5)**
**Form:** Although the number of the bowls from this group is very low compared to other groups, it shows variety in form. The majority of examples belong to form BP9.
**Fabric & Firing Technique:** The common feature for B5 is a medium to high amount of fine grits. Some examples, especially grey ones, contain fine to medium amounts of fine chaff in their fabric (YH130455, YH130462, Fig. 88). In contrast, the black burnished examples (YH130415, YH130424, YH130446, YH130497, Fig. 88) have few fine grits. Matsumura states that this kind of wares must have been fired under the reduction conditions in the kiln because they have a grey/black core (2000: 122). The other two grey bowls (YH130455, YH130462, Fig. 88) also have a grey core and similar firing. Two black bowls have a micaceous surface and grey core (YH130322, YH130500, Fig. 88). Because of their grey core, they must have been fired under the reduction conditions. Like other types, all examples have a high mica content.
**Surface Treatment:** The surface treatment on B5 bowls shows variety. Most of them are black polished bowls (YH130415, YH130424, YH130446, YH130497, Fig. 88). These examples could fit into Matsumura's group of fine black burnished ware (2000: 122). Their surfaces are well-burnished, even polished, although some are just smoothed and grey (YH130455, YH130462, Fig. 88). Two others have a burnished surface with "mica wash" (YH130322, YH130500, Fig. 88), like "gold wash" mentioned for type B4 (YH130329). This "mica wash" gives these bowls a lustrous surface. Matsumura calls this type of wares "Plumbeous Ware", a "Gray ware with a

glossy surface" because of this "mica wash" (2000: 123). This type is also known from Gordion (Young et al., 1981: 47).

**Decoration:** No examples are painted.

**Deposits:** R59 (34, 48), P74 (in descending order of frequency)

#### 3.3.1.2 Bowls with Flaring Rim

This form occurs in five main types: Red/Reddish Brown Bowls (F1), Pale Reddish Bowls (F2), Cream Bowls with Grey Core (F3), Cream Bowls with Orange Core (F4) and Grey/Black Bowls with Flaring Rim (F5) (Fig. 18).

##### 3.3.1.2.1 Red/Reddish Brown Bowls with Flaring Rim (F1)

**Form:** The common forms for this type of bowls are BF1, BF2, and BF3 (Fig. 92).

**Fabric & Firing Technique:** The fabric of F1 is almost the same as B1. The same paste must have been used for these two different bowl forms. These two groups have the similar high amount of chaff in fine to medium size as well as a moderate amount of lime and grits in fine to medium size. In contrast, the examples from P34 have denser grits in fine-to-medium size than from other deposits.

The majority of examples have a high amount of mica specks, visible on both their inner and outer surface. All samples have grey cores, from reduced firing.

**Surface Treatment:** The number of bowls with both surfaces burnished, is higher than B1 (YH110543, Fig. 94; YH130496, Fig. 93). The F1 bowls have a wide flaring mouth. The inner surface becomes more visible than the outer surface. The potter might have preferred to put effort on the visible surface of the vessel. This would be an explanation for the increase in the number of examples with a burnished interior surface. Some examples even have a burnished inner surface but their outer surface is left smoothed (YH110598, YH110599, Fig. 98). One exceptional example has a cream slip partly on its rim (YH110586, Fig. 97).

**Decoration:** Like B1, less than one quarter of F1 is decorated, mainly on their flaring rim. The most common motif is the sequence of vertical lines. Some examples have an additional horizontal line framing this sequence of vertical lines (YH110542, Fig. 95). Some examples are decorated with different motifs. One example (YH130591, Fig. 93) has a composite decoration. The cross within circles and a wavy line framed by two horizontal parallel lines are painted on its exterior

surface. Another example (YH130652, Fig. 93) has the diagonal lines framed by a horizontal line painted on its exterior surface.

**Deposits:** R59 (48, 34, 49), P34, P78, P41, R65, P87 (in descending order of frequency)

#### 3.3.1.2.2 Pale Reddish Bowls with Flaring Rim (F2)

**Form:** There are just three examples in this type. They are from BF2 (YH130586, YH130587, Fig. 94-95) and BF3 (110618).

**Fabric & Firing Technique:** The common feature for all examples is to include lime particles in coarse to medium size which break through their surfaces. All of them also contain a moderate amount of grit and chaff in fine to medium size as well as a high content of mica.[6] Two examples (YH130586, Fig. 94; YH110618, Fig. 97) have a grey core. On the contrary, one example (YH130587, Fig. 95) has an orange core.

**Surface Treatment:** All examples have both surfaces smoothed.

**Decoration:** YH130586 (Fig. 94) and YH130587 (Fig. 95) are decorated with framed vertical lines framed on the top of the flaring rim.

**Deposits:** R59 (34), P34 (in descending order of frequency)

#### 3.3.1.2.3 Cream Bowls with Flaring Rim and Grey Core (F3)

**Form:** The common forms for this type are BF2 and BF3 (Fig. 92).

**Fabric & Firing Technique:** The F3 bowls have a similar fabric to the B3 bowls. The bowls include the moderate amount of chaff. Fine lime particles increase compared to F1. The medium lime specks are more distinguishable than the F1 bowl fabric. All F3 bowls have a pale grey or grey core, resulted from reduced firing. This type of F3 cream bowls would fit Matsumura's 4th group: "Cream ware with pale gray colored core with a thin layer of red color beneath the cream surface" (2000: 124-125). He points to both reduction firing for the pale grey core and oxidation firing for the thin red layer (2000: 124-125).

**Surface Treatment:** Some examples have a cream layer over all their surface (YH130491, Fig. 93; YH130592, Fig. 95). This overall cream surface could result from their calcareous paste (Matsumura, 2000: 125). Most of the F3 bowls have a

[6] Detailed information has been mentioned in section B2.

burnished inner surface, rarely a burnished outer surface like F1. In contrast, some examples (YH130429, YH130590, Fig. 94) are cream-slipped, especially until their carination. However, one example with cream slip wash is polished (YH110640, Fig. 93).

**Decoration:** The common motif is the sequence of vertical lines or diagonal lines on the flaring rim (YH130589, YH130590, Fig. 94). Some examples have additionally a horizontal line framing this sequence of diagonal lines (YH130592, Fig. 95).

**Deposits:** R59 (34, 48) (in descending order of frequency)

#### 3.3.1.2.4 Cream Bowls with Flaring Rim and Orange Core (F4)

**Form:** The common forms are BF2 and BF3 (Fig. 92).

**Fabric & Firing Technique:** The F4 fabric is similar to the F3 fabric except for the decrease in the amount of chaff. The fine chaff inclusions are few in F4. However, both two groups have medium lime particles in small amount. They also include fine lime specks in medium-to-high amount. The F4 bowls contain a balanced amount of fine grits and lime particles. However, the examples from P34 include more medium-sized grits than from other deposits. This difference was already seen in the F3 type. The examples from P34 also have a red core rather than an orange core. These examples have a thin layer of cream slip (YH130553, YH130554, Fig. 96). This type of cream bowls hence could fit Matsumura's 2nd group: "Cream slip ware with red colored core" (2000: 124). He points to oxidation firing for the red core (2000: 124). All except these examples show the similarity with Matsumura's 1st group: "Cream ware with cream colored core", resulted from oxidation firing (2000: 124). Like other types, all the F4 bowls have a high mica content.

**Surface Treatment:** Most of the F4 bowls are cream-slipped. Some examples have cream slip overall their surface. The bowls from P34 (YH110553, YH110554, Fig. 96) have a thicker slip than from other deposits. Other cream bowls have just a cream surface but no slip (YH130588, Fig. 96).

**Decoration:** The motifs in the type F4 show variety unlike F1, F2 and F3, although the common motif is still the sequence of vertical lines. Wavy lines in different styles (YH110551, Fig. 96), concentric bows (YH110552, Fig. 96), the series of meanders (YH130553, Fig. 96) and a net pattern framed by parallel vertical lines (YH130588, Fig. 96) are painted on the flaring rim.

**Deposits:** R59 (34, 48), P34, R65 (in descending order of frequency)

#### 3.3.1.2.5 Grey/Black Bowls with Flaring Rim (F5)

**Form:** The common form seen in this type is BF4.

**Fabric & Firing Technique:** The fabric of type F5 is similar with the paste of type B5. The F5 bowls must have been fired under the reduction conditions because of their grey/black core.

**Surface Treatment:** All examples are polished. The sample from R59 (YH130397, Fig. 96) is more carefully polished than the bowls from P41 (YH110199, YH110510, Fig. 98).

**Decoration:** No examples are painted.

**Deposits:** P41, R59 (34) (in descending order of frequency)

### 3.3.1.3 Jugs with Round Mouth

This form occurs in five main types: Red/Reddish Brown Jugs (R1), Pale Reddish Jugs (R2), Cream Jugs with Grey Core (R3), Cream Jugs with Orange Core (R4) and Grey/Black Jugs (R5) (Fig. 19).

#### 3.3.1.3.1 Red/Reddish Brown Round-Mouthed Jugs (R1)

**Form:** The common forms for this type of jugs are RJ2 and RJ3 (Fig. 102).

**Fabric & Firing Technique:** The R1 fabric becomes finer compared to other types of open and closed vessels. The amount of medium-size temper decreases dramatically, although the paste still has the moderate amount of fine inclusions: chaff, lime, grit and mica. For instance, the chaff tempers are visible on the surface of some examples (YH110222, Fig. 104; YH130483, Fig. 103). All samples have a high amount of mica. A group of examples have an orange core (YH130594, Fig. 103; YH140219, Fig. 104), resulted from oxidation firing. However, other examples have a pale grey core (YH130459, YH130483, YH130593, Fig. 103). One example (YH130649, Fig. 106) has a dark grey core. The R1 jugs show variety in their firing.

**Surface Treatment:** The number of examples which have both surfaces burnished, is high compared to the red/ reddish brown bowl forms: B1 and F1. Some examples have rough burnish marks (YH130459, YH130594, Fig. 103). One example from P41 (YH110271, Fig. 103) is red slipped and burnished.

**Decorations:** The common motif is the net pattern painted on neck and/or body. One almost complete example from R59 (YH130194, Fig. 104) has a net pattern

decorated on the mouth and upper body. Some examples (YH130593, Fig. 103; YH130648, Fig. 104) have the similar net pattern on the mouth. Two examples (YH130594, Fig. 103; YH130649, Fig. 106) have bows framed by a horizontal line. One red-slip example (YH110271, Fig. 103) has diagonal lines framed by parallel horizontal lines.

**Deposits:** R59 (48, 34, 47), P41 (in descending order of frequency)

#### 3.3.1.3.2 Pale Reddish Round-Mouthed Jugs (R2)

**Form:** The common form for this type of jugs is RJ2.

**Fabric & Firing Technique:** Like R1 fabric, the paste becomes finer. However, it still includes medium-size lime specks in the clay. They have a high content of mica as well as fine-size grit in small amount. All have a thin pale reddish layer covering their outer surface.[7]

**Surface Treatment:** All examples here have the outer surface burnished but inner surface smoothed (YH130597, Fig. 19; YH130637).

**Decoration:** As seen in R1 jugs, the common motif is the net pattern painted on neck and/or body (YH130648, Fig. 104; YH130597). However, one example (YH130650, Fig. 105) has a sequence of ray motifs in addition to the net pattern on the neck.

**Deposits:** R59 (34, 48, 47) (in descending order of frequency)

#### 3.3.1.3.3 Cream Round-Mouthed Jugs with Grey Core (R3)

**Form:** The common forms for this type of jugs are RJ1, RJ2 and RJ3.

**Fabric & Firing Technique:** The R3 fabric becomes finer compared to other types of open and closed vessels, like R1 and R2. The paste still contains all fine-sized inclusion types in small amount. Only one example from P41 (YH110266, Fig. 106) still has a texture with medium quality. It includes a moderate amount of grit and chaff in fine to medium size. All examples have a pale grey core (YH130593, Fig. 103; YH130659, Fig. 104; YH110266, Fig.106). These examples would fit Matsumura's 4th group: "Cream ware with pale gray colored core with a thin layer of red color beneath the cream surface" (2000: 124-125). He points to both reduction firing for the pale grey core and oxidation firing for the thin red layer (2000: 124-

[7] Detailed information about this thin layer has been mentioned in section B2 and F2.

125).

**Surface Treatment:** Some R3 jugs (YH130659, Fig. 104; YH110266, Fig. 106) have only the outer surface burnished. Some examples (YH130593, Fig. 103) are just smoothed on both sides.

**Decoration:** The common motifs are the net pattern (YH130593, Fig. 103; YH130659, Fig. 104). A wavy line could be observed as an additional motif on YH130659 as well as the net pattern on the neck. At this point, YH110266 takes a special attention with its composite decoration: a sequence of rectangles with solid fill, a herringbone, a sequence of lozenges with solid fill consecutively. This example is different from other sherds in decoration and fabric in this group. This difference thus strengthens the possibility that it might have been imported.

**Deposits:** R59 (34, 48), P41

#### 3.3.1.3.4 Cream Round-Mouthed Jugs with Orange Core (R4)

**Form:** The common forms for this type of jugs are RJ1, RJ2, RJ3 (Fig. 102).

**Fabric & Firing Technique:** The R4 fabric becomes finer compared to other types of open and closed vessels, like R1, R2 and R3. The amount of medium-size temper decreases dramatically, although the paste still has the moderate amount of fine inclusions: chaff, lime, grit and mica. For instance, the lime inclusions, even rare medium particles, are visible on the surface of some examples (YH130528, Fig. 103). R4 jugs have an orange core (YH130470, YH130528, YH130533, Fig. 103), resulted from oxidation firing. All samples have a high amount of mica.

**Surface Treatment:** Some cream R4 jugs, especially from R59 and P87, are cream-slipped (YH130470, YH130528, YH130533, Fig. 103). Some examples, especially from P41, are just cream ware with orange core (YH110519, Fig. 106). This type of cream ware would fit Matsumura's 1st group: 'Cream ware with cream colored core' (2000: 124), as is also the case in B4.

**Decoration:** The common motifs are the net pattern (YH130528, YH130533, Fig. 103) and a sequence of diagonal lines (YH130528).

**Deposits:** R59 (48, 34, 47), P41, P34 (in descending order of frequency)

### 3.3.2 Closed Vessels

#### 3.3.2.1 Jugs with Pinched Mouth

This form occurs in five main types: Red/Reddish Brown Jugs (P1), Pale Reddish Jugs (P2), Cream Jugs with Grey Core (P3), Cream Jugs with Orange Core (P4) and Grey/Black Jugs (P5) (Fig. 20).

##### 3.3.2.1.1 Red/Reddish Brown Pinched-Mouthed Jugs (P1)

**Form:** The common forms for this type of jugs are PJ1, PJ2, PJ3, and PJ4 (Fig. 110).
**Fabric & Firing Technique:** The P1 fabric has a similar texture with similar inclusions to fabric B1 and F1. Chaff is generally medium to fine size. The paste has a moderate amount of chaff. Lime is medium to fine size. The density of lime in medium-size ranges from medium to rare, whereas the fine lime particles occur much more densely. All samples have a high amount of mica. The P1 jugs have a grey core. Some examples have a dark grey core (YH130485, Fig. 111).
**Surface Treatment:** All P1 jugs have both inner and outer surfaces smoothed.
**Decoration:** No examples are painted.
**Deposits:** R59 (48, 34), P78, P87, P41 (in descending order of frequency)

##### 3.3.1.3.5 Black/Grey Round-Mouthed Jugs (R5)

**Form:** The common forms for this type of jugs are RJ2 and RJ3 (Fig. 102).
**Fabric & Firing Technique:** The R5 fabric becomes finer compared to other types of open and closed vessels, like R1, R2, R3 and R4. However, it has a higher amount of fine grits than the other jug fabrics. The two examples (YH110219 and YH110521) have a dark grey core, pointing to the reduction firing. Both examples have a high amount of mica.
**Surface Treatment:** Both examples are polished. One of them (YH110219) is more carefully polished than the other jug (YH110521, Fig. 106).
**Decoration:** No examples are painted.
**Deposits:** P41

##### 3.3.2.1.2 Pale Reddish Pinched-Mouthed Jugs (P2)

**Form:** The common forms of 3 jugs in this type are PJ1, PJ2, and PJ3 (Fig. 110).
**Fabric & Firing Technique:** The P2 fabric has a similar texture with similar

inclusions to fabric P1 above. The only difference between the textures of P1 and P2 is the slight increase in the amount of medium-size lime particles. All samples have a high amount of mica. One P2 jug has a grey core (YH130327, Fig. 111). One of them has a dark grey core (YH130546, Fig. 111). The other example has an orange core (YH110649, Fig. 112). This variety in core color challenges the effect of firing condition on the form of scum. The reason behind 'scum' or this pale reddish thin layer would thus be related to the paste context.

**Surface Treatment:** All P2 jugs have both inner and outer surfaces smoothed.

**Decoration:** No examples are painted.

**Deposits:** P78, P87, P34

#### 3.3.2.1.3 Cream Pinched-Mouthed Jugs with Grey Core (P3)

**Form:** The common forms for this type of jugs are PJ1, PJ2 and PJ3.

**Fabric & Firing Technique:** The P3 fabric has a similar fabric with P1 and P2 with the similar amount of inclusion in similar size. They still have medium size lime particles intruding onto the surface. Only one example from P34 (YH110589, Fig. 112) has a higher amount of grit than other examples here. This example has a moderate amount of grit in medium to coarse size. All examples have a grey core. Most of them have a pale grey core enclosed in a thin pale red layer under cream surface. These examples fit Matsumura's 4th group: "Cream ware with pale gray colored core with a thin layer of red color beneath the cream surface" (2000: 124-125).[8]

**Surface Treatment:** All P3 jugs have both inner and outer surfaces smoothed.

**Decoration:** No examples are painted.

**Deposits:** R59 (48, 34), P34 (in descending order of frequency)

#### 3.3.2.1.4 Cream Pinched-Mouthed Jugs with Orange Core (P4)

**Form:** All form types, from PJ1 to PJ6, are seen in the P4 assemblage.

**Fabric & Firing Technique:** The P4 fabric has a similar texture with similar inclusions to fabric B4 and F4. Chaff size becomes finer, and decreases dramatically in amount compared to P1. Fine-sized lime occurs in high to medium amounts. Medium-sized lime particles occur in fine to medium amount. These large inclusions

[8] Detailed information has been mentioned in section F3.

are visible on the surface of some examples (YH110560, Fig. 111; YH110591, Fig. 112). The P4 jugs also contain a balanced amount of fine grits and lime particles. However, the examples from P34 include more medium-sized grits than from other deposits. This difference was already seen in the B4 and F4 bowl types. The examples from the same deposit have a much more frequent cream core than orange core. They would thus fit Matsumura's 1st group: 'Cream ware with cream colored core' (2000: 124).[9] All except examples from P34 have an orange core, resulted from oxidation firing.

**Surface Treatment:** All P4 jugs have both inner and outer surfaces smoothed.

**Decoration:** No examples are painted.

**Deposits:** P34, R59 (34), P41 (in descending order of frequency)

#### 3.3.2.1.5 Grey/Black Pinched-Mouthed Jugs (P5)

**Form:** The forms of 2 jugs in this type are PJ3 and PJ4 (Fig. 110).

**Fabric & Firing Technique:** The P5 fabric has a similar texture with similar inclusions to fabric P3 and P4 above. These two examples have an orange core (YH130420, YH130428, Fig. 112). Their surface color is buff which is close to grey.

**Surface Treatment:** All P5 jugs have both inner and outer surfaces smoothed.

**Decoration:** No examples are painted.

**Deposits:** R59 (34)

### 3.3.2.2 Cooking Pots

This form occurs in five main types: Red/Reddish Brown Cooking Pots (C1), Pale Reddish Cooking Pots (C2), Cream Cooking Pots with Grey Core (C3), Cream Cooking Pots with Orange Core (C4) and Grey/Black Cooking Pots (C5) (Fig. 21).

#### 3.3.2.2.1 Reddish Brown/Red Cooking Pot (C1)

**Form:** The common forms for this type are CE, CI, CV (forms with collar) (Fig. 116, 121, 123).

**Fabric & Firing Technique:** The fabric becomes coarser compared to other types of open and closed vessels. All the C1 cooking pots include a high amount of grits. The grit inclusions are medium to coarse size. The increase in the amount of the grits

[9] Detailed information has been mentioned in section B4.

must have a functional purpose for this specific form. The high content increases the resistibility of the vessel to heat (Velde & Druc, 1999: 282). The C1 fabric has the similar amount of chaff, lime and mica with other types of vessels, like B1, PJ1 or P1. Most of the C1 type pots have a grey core. However, most of the samples seem to have had secondary firing traces during cooking. The paste color must have changed during this secondary firing. Some examples, which show no exposure to refiring, still preserve their core color in grey (YH110197, Fig. 118).

**Surface Treatment:** All C1 pots have both inner and outer surfaces smoothed.

**Decoration:** No examples are painted.

**Deposits:** R59 (34, 47, 48, 49), P87, P41, P78 (in descending order of frequency)

#### 3.3.2.2.2 Pale Reddish Red Cooking Pot (C2)

**Form:** The common forms for this type are CE, CI, CV (forms without collar) (Fig. 116, 121, 123).

**Fabric & Firing Technique:** The C2 fabric is similar to the C1 paste. However, the amount of both fine-size and medium-size lime particles is much higher than C1 fabric. Especially the medium lime particles break through the surface. C2 pots have a surface deposit "scum" which is a pale red layer covering the whole surface.[10] All examples have a high content of mica. Some of them have a pale grey core (YH130401, Fig. 119; YH130433, Fig. 122). Most of them have an orange core (YH130315, Fig. 120; YH130387, Fig. 122) although they show exposure to secondary firing which is visible with ash traces.

**Surface Treatment:** All C2 pots have both inner and outer surfaces smoothed.

**Decoration:** No examples are painted.

**Deposits:** R59 (34), P87, R65 (in descending order of frequency)

#### 3.3.2.2.3 Cream Cooking Pot with Grey Core (C3)

**Form:** The common forms for this type are CV (forms without collar), CE, and CI (Fig. 116, 121, 123).

**Fabric & Firing Technique:** The fabric becomes coarser compared to other types of open and closed vessels. Like C1, all the C3 cooking pots include a high amount of grits. The grit inclusions are medium to coarse size. The C3 type pots still contain

[10] Detailed information about 'scum' has been discussed in section B2.

more medium to fine lime particles than the C1 type pots but not as much as C2. All have a grey core.

**Surface Treatment:** All C3 type pots have both inner and outer surfaces smoothed.

**Decoration:** No examples are painted.

**Deposits:** P87, P34, R59 (34) (in descending order of frequency)

#### 3.3.2.2.4 Cream Cooking Pot with Orange Core (C4)

**Form:** The forms of 2 pots in this type are CV (YH110523, Fig. 122) and CI (YH110203, Fig. 124).

**Fabric & Firing Technique:** The fabric becomes finer compared to other types of cooking pots: C1, C2, C3 and C5. The pots from P41 especially include more fine-sized lime in a high amount. The C4 type pots contain more fine lime particles than the C3 type pots. Both have a cream core resulted from the oxidation firing.

**Surface Treatment:** All C4 type pots have both inner and outer surfaces smoothed.

**Decoration:** No examples are painted.

**Deposits:** P41

#### 3.3.2.2.5 Grey/Black Cooking Pots (C5)

**Form:** The forms of 2 pots in this type are CV (YH130330, Fig. 122) and CI (YH130349, Fig. 120).

**Fabric & Firing Technique:** The fabric is still coarse with many grit inclusions in fine to medium size. However, the examples do not include coarse inclusions unlike C1 and C2. Both have a grey core resulted from the reduction firing.

**Surface Treatment:** YH130330 has both inner and outer surfaces smoothed whereas YH130349 is polished.

**Decoration:** No examples are painted.

**Deposits:** P87

### 3.3.2.3 Kraters

This form occurs in five main types: Red/Reddish Brown Kraters (K1), Pale Reddish Kraters (K2), Cream Kraters with Grey Core (K3), Cream Kraters with Orange Core (K4) and Grey/Black Kraters (K5) (Fig. 22).

#### 3.3.2.3.1 Red/Reddish Brown Kraters (KR1)

**Form:** The common forms for this type are K1, K2, K3, and K4 (Fig. 128).

**Fabric & Firing Technique:** The fabric of type KR1 is very similar with the fabric of types B1, F1 and P1. Most of the KR1 type kraters have the similar high amount of chaff in fine to medium size as well as a moderate amount of lime and grits in fine to medium size.[11] One example here has a different type of inclusion (YH140229, Fig. 134): coarse shell particles.

Like other type of vessels, all KR1 examples have a high amount of mica.

All samples have grey cores after the reduction firing. Some examples have a light grey core (YH130537, Fig. 129) while other examples have a darker grey core (YH130610, Fig. 129; YH140229, Fig. 134; YH140232, Fig. 133).

**Surface Treatment:** The surface treatment of type KR1 shows variety. Some KR1 type kraters have both inner and outer surfaces smoothed (YH130320, Fig. 129; YH130233, YH130234, Fig. 130). Some examples have both surfaces burnished (YH130431, YH130388, YH130407, Fig. 129; YH130547, Fig. 133). Some kraters are red-slipped and burnished (YH130484, Fig. 131; YH130610, Fig. 129).

**Decoration:** The common motif is a thick horizontal line surrounding the neck (YH130610, Fig. 129). Its thinner version is also seen surrounding the neck of one example (YH130547, Fig. 133).

**Deposits:** R59 (34, 48), P78, P87, P34, R65, R33 (in descending order of frequency)

#### 3.3.2.3.2 Pale Reddish Krater (KR2)

**Form:** The form of one krater (YH110671, Fig. 136) in this type is K4.

**Fabric & Firing Technique:** The fabric of type KR2 is very similar with the fabric of the types B2, F2 and C2. The diagnostic feature is a high amount of lime in both fine and medium-size. There is a thin pale reddish layer covering both inner and outer surface. It has a high content of mica.

The example has a grey core, resulting from reduction firing.

**Surface Treatment:** This krater example has both inner and outer surfaces smoothed.

**Decoration:** YH110671 has two parallel horizontal dark lines surrounding the rim inside. It has a thicker dark line on the neck.

[11] Detailed information about the paste has been discussed in sections B1, F1 and P1.

**Deposits:** P34

#### 3.3.2.3.3 Cream Kraters with Grey Core (KR3)

**Form:** The common forms for this type are K2 and K4 (Fig. 128).

**Fabric & Firing Technique:** The fabric of type KR3 samples is almost the same with the fabrics of types B3 and F3. Like these other types, the KR3 fabric has medium lime particles in small amount. The medium lime inclusions break through the surface of some examples (YH130651, Fig. 131; YH130534, Fig. 135). The paste also includes fine lime specks in medium-to-high amount. The KR3 kraters contain a balanced amount of fine grits and lime particles. Only one example (YH110670, Fig. 134) has a finer fabric when compared to other examples in this type. Its size is also smaller when compared to other KR3 kraters. It might affect the potter's decision to use a finer fabric for a smaller-sized krater as seen in the fine paste of round-mouthed jugs. The examples have a grey core, resulting from reduced firing (YH130651, Fig. 131; YH130534, Fig. 135). Like other types, all the KR3 kraters have a high mica content.

**Surface Treatment:** Some examples are cream slipped and burnished (YH130651, YH130670). These examples would fit Matsumura's 1st group: "Cream ware with cream colored core", resulted from oxidation firing (2000: 124).[12] Some of them are cream slipped but just smoothed on both sides (YH110660, Fig. 134; YH130534, Fig. 135).

**Decoration:** The most common motifs are a thin or thick line surrounding the neck and the rim, especially on the ledge as well as a wavy line (YH130651, Fig. 131). One more example has a wavy line on the neck (YH110660, Fig. 134). One example has a sequence of ray motifs on its neck (YH130534, Fig. 135).

**Deposits:** P34, R59 (48), P87 (in descending order of frequency)

#### 3.3.2.3.4 Cream Kraters with Orange Core (KR4)

**Form:** The common forms for this type are K1, K2, K3 and K4 (Fig. 128).

**Fabric & Firing Technique:** The fabric of type KR4 samples is almost the same with the fabrics of types B4 and F4. The KR4 kraters contain a balanced amount of fine grits and lime particles. The examples have almost the similar amount of lime

[12] For more information, see section F3.

like KR2. The amount of chaff inclusions also becomes finer with lower density compared to the type KR1. The examples here have an orange core which shows the firing under oxidation conditions. Like other types, all the KR4 kraters have a high mica content.

**Surface Treatment:** Some KR4 kraters have both inner and outer surfaces smoothed (YH130607, Fig. 130; YH130657, YH130609, Fig. 136). Some examples are cream slipped and burnished (YH130469, Fig. 130; YH130608, Fig. 133). These examples would fit Matsumura's 1st group: "Cream ware with cream colored core", resulted from oxidation firing (2000: 124).[13]

**Decoration:** The most common motifs are a thin or thick line surrounding the neck and the rim, especially on the ledge (YH130469, YH130608). One example has a sequence of ray motifs on its neck (YH130606, Fig. 132).

The examples, which have both surfaces smoothed, are polychrome (YH130607, Fig. 130; YH130609, Fig. 136).

**Deposits:** R59 (34, 48), P34, P78 (in descending order of frequency)

#### 3.3.2.3.5 Black/Grey Kraters (KR5)

**Form:** The common forms for this type are K1, K2, and K3 (Fig. 128).

**Fabric & Firing Technique:** The fabric of this type is almost the same with the fabric of the type F5 and some examples from the B5 bowls. The paste has a moderate amount of all types of inclusions: chaff, grit, lime and mica. The examples have a grey/black core. The KR5 kraters thus must have been fired under the reduction conditions.[14]

**Surface Treatment:** All KR5 kraters are polished.

One of them (YH130444, Fig. 132) is more carefully polished than other examples (YH110525, YH130468, Fig. 135).

**Decoration:** No examples are painted.

**Deposits:** P41, R59 (34) (in descending order of frequency)

### 3.3.2.4 Pithoi

This form occurs in four main types: Red/Reddish Brown Pithoi (PT1), Pale Reddish

[13] For more information, see section F2b.
[14] For more information about this type of black/grey vessels, see section B5.

Pithoi (PT2), Cream Pithoi with Grey Core (PT3), Cream Pithoi with Orange Core (PT4) (Fig. 23).

#### 3.3.2.4.1 Reddish Brown/Red Pithoi (PT1)

**Form:** The common forms for this type are P1, P2 and P3 (Fig. 140).

**Fabric & Firing Technique:** The fabric of type PT1 is very similar with the fabric of types B1, F1, KR1 and P1. The paste surprisingly does not have such a coarse texture as the fabric of the type C1 reddish brown pots. Like the type KR1, most of the PT1 type pithoi have a moderate amount of lime and grits in fine to medium size.[15] However, the PT1 fabric has a higher amount of chaff in fine to medium size. All the PT1 pithoi have a dark grey core. Like other types of vessels, all PT1 samples have a high amount of mica.

**Surface Treatment:** All examples have both inner and outer surfaces smoothed.

**Decoration:** No examples are painted.

**Deposits:** R59 (34, 48), R65, P87, P41, R33 (in descending order of frequency)

#### 3.3.2.4.2 Pale Reddish Pithoi (PT2)

**Form:** The common forms for this type are P2 and P3 (Fig. 140).

**Fabric & Firing Technique:** The fabric of type PT2 is very similar with the fabric of types B2, F2 and C2. Like the type KR2, most of the PT2 type pithoi have a moderate amount of lime and grits in fine to medium size.[16] However, the PT2 fabric has a higher amount of chaff in fine to medium size. For instance, YH130408 has a high amount of chaff in coarse size. All the PT2 pithoi have a dark grey core. The high amount of chaff carbonized because of firing is visible in their profiles. The examples here have a surface deposit 'scum' (YH130402, Fig. 144; YH130408, Fig. 143).[17] Like other types of vessels, all PT2 samples have a high amount of mica.

**Surface Treatment:** All examples have both inner and outer surfaces smoothed.

**Decoration:** No examples are painted.

**Deposits:** R59 (34)

[15] Detailed information about the paste has been discussed in section B1, F1 and P1.
[16] Detailed information about the paste has been discussed in section B1, F1 and P1.
[17] For 'scum', see section B2.

#### 3.3.2.4.3 Cream Pithoi with Grey Core (PT3)

**Form:** The common forms for this type are P1, P2 and P3 (Fig. 140).

**Fabric & Firing Technique:** The fabric of type PT3 is very similar with the fabric of type B3. The PT3 fabric also has a higher amount of lime inclusions than PT1. Coarse lime specks also increase compared to PT1, and are visible on the surface. The fabric also includes the range between medium to fine lime specks in medium density. The PT3 pithoi contain a moderate amount of chaff and mica like PT1. All examples have a grey core which points to the reduction technique during the firing process. However, their cores are just as dark grey as the PT1 samples.

**Surface Treatment:** All examples have both inner and outer surfaces smoothed. Some examples have a cream slip (YH130548, Fig. 143; YH130410, Fig. 142).

**Decoration:** No examples are painted.

**Deposits:** R59 (34, 47), P78 (in descending order of frequency)

#### 3.3.2.4.4 Cream Pithos with Orange Core (PT4)

**Form:** The form of the single pithos (YH110583, Fig. 145) in this type is P3.

**Fabric & Firing Technique:** The fabric of type PT4 is very similar with the fabric of type B4, especially B4 bowls from P34. Like these bowls, the PT4 fabric also has a higher amount of grit and lime inclusions than other types within the same form. Coarse lime specks also increase compared to PT1, and are visible on the section. The PT4 pithos contains a moderate amount of mica like PT1. It has an orange core which points to the oxidation technique during the firing process.

**Surface Treatment:** YH110583 is cream slipped on the outer surface. It has both inner and outer surfaces smoothed.

**Decoration:** It is not painted.

**Deposits:** P34

## 3.4 The YH Ware Types

5 major ware types are observed for each different form group (except pithos). It is thus possible to summarize the YH MIA types into five main groups in the typology (Fig. 24): *(WareType1)* Red/Reddish Brown Wares, *(WareType2)* Pale Reddish Wares, *(WareType3)* Cream Wares with Grey Core, *(WareType4)* Cream Wares with Orange Core and *(WareType5)* Grey/Black Wares.

### 3.4.1 Red/Reddish Brown Wares (WareType1)

**WareType1** could be observed in every vessel form: **B1** (Bowls with Plain Rim), **F1** (Bowls with Flaring Rim), **R1** (Round-Mouthed Jugs), **P1** (Pinched-Mouthed Jugs), **C1** (Cooking Pots), **KR1** (Kraters) and **PT1** (Pithoi).

**Form:** It is possible to find WareType1 in almost all form groups: **BP1-BP9** (Bowls with Plain Rim), **BF1-BF3** (Bowls with Flaring Rim), **RJ1-RJ3** (Round-Mouthed Jugs), **PJ1-PJ4** (Pinched-Mouthed Jugs), **CE, CV, CI** (Cooking Pots), **K1-K4** (Kraters) and **P1-P3** (Pithoi).

**Fabric & Firing Technique:** The fabric is neither fine nor coarse, but medium quality. The paste includes a moderate amount of every inclusion type (lime, chaff, grit and mica) in fine to medium size. However, it shows slight differences according to different vessel form. For instance, the fabric becomes finer for the round-mouthed jugs than for the other forms. On the other hand, the paste becomes coarser with a higher amount of grits in the form of cooking pots. The texture is still similar with similar type of inclusions. Most examples have a grey core which results from a dominant reduction firing. Other examples have an orange core.

**Surface Treatment:** Most of the examples have a non-slipped but rough-burnished surface.

**Decoration:** The painted examples mostly have simple motifs like a sequence of lines in different orientations (Fig. 25).

### 3.4.2 Pale Reddish Wares (WareType2)

**WareType2** could be observed in every vessel form: **B2** (Bowls with Plain Rim), **F2** (Bowls with Flaring Rim), **R2** (Round-Mouthed Jugs), **P2** (Pinched-Mouthed Jugs), **C2** (Cooking Pots), **KR2** (Kraters) and **PT2** (Pithoi).

**Form:** The common vessel forms seen in this type are **BP2, BP5, BP7** (Bowls with Plain Rim), **BF2-BF3** (Bowls with Flaring Rim), **RJ2** (Round-Mouthed Jugs), **PJ1-PJ3** (Pinched-Mouthed Jugs), **CE, CV, CI** (Cooking Pots), **K4** (Kraters) and **P2-P3** (Pithoi).

**Fabric & Firing Technique:** Pale Reddish Wares contain high to medium amounts of lime specks in medium to fine size as well as similar amount of fine grits. Coarse lime particles occasionally break through the surface. Almost all examples in this assemblage have a high mica content. This ware type has mostly an orange core but there are a group of sherds having a grey core.

**Surface Treatment:** Pale Reddish Wares have a rough-burnished surface with a color which is neither red nor cream. This surface might be identified as 'scum', after the calcerous or salty water in the clay evaporates and leaves a thin pale red layer like a slip[18]. Another option could be because of the high content of mica with firing (Fig. 26).

**Decoration:** The painted examples mostly have simple motifs like a sequence of lines framed on the rim inside or on the neck outside.

### 3.4.3 Cream Wares with Grey Core (WareType3)

**WareType3** could be observed in every vessel form: **B3** (Bowls with Plain Rim), **F3** (Bowls with Flaring Rim), **R3** (Round-Mouthed Jugs), **P3** (Pinched-Mouthed Jugs), **C3** (Cooking Pots), **KR3** (Kraters) and **PT3** (Pithoi).

**Form:** The common vessel forms seen in this type are **BP1, BP2, BP4, BP8** (Bowls with Plain Rim), **BF2-BF3** (Bowls with Flaring Rim), **RJ1-RJ3** (Round-Mouthed Jugs), **PJ1-PJ3** (Pinched-Mouthed Jugs), **CE, CV, CI** (Cooking Pots), **K2-K4** (Kraters) and **P1-P3** (Pithoi).

**Fabric & Firing Technique:** WareType3 vessels have a similar fabric with similar inclusion types and density with WareType1 in medium quality, but a slight increase in the amount of lime.[19] All examples have a grey core, resulting from reduction firing.

**Surface Treatment:** WareType3 vessels have an exterior cream surface which is smoothed. A small number has a thin layer of cream slip (Fig. 27).

[18] Detailed information about 'scum' has been mentioned in section B2.
[19] For detailed information about fabric, see section B3.

**Decoration:** The painted examples mostly have simple motifs like a sequence of lines in different directions framed on the rim inside or on the neck outside. However, there are more elaborated decorations on the round-mouthed jugs in this type with net pattern and wavy lines.

### 3.4.4 Cream Wares with Orange Core (WareType4)

**WareType4** could be observed in every vessel form: **B4** (Bowls with Plain Rim), **F4** (Bowls with Flaring Rim), **R4** (Round-Mouthed Jugs), **P4** (Pinched-Mouthed Jugs), **C4** (Cooking Pots), **KR4** (Kraters) and **PT4** (Pithoi).

**Form:** The common vessel forms seen in this type are **BP7-BP8** (Bowls with Plain Rim), **BF2-BF3** (Bowls with Flaring Rim), **RJ1-RJ3** (Round-Mouthed Jugs), **PJ1-PJ6** (Pinched-Mouthed Jugs), **CV, CI** (Cooking Pots), **K1-K4** (Kraters) and **P3** (Pithoi).

**Fabric & Firing Technique:** The fabric is similar with the fabric of WareType3. However, the amount of grit is increasing in WareType4. Another change in the fabric of WareType4 is the decrease in the amount of chaff. The fine chaff inclusions are few in WareType4 paste. It still includes medium lime particles in small amount. They also include fine lime specks in medium-to-high amount.[20] All examples in this type have an orange core, resulting from oxidation firing.

**Surface Treatment:** Most of the examples are cream-slipped and burnished. The vessels from P34 especially have a thicker slip than from other deposits. The other group of cream vessels have just a cream surface but no slip. These examples have both inner and outer surfaces smoothed like pinched-mouthed jugs, cooking pots and pithos.

**Decoration:** The painted examples are decorated with more composite motifs like meanders or festoons (Fig. 28).

[20] For detailed information about fabric, see section B4, F4, R4 or K4.

### 3.4.5 Grey/Black Wares (WareType5)

Although the number of **WareType5** vessels is small when compared to other ware types, this type could be observed in all vessel forms except pithos: **B5** (Bowls with Plain Rim), **F5** (Bowls with Flaring Rim), **R5** (Round-Mouthed Jugs), **P5** (Pinched-Mouthed Jugs), **C5** (Cooking Pots) and **KR5** (Kraters).

**Form:** The common vessel forms seen in this type are **BP9** (Bowls with Plain Rim), **BF4** (Bowls with Flaring Rim), **RJ2-RJ3** (Round-Mouthed Jugs), **PJ3-PJ4** (Pinched-Mouthed Jugs), **CV, CI** (Cooking Pots) and **K1-K3** (Kraters).

**Fabric & Firing Technique:** The paste of WareType5 has a moderate amount of all types of inclusions: chaff, grit, lime and mica in fine to medium size like WareType1. The examples have a grey/black core. They must have been fired under reduction conditions according to their grey/black core and grey/black surfaces (Fig. 29).

**Surface Treatment:** The WareType5 vessels show variety in surface treatment. However, the majority is polished in every vessel form like bowls, jugs, cooking pot and kraters. Some examples, especially in the form of grey bowls with plain rim, have just both surfaces smoothed.[21]

**Decoration:** No examples are painted.

[21] For detailed information about surface treatment, see section B5.

# CHAPTER 4

# THE RELATION BETWEEN CHRONOLOGY AND STRATIGRAPHY

In this chapter, the relation between YH MIA ware types and the MIA deposits is studied by frequency analysis. The aim of this analysis is to observe whether there is any change in the ware types throughout the MIA occupational phases. It could thus give clues about the development in the pottery manufacture in YH during MIA. Five main ware types are determined in this thesis: WareType1 (Red/Reddish Brown Wares), WareType2 (Pale Reddish Wares), WareType3 (Cream Wares with Grey Core), WareType4 (Cream Wares with Orange Core) and WareType5 (Black/Grey Wares)[22]. Three main occupational phases and one sub-phase are determined throughout the MIA: I-9 (latest), I-9/I-10, I-10 and I-11 (earliest). The chart shows the distribution of the ware types according to the excavated deposits (Table 4; Fig. 30) in a chronological order (Fig. 7) and the distribution of the ware types according to the MIA occupational phases (Table 5).

This analysis based on deposits shows that WareType1 occurs in all deposits with the frequency from 64.3% (P34, I-9 phase) to 76.3% (R65, I-10 phases) (Fig. 30)[23]. WareType1 thus has a high frequency from the earliest (71.4% R59, I-11 phase) to

[22] For more information about the YH main ware types, see section 3.4.
[23] The numbers of the MIA sherds from 2 contexts are small: 10 from P74 and 8 from R33, and may be statistically misleading. However, they are included in the overall frequency for each MIA phase.

the latest deposits (64.3% P34, I-9 phase). In the analysis based on phase (Table 5), there are some slight decreases or increases between the frequencies throughout the phases. However, WareType1 is the dominant type seen most in every level with the average frequency of 70%. WareType1 could thus be local production which the YH community kept producing from the earliest to the latest phase.

WareType3 has a lower frequency than WareType1. It ranges from 3.5% (P41, I-9 phase) to 12.5% (R65, I-10 phase) and 12% (R59, I-11 phase) (Fig. 30). At the analysis based on phase, it is observed that its frequency decreases from 11.6% (I-11 phase) to 4.3% (I-9 phase) (Table 5). At this point, it should be noted that WareType1 and WareType3 are very similar in fabric and firing, both have a grey core. The difference between the fabrics of these types is the increase in amount of medium-sized lime particles in WareType3. However, the fabric quality and the amount of other inclusions are very similar between these two types. WareType1 and WareType3 vessels thus might be local production although WareType3 was not so common as WareType1.

WareType2 has a much lower frequency compared to WareType1 and WareType3. It is seen in the frequency between 2.6% (P41, I-9 phase) and 8.3% (R65, I-10 phase) according to the deposit distribution. When its phase distribution is viewed, WareType2 is seen most at the early phases 5.5% (I-11 phase) and 8.3% (I-10 phase). However, its frequency decreases to 2.5% at the sub-phase I-9/I-10 and a slight increase to 3.4% at the phase I-9 but it is still less than the early phases. It could be concluded that the number of WareType2 vessels decreases from the early phases to late phases like WareType3. At this point, it should be noted that WareType2 is similar in fabric quality and tempering with WareType1 and WareType3. The fabric of WareType2 contains a moderate amount of lime specks like WareType3. WareType2 vessels contain a similar amount of grit, mica and chaff like WareType1 and WareType3. Some examples are difficult to categorize clearly as WareType1 or WareType2 (bowls: YH130436, YH130396, YH130404; jugs: YH140219, YH130650; cooking pot: YH130513; krater: YH130147, YH140232; pithos: YH110672). These examples have a thin layer in pale reddish to red.

Furthermore, surface treatment on other examples is difficult to distinguish between cream or scum in pale red (bowls: YH130473, YH130460, YH130452, YH130371, YH110515; jugs: YH130469; cooking pot: YH130666). This situation might result from the firing process since they have similar texture. It could be concluded that the technique for preparing clay, forming and finishing is similar for WareType1, WareType2 and WareType3. This might increase the possibility that WareType2 and WareType3 could be local production like WareType3[24].

WareType4 wares are coming mostly from the latest pit deposit P34 with the frequency 23.7% (Fig. 30). Its phase distribution shows an increase from the earliest (6.15%, I-11 phase) to the latest phase (17.3%, I-9 phase), whereas the number of WareType3 vessels decreases. As mentioned in section 3.4 (The YH Ware Types), WareType4 (Cream Wares with Orange Core) has a different fabric and firing from WareType3 (Cream Wares with Grey Core). The fabric of WareType4 includes more grits and less lime tempering when compared to WareType3. WareType1 vessels from I-9 phase also include more grit than those from the levels I-9/I-10, I-10 and I-11. It should be noted that WareType1 is still dominant with the frequency 68.3% at the phase I-9. However, the change in tempering and firing, especially at WareType4, calls attention to these issues: WareType4 (especially those from P34) could be imported from or influenced by the east pottery zone with 'painted pottery with matt dark paint'. It thus needs to be analysed further by a form comparison with the east pottery zone.

The vessels in WareType5 are coming from the big room (R59) at the earliest level. These samples have a fine quality fabric which is different from the fabric of WareType1 and WareType3, both of medium quality. Their forms are also different from the diagnostic MIA forms. These sherds might be tossed up from the earlier levels below since the Bronze Age levels occur immediately below the MIA features in the excavation area. However, the samples from the latest deposits (P74, P41, and P34) are similar in form with the diagnostic MIA ceramics. These WareType5 wares

[24] This observation on fabric, finishing and firing is just based on naked-eye. It needs to be investigated further especially with chemical and mineralogical analyses.

also have similar fabric to WareType1 and WareType3 but different firing because of their black and grey color. The same questions could be asked for WareType5: could it be imported or influenced by the ‘monochrome grey ware’ from the west? It thus needs to be analysed further by comparing the vessel forms from the west zone.

To sum up, WareType1 might be local production since WareType1 occur in all deposits from the earliest to latest MIA levels. WareType3 and WareType2 might be local production since these types of wares share the similar fabric and firing technique with WareType1 vessels. However, WareType4 is different from WareType3 in firing, fabric and surface treatment although both are cream wares. WareType3 might be local versions produced by the YH community to imitate WareType4 wares. However, this still does not explain the distinction between WareType2 and WareType4 wares and also the distinction for WareType5 wares. The comparisons with the pottery groups of different sites in vessel form could thus enable us to answer these questions about WareType4 and WareType5 as well as about the pottery industry of the YH community.

# CHAPTER 5

# COMPARISONS BETWEEN YASSIHÖYÜK AND OTHER MAIN SITES IN CENTRAL ANATOLIA

## 5.1 Methodology for Pottery Comparisons

In this chapter, the YH MIA pottery group will be compared with the MIA pottery collections from others sites in Central Anatolia. It is aimed here to place the YH MIA pottery culture among the pottery zones in Central Anatolia. I limit the scope to sites which have adequate publications about their MIA pottery. I have thus chosen four main sites in Central Anatolia to compare in ascending order of distance from YH (Table 1; Fig. 31). The four sites are also representative of the separate ceramic zones related to the YH assemblage. *Kaman-Kalehöyük* is located 30 km west of YH as a neighbour site. *Boğazköy* is located 110 km northeast of YH as the representative site for the pottery zone with 'painted pottery with matt dark paint' in the east (Genz 2011: 349). *Yassıhöyük (Gordion)* is located 215 km west of YH as the representative site for the pottery zone with 'monochrome grey wares' in the west (Genz 2011: 348; Matsumura, 2000, 120). *Porsuk* is located 250 km southeast of YH as the representative site for the south.

Comparisons between the YH assemblage and pottery from the four sites are based on form and decoration to the extent that the relevant publications provide vessel information. My aim is here to observe the differences and similarities in ceramic

manufacture and style between YH and other sites. Once all comparisons between YH and other sites are completed, I will discuss the results by considering Central Anatolia in terms of overall pottery cultures.

## 5.2 Comparisons

### 5.2.1 Yassıhöyük and Kaman-Kalehöyük

Matsumura's Ph.D. thesis (2005) provides a comprehensive catalogue of the Kaman-Kalehöyük (KL) Iron Age ceramics. The YH samples from each form group are compared with the KL MIA samples represented in this catalogue: bowls with plain rim (Fig. 32), bowls with flaring rim (Fig. 33), round-mouthed jugs (Fig. 34), pinched-mouthed jugs (Fig. 35), cooking pots (Fig. 36), kraters (Fig. 37) and pithoi (Fig. 38).

#### 5.2.1.1 Form Comparison

The similar *bowls with plain rim* seen at both sites cover forms BP1 to BP9, but mostly occur with BP3, BP5 and BP8 (Fig. 32). The examples from both sites are very similar in form and fabric. However, the YH examples contain a high amount of mica. The similar *bowls with flaring rim* from both sites involve forms BF1 to BF3 (Fig. 33). However, the KL examples show more variety in decoration than the YH bowls. The YH *round-mouthed jugs* similar in form with the KL examples involve form RJ2, mostly from R59 (I-11, earliest phase) and P41 (I-9, latest phase). The *pinched-mouthed jugs* in similar form from both sites involve forms PJ1, PJ2 and PJ3 (Fig. 35). The YH *cooking pots* showing similarity with those from KL are in the form of CE, recovered mostly from R59 (I-11) and in the form of CV from the deposit P34 (I-9) (Fig. 36). The YH *kraters* similar in the form with the KL examples involve forms K2 and K3 (Fig. 37). However, the similar situation for the bowls with flaring rim could be seen in the form of krater: the KL examples show more variety in decoration. The similar YH *pithoi* with those from KL are mostly in the form of P1 and P2 (Fig. 38).

The YH samples mostly match the KL MIA samples from the levels IIc2-3. However, some YH samples share common form features with those from the KL EIA level (IId1-3) as seen in the round-mouthed jugs (Fig. 34), kraters and pithoi. Matsumura underscores the continuity in vessel forms, fabric types and painting styles from the KL IId (EIA) to IIc level (MIA) like krater, round-mouthed jug and carinated bowl (2000, 126; 2001, 104-105).

#### 5.2.1.2 Ware Comparison

Matsumura's Ph.D. thesis (2005) and his articles about the technique of the Iron Age pottery (2000 & 2001) also give comprehensive information about the KL Iron Age wares. He determines 5 main types for the KL wares according to their manufacturing techniques: Grey, Fine Black Burnished, Plumbeous, Gold Wash and Cream Wares. Cream Wares are separated into 4 sub-groups (Matsumura, 2000: 124-125). All except the grey and cream wares are red/reddish brown or red-slipped wares like the big group in the Yassıhöyük assemblage (Matsumura, 2005: 219-240). The similarities between the YH and the KL vessels in terms of firing technique and fabric have been discussed above (section 3.3). To sum up here, there are many similarities in types of *Red/Reddish Burnished wares* (the YH WareType1 and WareType2) and all sub-groups of *Cream Wares* (the YH WareType3 and WareType4) between the two sites. This similarity could be also observed in fabric and surface treatment for each type of ware. The only marked difference in fabric is that the YH vessels contain a high amount of mica. The KL wares include mica but not so much as the YH samples. To compare the samples from two sites chronologically, the YH ware types (Red Burnished/Red Slipped and Cream Wares) match ware types from the KL MIA level (IIc2-3 and IIa6-IIc1). However, some of the YH *Grey/Black Wares* (WareType5) show similar features with those from the KL EIA (IId1-3) and LIA levels (IIa3-5 & IIa1-2) (Table 6, Fig.39-40).[25]

[25] For technique and fabric, see section 3.3 (B5, F5, R5, K5)

### 5.2.2 Yassıhöyük and Boğazköy

Bossert (2000) provides a catalogue of the Boğazköy Iron Age ceramics. The YH samples from each form group are compared with the Boğazköy MIA samples represented in this catalogue. YH shares only 2 types of forms from Boğazköy: krater and bowl with flaring rim. These vessel types might have been used for special activities, since those from Boğazköy have elaborate decoration. The YH examples mostly match with the Boğazköy samples from the North West Slope, Büyükkaya ($9^{th}$ c. BC) and Büyükkale IIb levels ($8^{th}$ c. BC) (Fig. 41-42) (Genz, 2000: 44).

The YH *kraters* similar in form with those from Boğazköy cover all forms from K1 to K4. These YH vessels belong to WareType1, WareType4 and WareType3 in descending order of frequency (Fig. 41). There is a slight increase in the number of similar YH vessels in WareType1 and WareType4 in parallel with those from Büyükkale phase. The YH *bowls with flaring rim* similar with the Boğazköy examples cover forms from BF1 and BF3 (Fig. 42). These YH wares are mostly in WareType1 and WareType4. However, the YH wares are decorated with simpler motifs compared to the Boğazköy vessels.

### 5.2.3 Yassıhöyük and Gordion

Sams (1994) provides a comprehensive catalogue of the Gordion Early Phrygian ceramics. The YH samples from each form group (bowls, jugs, pots, kraters and pithoi) are compared with the Gordion Early Phrygian samples represented in this publication. The YH grey wares (WareType5) share only 2 similar forms with monochrome grey wares from Gordion: krater and bowl with flaring rim (Fig. 43). These similar YH *bowls with flaring rim* are in the form of BF5 from P41 (I-9 phase). The similar YH *kraters* in the form of K1 and K2 occur in the same deposit P41 in the latest phase. However, these YH vessels (WareType5) are few in numbers. The same situation could be also observed in Kaman-Kalehöyük. Matsumura draws attention to the low frequency of grey wares from the KL IIc level (MIA) whereas this ware type is observed to be dense in Gordion during the Early Phrygian period (2000, 121).

The YH samples match with the Gordion samples from Terrace Fill and EPB V levels (YHSS 6A in the new chronology) (Voigt & Henrickson, 2000: 41). It seems these comparable samples are from the later phase of the MIA or toward the beginning of the LIA.

### 5.2.4 Yassıhöyük and Porsuk

Dupré (1984) provides a catalogue of the Porsuk LBA and IA ceramics. The YH samples from each form group are compared with the IA samples represented in this publication. Surprisingly, YH shares a larger number of similar forms with Porsuk than Boğazköy and Gordion, although Porsuk is the farthermost site from YH (4 days of walking, Table 1). Similar forms are observed for all shapes except kraters and pithoi. Similarities occur especially for the WareType1 vessels, which were probably for daily usage: bowls with plain rim (Fig. 44-45), round-mouthed jugs (Fig. 46-47), pinched-mouthed jugs (Fig. 48) and cooking pots (Fig. 51).

The YH *bowls* similar in form with those from Porsuk IV mostly involve forms BP1, BP5 and BP7 (Fig. 44). However, the YH bowls similar in form with those from Porsuk III include different forms from the first comparison above. These similar bowls cover forms BP4, BP5, BP6 and BP8 (Fig. 45). The examples from both sites have similar motifs like the sequence of lines and thick rays. However, those from Porsuk III and IV are more elaborated with additional motifs. Many examples from Porsuk have decoration on their exterior surface (Dupré, 1984: Pl. 45-49) whereas there are just a few similar examples from YH.

The YH *round-mouthed jugs* similar in form to Porsuk IV examples involve forms RJ1 and RJ2 (Fig. 46). These YH vessels were recovered mostly from R59 (I-11) and P41 (I-9).Those from YH similar with Porsuk III examples share forms RJ2 and RJ3 (Fig. 47). These YH wares are from P34 (I-9 phase). The change in motif style from Porsuk IV to III could be observed in the change in motifs on those from R59 (I-11)

to P34 (I-9) (Fig. 46-47). This similarity in various vessel forms might strengthen the connection between YH and the Tabal Region (Region 3).

The *pinched-mouthed jugs* from YH similar with Porsuk III are only in form PJ2 (Fig. 48). However, the Porsuk examples have an elaborate decoration on the exterior surface for which there is no similar sample in YH. The *cooking pots* from YH similar in form with Porsuk III cover forms CE and mostly CV (Fig. 49). However, these comparisons could not give any clue about the related phase sequence since these similar YH vessels are uncovered from all deposits in all levels.

The YH samples mostly match the Porsuk Iron Age samples from level III. However, a group of YH samples share common form features with those from Porsuk IV (Early Iron Age) as seen for the bowls with plain rim (Fig. 44) and the round-mouthed jugs (Fig. 46) in terms of form and decoration. This similarity between the YH MIA round-mouthed jugs and the KL IId jugs (Early Iron Age) is also observed[26]. On the other hand, a comparison based on motifs on the round-mouthed jugs shows a parallel with the change in motifs from I-11 to I-9 in YH like the change in decoration from Porsuk IV to Porsuk III round-mouthed jugs.

### 5.3 Summary

On the basis of the comparison with Kaman-Kalehöyük (KL), it is observed that there is a close similarity between the pottery assemblage of these neighbouring höyüks in a radius of 25 km,[27] in all aspects of form, fabric and decoration. This similarity could be followed from KL IId1-3 and IIc 2-3 to IIa6-IIc1. On this point, the YH MIA assemblage supports Matsumura's assessment about the continuity in the pottery cultures from the KL IId to IIc levels (2000, 126; 2001, 104-105). It should be noted here that there is a wider range of decoration in Kaman-Kalehöyük than YH. However, the excavated areas at Kaman-Kalehöyük are also more extensive than Yassıhöyük. The ceramic sample from KL is considerably larger than

[26] See section 5.2.1, Yassıhöyük and Kaman-Kalehöyük.
[27] See section 5.2.1, Yassıhöyük and Kaman-Kalehöyük.

the YH assemblage. The diagnostic difference between the two neighbours is that the YH vessels include a higher amount of mica in their fabric, resulting from the local clay sources. This situation could strengthen the possibility that the YH community had their own pottery manufacturing tradition by taking advantage of the local clay sources during the production.

In the second comparison with Boğazköy, the similarity in forms of kraters and bowls with flaring rim from both sites is quite noticeable. Especially, the YH vessels in WareType1 and WareType4 share similar forms with those from Boğazköy. The similarity in form and decoration between the wares from both sites increases slightly toward Büyükkale level IIb which is the later phase in the MIA (Genz, 2000: 44). It could thus give us clues about the increasing relationship between the YH community and the communities in the east pottery zone during the late phase of the MIA.

In the case of Porsuk, the two sites share a high percentage of similar vessel types especially in the forms of bowls, jugs and cooking pots, and in WareType1. This similarity could be traced from Porsuk IV to III[28]. It seems there is a connection between the YH community with the south region from the YH I-11 to YH I-9 levels. Especially the round-mouthed jugs from the YH I-10, I-9/I-10 and I-11 show a similarity with those from Porsuk IV. On the other hand, the round-mouthed jugs from YH I-9 (especially from P34) are similar with those from Porsuk III in vessel form. In the case of Boğazköy however, the YH assemblage show ties with those from Boğazköy vessels in their decoration, but just taking the simple motifs. This situation could be interpreted as an interconnection of YH with both the south and the east pottery zones during the late phase of the MIA.

In case of the pottery zone with ‘monochrome grey wares’ on the west of the invisible border described by Genz, the number of YH vessel forms also found at Gordion is less than for the other pottery zones. Matsumura underlines that the

[28] Porsuk IV corresponds to KL IId (Early Iron Age) in terms of vessel form and decoration.

influence from the west occurs later than the MIA in Kaman-Kalehöyük (2000, 121). A similar situation could be observed in the case of Yassıhöyük according to the small number of grey wares in the assemblage. As an important note here, this small number of sherds mostly comes from the YH I-9 phase including the deposits P34 and P41. It also supports that a slight influence from the west pottery zone is seen only in the late phase of the MIA at Yassıhöyük, although these YH grey wares might have been thrown from other places into these pit deposits.

# CHAPTER 6

# CONCLUSION

In the YH MIA typology, five main ware types have been determined: Red/Reddish Brown Ware (WareType1), Pale Reddish Ware (WareType2), Cream Ware with Grey Core (WareType3), Cream Ware with Orange Core (WareType4) and Grey/Black Ware (WareType5). When the distribution of these ware types to the MIA deposits is reviewed, WareType1 is seen in all MIA deposits and in all levels with high frequency, in the range from 66.6% to 76%. WareType2 and WareType3 have a similar texture with WareType1 although their number is dramatically less than the WareType1 vessels.[29] WareType1, WareType2 and WareType3 could thus be assumed as local wares.[30] WareType4 has a different fabric, firing technique and more elaboration in motifs. WareType4 vessels occur in every deposit but in very small percentages until the YH I-9 phase. However, in the latest phase I-9, the number of vessels in WareType4 is increasing up to about 17.3% from 6.15% in the early phase I-11.[31]

On this point, the YH assemblage is compared with the one from Porsuk, as a representative site for Tabal region, from Boğazköy, as a representative site for the

[29] For detailed information about the frequency analysis, see Table.5 and Fig. 30.
[30] It should be noted that the YH assemblage does not show any dramatic change in all aspects of form, fabric and firing technique from I-11 (earliest phase) to I-9/I-10 sub-phase. The most common types seen during these phases are WareType1, WareType2 and WareType3.
[31] In the latest deposit (P34), its frequency increases up to 23.5%.

east pottery zone, and from Gordion, as a representative site for the west pottery zone separated at Genz' invisible border (2011: 349). When the vessels from the earliest (I-11) to the latest phase (I-9, especially those from P34) are reviewed, there is a continuing influence from the south (Porsuk) in form and decoration throughout Porsuk IV and III. However, the influence from the east pottery zone (Boğazköy) is increasing slightly from Büyükkaya to the Büyükkale levels especially in the form of special vessels like krater and bowl with flaring rim and in decoration. On the other hand, this influence in terms of decoration is just based on the simple motifs. The composite motifs are hardly seen on the YH assemblage, especially on the vessels in type of WareType1, WareType2 and WareType3. A group of vessels share just simple elements of motifs from Boğazköy and Porsuk, especially in the late phase of the MIA. In the case of the pottery zone on the west of Halys River, the number of similar YH vessel forms found at Gordion is less than for the other pottery zones. This small number of sherds was excavated mostly from the YH I-9 phase, including the deposit P41. It might support that a slight influence from the west pottery zone is seen only in the late phase of the MIA. It thus could give a picture showing the situation of YH between these pottery zones separated by the invisible border proposed by Genz: the YH community might have continued its own pottery manufacture (WareType1, 2 and 3) with the continuing influence from the south in form and decoration (all types except WareType5). Throughout the MIA, there was increasing influence from the east in decoration (WareType3 and WareType4), but scarcely no influence from the west (WareType5) until the late phase of MIA.

The comparison between YH and Porsuk is helpful to answer the research question of the thesis from the historical context: whether the historical context of YH could be supported by a pottery study. The two lead strips with Luwian hieroglyphs from YH might signal a community which could be politically associated with the Tabal region during MIA.[32] YH shares the highest number of similar vessel forms with Porsuk, a representative site for Tabal region. Although the frequency of applying motifs and the elaboration in decoration is less in YH compared to Porsuk, the considerable number of similar vessel forms[33] between the two sites strengthens the

[32] For detailed information about the lead strips, see section 1.1.
[33] Especially those for daily usage like bowls with plain rim, round-mouthed and pinched-mouthed

connection between YH and the Tabal Region according to their pottery. This pottery study thus might support the historical context of YH.[34] However, when the quality and variety in form and decoration as well as fabric are reviewed, the YH pottery suggests a village community with household production.[35] They might have produced local pottery by their own techniques not so professionally as at Gordion, Boğazköy and Porsuk, but they show outside influence from these urban sites (the south and the east pottery zones) especially to the later phase of the MIA.

jugs and cooking pots.

[34] Another aim of this study was to make a small contribution to establish a common chronology for the MIA by the comparisons between the sites and YH. However, as the scholars point out (Genz, 2011: 333; Summers, 2009: 664), it is quite difficult to make a clear correlation between the MIA phases of different sites and establish a common chronology among them only with pottery study.

[35] Summers (2009: 664) identifies the neighbouring site Kaman-Kalehöyük as a 'small urban centre' during MIA. The similarity between these two neighbour sites in form, fabric and firing technique could suggest another possible identity for the YH community as a 'small urban centre' during the same period.

# REFERENCES


Aydoğan, R., & Hawkins, D. (2009). Kırşehir Yassıhöyük'ten Ele Geçen Luvi Hiyeroglif Yazılı Kurşun Levha. *Anadolu Medeniyetleri Müzesi'nin Yıllığı 2007-8*, 21, 7-14.

Bossert, E.M. (2000). *Die Keramik phrygischer Zeit von Boğazköy: Funde aus den Grabungskampagnen 1906, 1907, 1911, 1912, 1931-1939 und 1952-1960.* Mainz am Rhein: P. von Zabern.

Dupré, S. (1984). *Porsuk I. La céramique de l' Âge du Bronze et de l'Âge du Fer.* Paris: Recherche sur les Civilisations.

Genz, H. (2011). The Iron Age in Central Anatolia. In G. R. Tsetskhladze (Ed.), *The Black Sea, Greece, Anatolia and Europe in the First Millennium BC*, (pp. 331-368). Leuven, Belgium; Paris, France; Walpole, MA, USA: Peeters.

Kealhofer, L., Grave, P., Genz, H., and Marsh, B. (2009). Post-collapse: The Re-Emergence of Polity in Iron Age Boğazköy, Central Anatolia. *Oxford Journal of Archaeology*, 28(3), 275–300.

Matson, F. R. (1943). Technological Notes on the Pottery. In N. Toll (Ed.), *The Green Glazed Pottery, The Excavations of Dura Europos. Final Report 4, Part l, Fascicle I*, (pp. 81-95). New Haven: Yale University Press.

Matsumura, K. (2000). On the Manufacturing Techniques of the Iron Age Ceramics from Kaman-Kalehöyük. *Anatolian Archaeology Studies*, 9, 119-131.

Matsumura, K. (2001). On the Manufacturing Techniques of the Iron Age Ceramics from Kaman-Kalehöyük (II): The Cultural Influence of Phrygia at Kaman-Kalehöyük. *Anatolian Archaeology Studies*, 10, 101-110.

Matsumura, K. (2005). *Die Eisenzeitliche Keramik in Zentralanatolien aufgrund der Grundlage der Ausgrabung von Kaman-Kalehöyük*. Freien Universität Berlin. Unpublished Ph.D. thesis.

Mikami, T., & Omura, S. (1987). 1985 Yılı Kaman-Kalehöyük Yüzey Araştırmaları. *Araştırma Sonuçları Toplantısı*, IV, 227-237.

Omura, M. (2008). Archaeological Surveys at Yassıhöyük. *Anatolian Archaeology Studies*, 17, 97-170.

Omura, M. (2013). Yassıhöyük Kazılari 2011. *Kazı Sonuçları Toplantısı*, 34(1), 313-322.

Omura, M. (2015). Yassıhöyük Kazılari 2013. *Kazı Sonuçları Toplantısı*, 36(2), 301-312.

Omura, M. (2016a). Yassıhöyük Excavations First Five Seasons 2009-2013. *Anatolian Archaeology Studies*, 19, 11-72.

Omura, M. (2016b). Yassıhöyük Kazıları. *Kırşehir Arkeoloji ve Paleoantoloji Çalışmaları*, (pp.31-51). Ankara, Turkey: Tayfunmedya.

Ökse, T. (2011). *Önasya Arkeolojisinde Çanak Çömlek*. Istanbul: Arkeoloji ve Sanat Yayınları.

Parzinger, H. & Sanz, R. (1992). *Die Oberstadt von Ḫattuša. Hethitische Keramik aus dem zentralen Tempelviertel. Funde aus den Grabungen, 1982-1987*. Berlin: Gebr.Mann Verlag.

Rice, P. M. (1987). *Pottery Analysis: A Source Book*. Chicago: University of Chicago Press.

Sams, G. K. (1994). *The Gordion Excavations, 1950-1973, Final Reports, Volume IV, Text & Illustration, The Early Phrygian Pottery (University Museum Monograph 79)*. Philadelphia: University of Pennsylvania Museum of Archaeology and Anthropology.

Sams, K. G. (2011). Anatolia: The First Millennium B.C.E. in Historical Context. In S. R. Steadman and J. G. McMahon (Eds.), *The Oxford Handbook of Ancient Anatolia (10,000-323 BCE)*, (pp 604-622). Oxford: Oxford University Press.

Sayhan, S. (2006). Kırşehir İl Merkezindeki Jeotermal Suların Fiziksel ve Kimyasal Özelliklerinin Zamana Bağlı Olarak Değişimlerinin İncelenmesi ve Coğrafi Açıdan Önemi. *İstanbul Üniversitesi Edebiyat Fakültesi Coğrafya Bölümü Coğrafya Dergisi,* 14, 76-93.

Sinapoli, C.M. (1991). *Approaches to Archaeological Ceramics*. New York: Springer Science+Business Media, LLC.

Summers, G. D. (2009). Between Urartu and Phrygia: the North-Central Anatolian Plateau in the Iron Age. In H. Sağlamtimur, E. Abay, Z. Derin, A.Ü. Erdem, A. Batmaz, F. Dedeoğlu, M. Erdalkıran, M.B. Baştürk and E. Konakçı (Eds.), *Studies in Honour of Altan Çilingiroğlu: a life dedicated to Urartu on the shores of the Upper Sea*, (pp. 657-671). Istanbul: Arkeoloji ve Sanat.

Velde, B. & Druc, I. C. (1999). *Archaeological Ceramic Materials, Origin and Utilization*. Berlin: Springer.

Voigt, M. & Henrickson, R. (2000). Formation of the Phrygian State: The Early Iron Age at Gordion. *Anatolian Studies*, 50, 37-54.

Weeden, M. (2013). YH150318: a Potsherd Inscribed with Hieroglyphs. *Anatolian Archaeology Studies*, 20, 13-16.

Weeden, M. (2017). A Probable Join to the "Kırşehir Letter". *Anatolian Archaeology Studies*, 18, 15-18.

Young, R.S. (1981). *The Gordion Excavations Final Reports I: Three Great Early Tumuli, University Museum Monograph 43*. Philadelphia: University Museum.

# TABLES

| Depart | Destination | Distance (by car) | Distance (by walking) |
|---|---|---|---|
| YH | **Halys River**<br>-via Sıdıklı köyü iç yolu- | **43.6 km**<br>**38 min** | **39.2 km**<br>**8h 8min** |
| YH | **Kaman-Kalehöyük**<br>-via D260- | **33.3 km**<br>**31 min** | **27.2 km**<br>**5h 27min** |
| YH | **Boğazköy** | **114 km**<br>**1h 55min**<br>-via İbikli, Çiçekdağ, Biçikler- | **109 km**<br>**22h 44 min** |
| YH | **Alişar Höyük** | **145 km**<br>**2h 30min**<br>-via Yalnızağaç- | **123 km**<br>**25 h** |
| YH | **Gordion** | **215 km**<br>**2h 48min** | **216 km**<br>**45 h** |
| YH | **Porsuk** | **250 km**<br>**3h 1 min**<br>-via Aksaray- | **233 km**<br>**47 h**<br>-via Ortaköy, Çekiçler, Zengen- |

Table 1. Distances between Yassıhöyük and other main sites in Central Anatolia

| Structures | Trench-Provisional layer (PL) | Iron Age-Painted | Iron Age-Plain | Iron Age | Periods earlier than Iron Age | Total Number of Sherds | Total Number of Sherds for Drawing |
|---|---|---|---|---|---|---|---|
| **P78** | E8/d8-YH13 PL25-YH14 PL 63 | 4 | 31 | 35 | 73 | 108 | 28 |
| **P74** | E8/d8-PL19 | 4 | 6 | 10 | 18 | 34 | 5 |
| **P87** | E8/d8-PL28 | 14 | 62 | 76 | 106 | 182 | 51 |
| **R65-Ins 14** | E8/d8-PL65 | 8 | 16 | 24 | 13 | 37 | 14 |
| **R59** | E8/d8-PL34 | 40 | 147 | 187 | 157 | 344 | 164 |
| | E8/d8-PL47-48-49 | 18 | 96 | 114 | 247 | 343 | 70 |
| **P41** | E8/d9-PL34 | 15 | 62 | 77 | 153 | 230 | 43 |
| **R33** | E8/d9-PL36-E8/d8-PL 54 | 1 | 7 | 8 | 64 | 72 | 8 |
| **P34** | E9/f10-PL60-61-62 | 57 | 74 | 131 | 145 | 407 | 73 |
| **Total:** | | 161 | 501 | **662** | 976 | 1757 | **456** |

Table 2. Distribution of sherds from the MIA features in Yassıhöyük

| | Form Type | WareType1 (Red/Reddish Brown Wares) | WareType2 (Pale Reddish Wares) | WareType1 (Cream Wares with grey core) | WareType1 (Cream Wares with orange core) | WareType1 (Grey/Black Wares) |
|---|---|---|---|---|---|---|
| Bowl with plain rim | BP | B1 | B2 | B3 | B4 | B5 |
| Bowl with flaring rim | BF | F1 | F2 | F3 | F4 | F5 |
| Round-mouthed Jug | RJ | R1 | R2 | R3 | R4 | R5 |
| Pinched-mouthed Jug | PJ | P1 | P2 | P3 | P4 | P5 |
| Cooking Pots | CE, CV, CI | C1 | C2 | C3 | C4 | C5 |
| Kraters | K | KR1 | KR2 | KR3 | KR4 | KR5 |
| Pithoi | P | PT1 | PT2 | PT3 | PT4 | - |

Table 3. Main ware types according to vessel forms

| Stratigraphy | Deposit | WareType1 Red/ Reddish Brown Wares | WareType2 Pale Reddish Wares | WareType3 Cream Wares with Grey Core | WareType4 Cream Wares with Orange Core | WareType5 Black/Grey Wares | Total |
|---|---|---|---|---|---|---|---|
| I-9 | P34 | 85 | 5 | 4 | 31 | 6 | 131 |
| | P41 | 57 | 2 | 5 | 5 | 8 | 77 |
| I-9/I-10 | P74 | 8 | - | 1 | - | 1 | 10 |
| | P87 | 58 | 3 | 7 | 7 | 1 | 76 |
| | P78 | 26 | - | 4 | 5 | - | 35 |
| I-10 | R65 | 16 | 2 | 3 | 3 | - | 24 |
| I-11 | R33 | 7 | 1 | - | - | - | 8 |
| | R59 | 215 | 16 | 36 | 19 | 15 | 301 |

Table 4. Frequency analysis of ware types for MIA features

| Stratigraphy | Deposit | WareType1 Red/ Reddish Brown Wares | WareType2 Pale Reddish Wares | WareType3 Cream Wares with Grey Core | WareType4 Cream Wares with Orange Core | WareType5 Black/Grey Wares | Total |
|---|---|---|---|---|---|---|---|
| I-9 | P34 | 68.3 | 3.4 | 4.3 | 17.3 | 6.8 | 208 |
| | P41 | | | | | | |
| I-9/I-10 | P74 | 76 | 2.5 | 9.9 | 9.9 | 1.7 | 121 |
| | P87 | | | | | | |
| | P78 | | | | | | |
| I-10 | R65 | 66.6 | 8.3 | 12.5 | 12.5 | - | 24 |
| I-11 | R33 | 71.8 | 5.5 | 11.6 | 6.15 | 4.9 | 309 |
| | R59 | | | | | | |

Table 5. Frequency analysis of ware types for MIA phases

| KL-Type | Samples | YH-Type | Form | Fabric | Similar KL samples (Matsumura, 2005) |
|---|---|---|---|---|---|
| Grey Ware | YH130463<br>YH130437 | WareType5 / B5 | BP3 | G-C+M | Pl. 111 (IIc2-3) |
| | YH130445<br>YH110625<br>YH110626<br>YH110629<br>YH110630 | WareType5 / B5 | BP9 | G | Pl.112 (IIc2-3) |
| | YH130374<br>YH130455 | WareType5 / B5 | BP9 | G | Pl. 231 (IIa1-2) |

| | | | | | |
|---|---|---|---|---|---|
| **Grey Burnished Ware** | YH130411<br>YH130446 | WareType5 / B5 | BP9 | G-G | Pl. 69 (IId1-3) |
| **Fine Black Burnished Ware** | YH130415<br>YH130424<br>YH130454<br>YH130497 | WareType5 / B5 | BP9 | G | Pl. 69 (IId1-3), Pl. 108 (IIc2-3) |
| **Medium Black Burnished Ware** | YH110199<br>YH110510<br>YH130397 | WareType5 / F5 | BF2, BF4 | G | Pl. 118-9 (IIc2-3) |
| | YH110521 | WareType5 / R5 | RJ3d | G-g | Pl. 102 (IId1-3) |
| | YH130344<br>YH130468<br>YH130525 | WareType5 / K5 | K1e, K2c | G-G+L | Pl. 135 (IIc2-3), Pl. 210 (IIa3-5) |
| **Plumbeous Ware** | YH130322<br>YH130500 | WareType5 / B5 | BP9 | G-G | Pl. 114 (IIc2-3), Pl. 151 (IIa6-IIc1) |
| **Gold Wash Ware** | YH130329 | WareType5 /B4 | BP8 | O-M | Pl. 70 (IId1-3), Pl. 154 (IIa6-IIc1) |

Table 6. Comparative types from Yassıhöyük and Kaman-Kalehöyük

# FIGURES

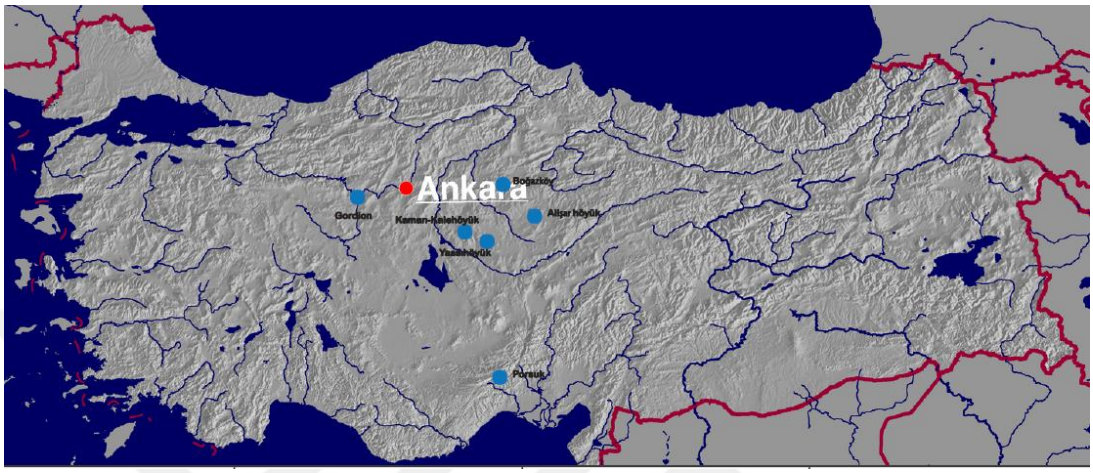


Figure 1. Yassıhöyük and other main sites in Turkey (adapted from ginkgomaps.com)

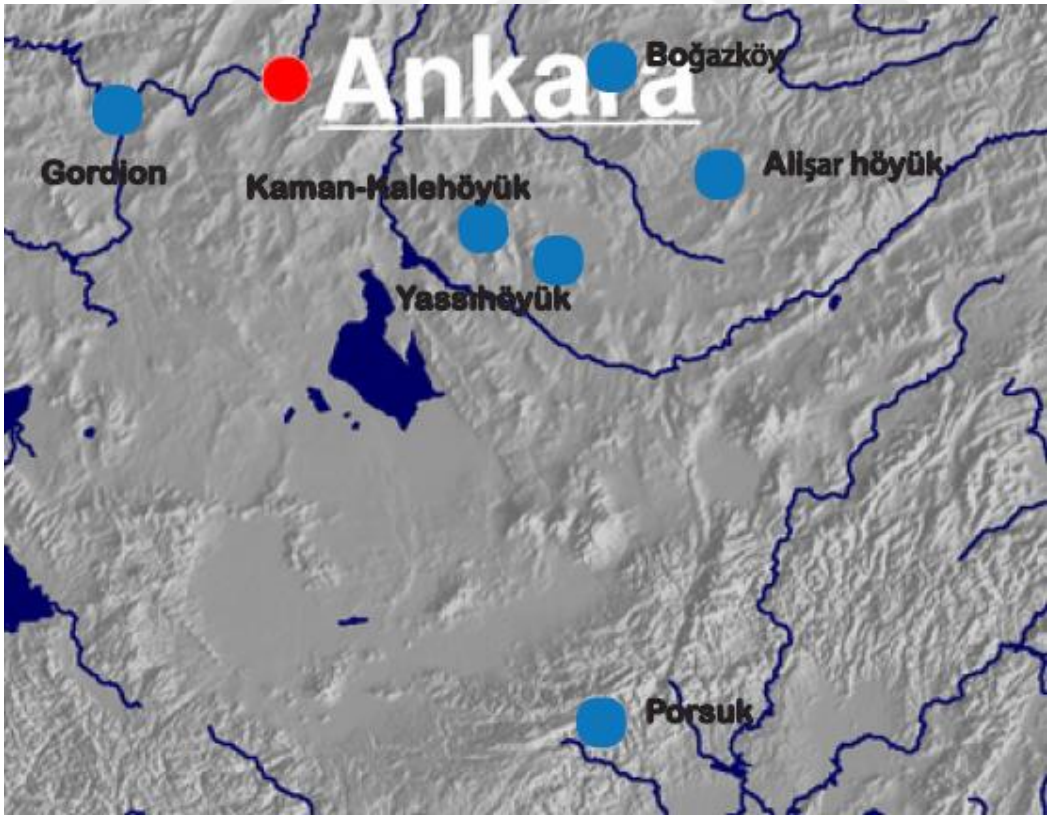


Figure 2. Yassıhöyük and other sites in Central Anatolia (adapted from ginkgomaps.com)

Figure 3. Aerial view of Yassıhöyük: the triangle shows the excavation area (Omura, 2008: Fig. 2)

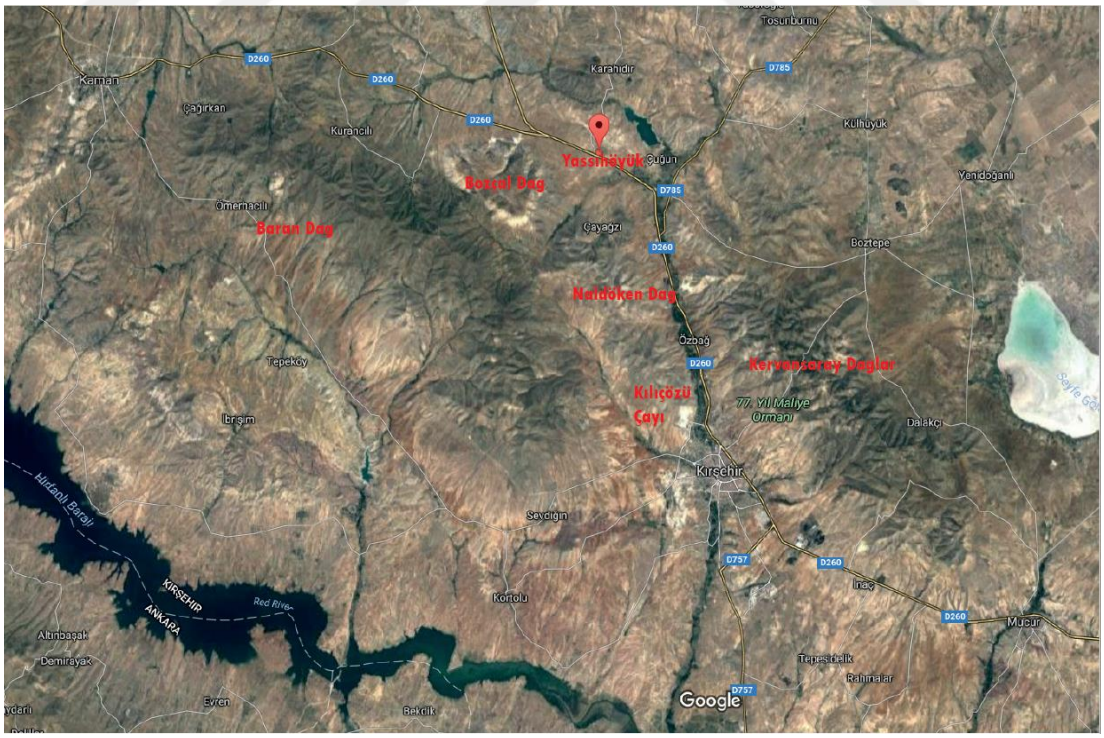


Figure 4. The geographic landscape around Yassıhöyük (adapted from Google Maps)

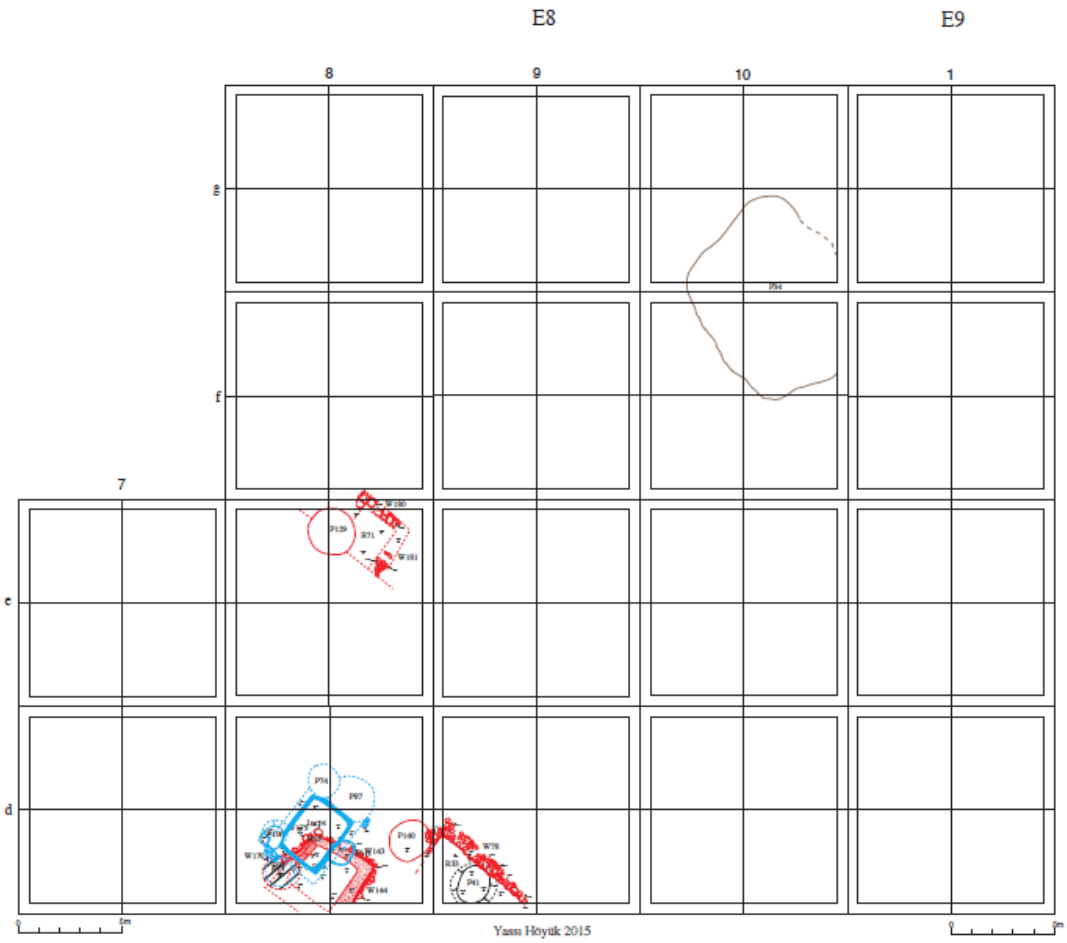


Figure 5. MIA deposits according to the grid plan (adapted from the excavation digital drawings of Yassıhöyük)

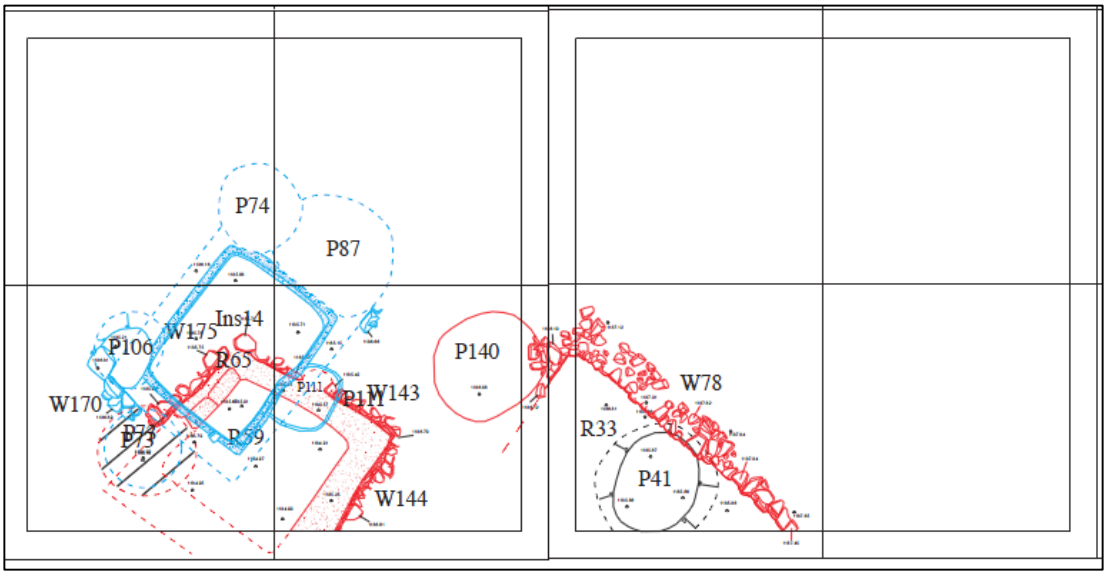


Figure 6. MIA deposits in the trenches E8/d8 (left) and E8/d9 (right)

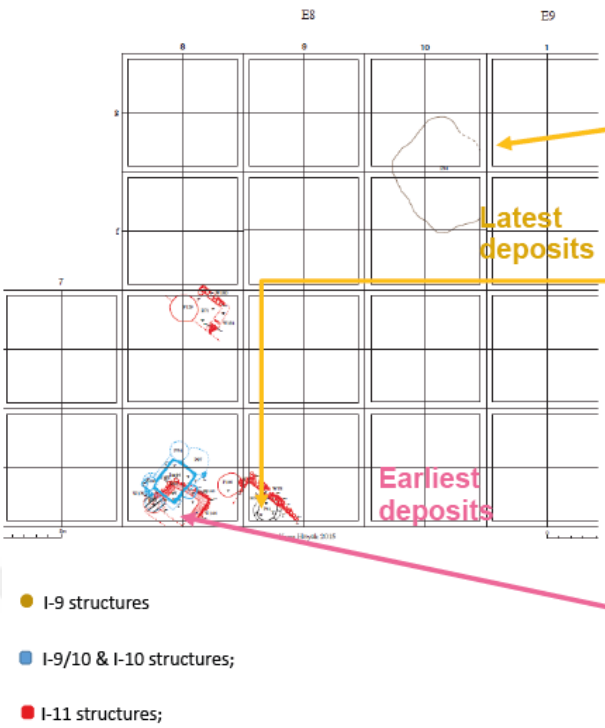


| Deposit | Season | Trench | Provisional Layer | Structure Phase |
|---|---|---|---|---|
| P41 | YH11 | E8/d9 | 34 | I-9 |
| P34 | YH11 | E8/f10 | 60 | I-9 |
| | YH12 | E8/g10 | 44-45 | I-9 |
| P74 | YH13 | E8/d8 | 19 | I-9/I-10 |
| P78 | YH13 | E8/d8 | 25 (I.floor) | I-9/I-10 |
| | YH14 | E8/d8 | 63 (II.floor) | I-9/I-10 |
| P87 | YH13 | E8/d8 | 28 | I-9/I-10 |
| R65-Ins14 | YH13 | E8/d8 | 37 | I-10 |
| R59 | YH13 | E8/d8 | 34-47-48-49 | I-11 |
| R33 | YH11 | E8/d9 | 36 | I-11 |
| | YH13 | E8/d8 | 54 | I-11 |

Figure 7. Chronological order of the MIA deposits (adapted from the excavation digital archive of Yassıhöyük)

Figure 8. Main classes for typology

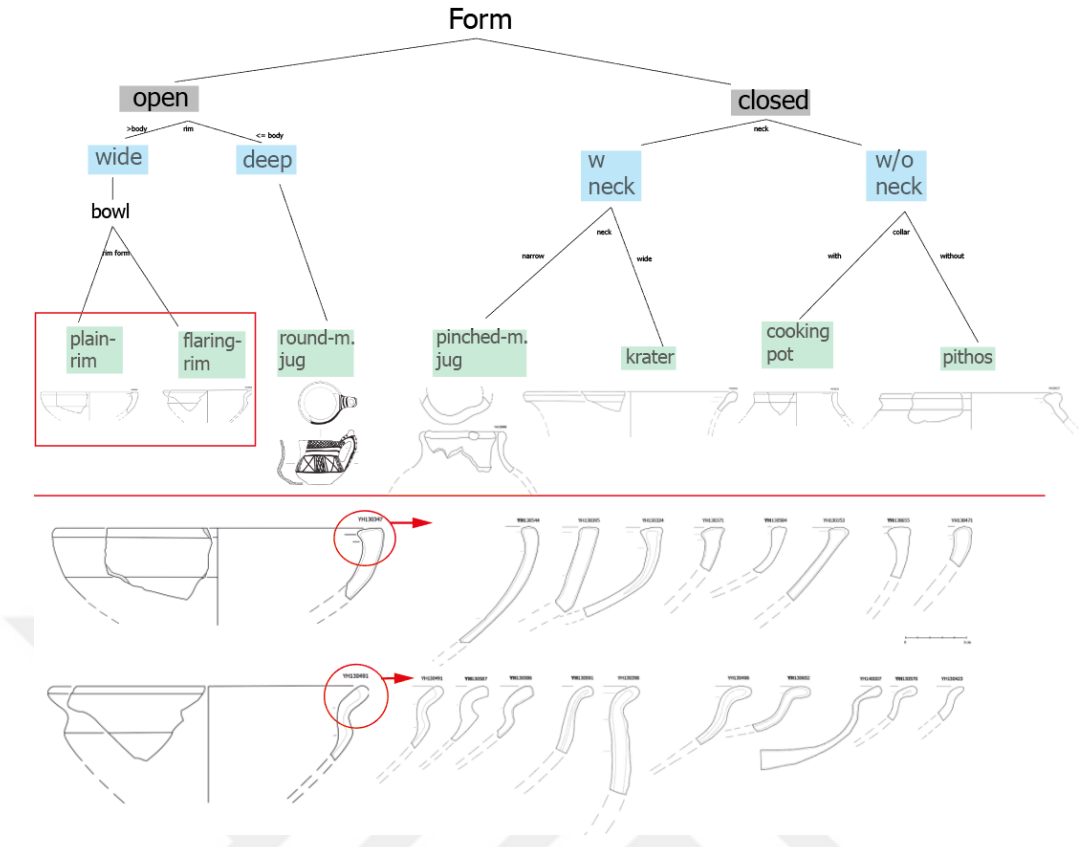


Figure 9. Bowl forms with plain rim (BP) and flaring rim (BF)

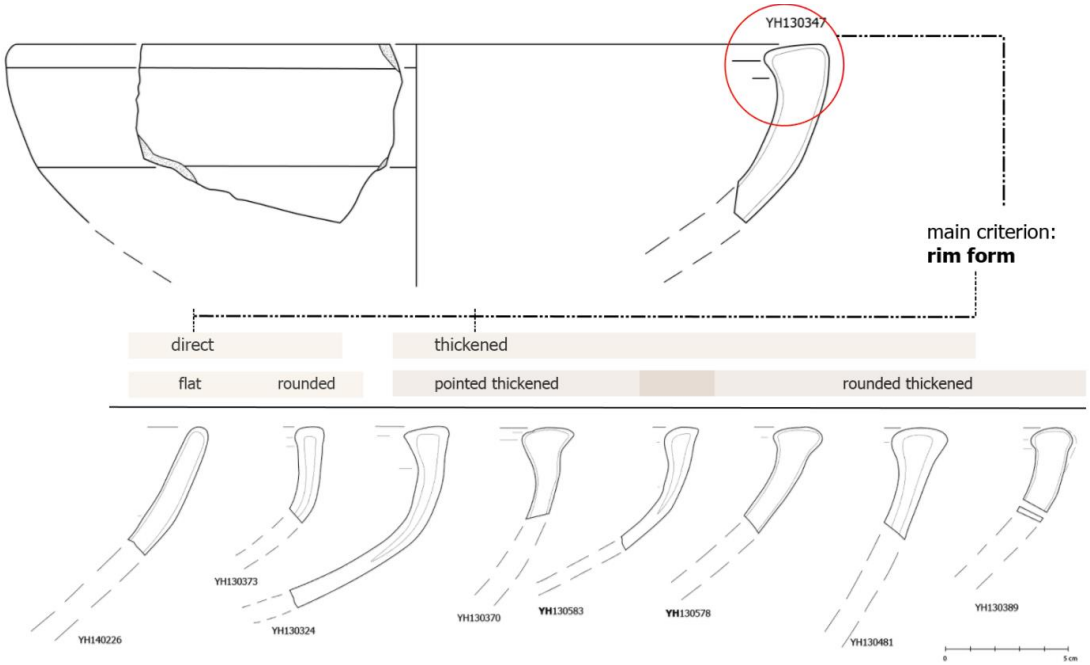


Figure 10. Bowl forms with plain rim (BP)

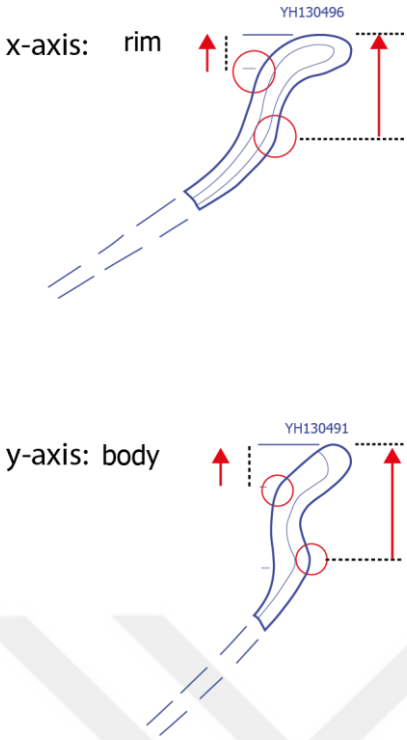


Figure 11. Measurements for x- and y-axis on bowls with flaring rim (BF)

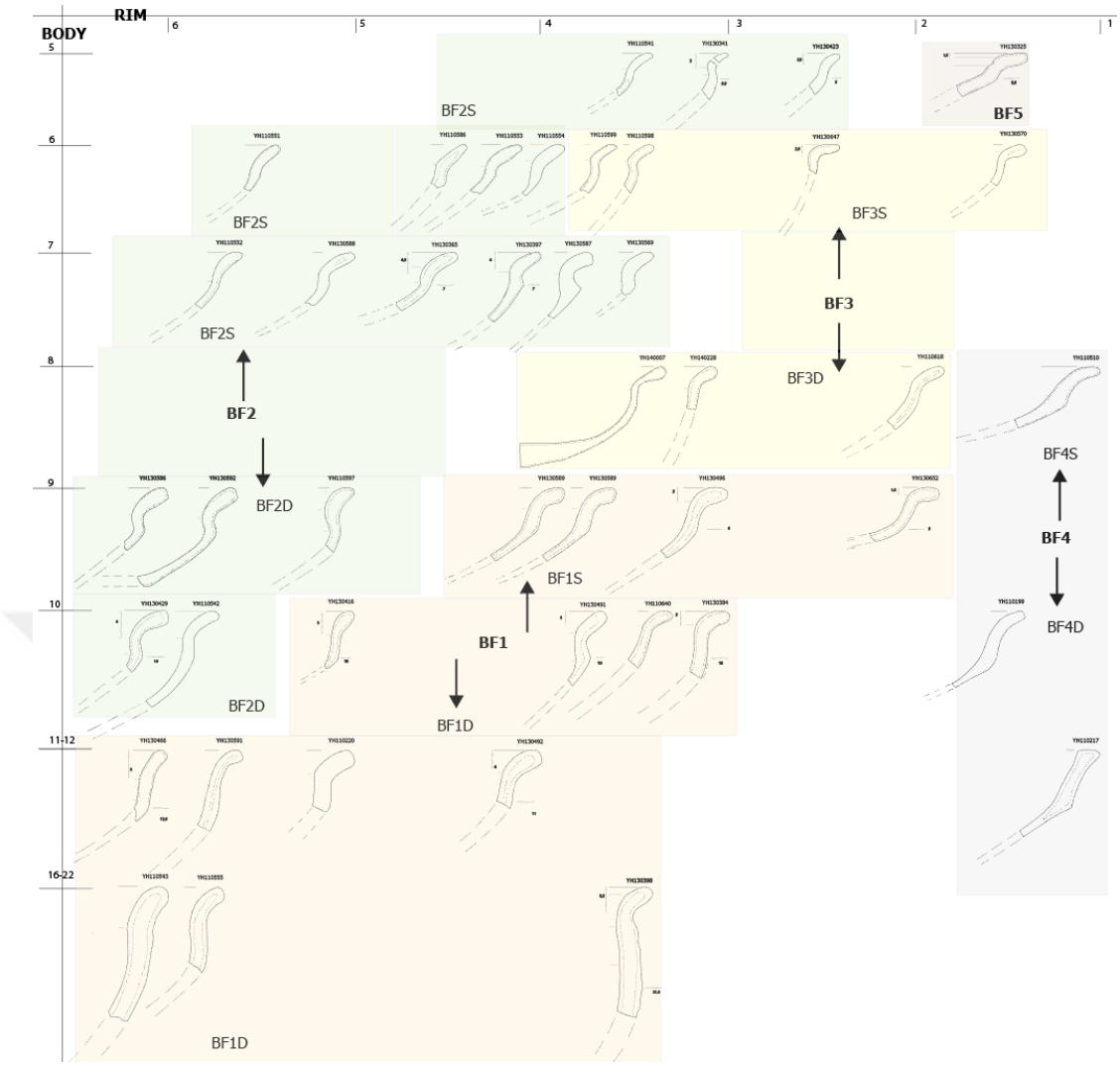


Figure 12. Bowl forms with flaring rim (BF)

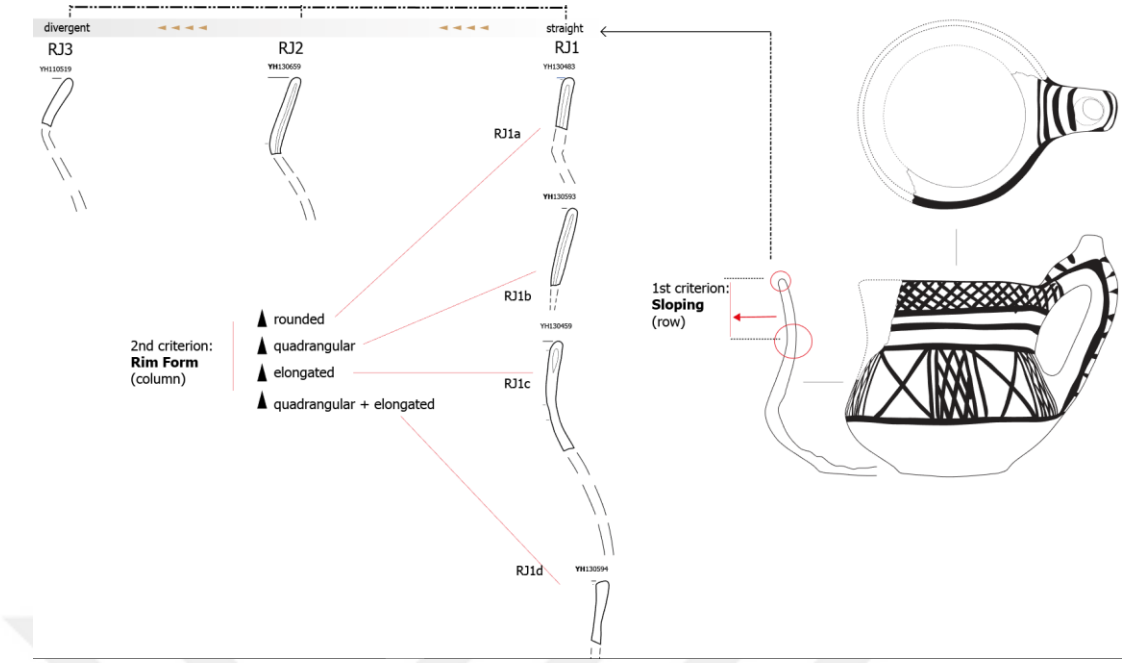


Figure 13. Jug forms with round mouth (RJ)

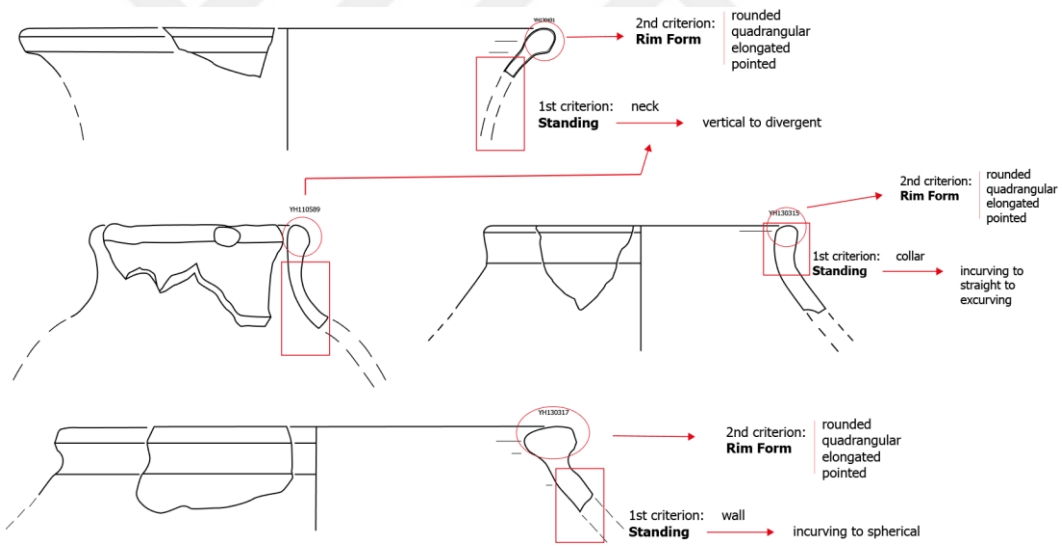


Figure 14. Closed vessels

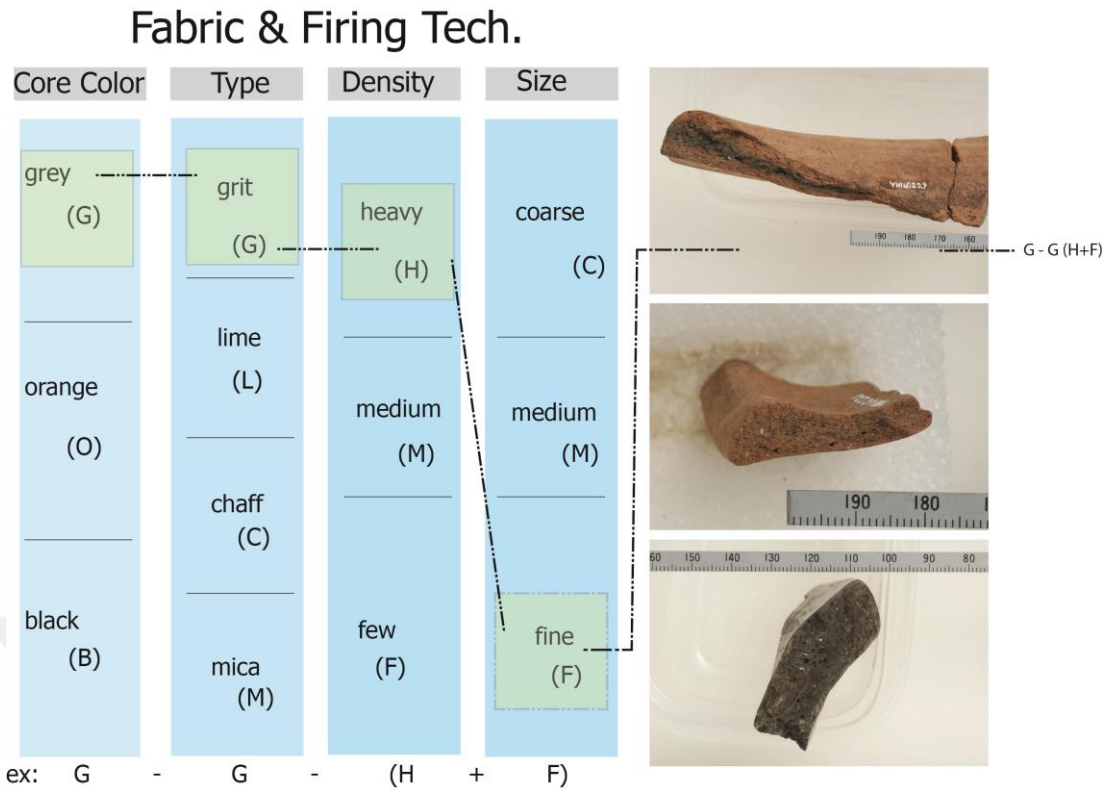


Figure 15. Categories for fabric and firing technique

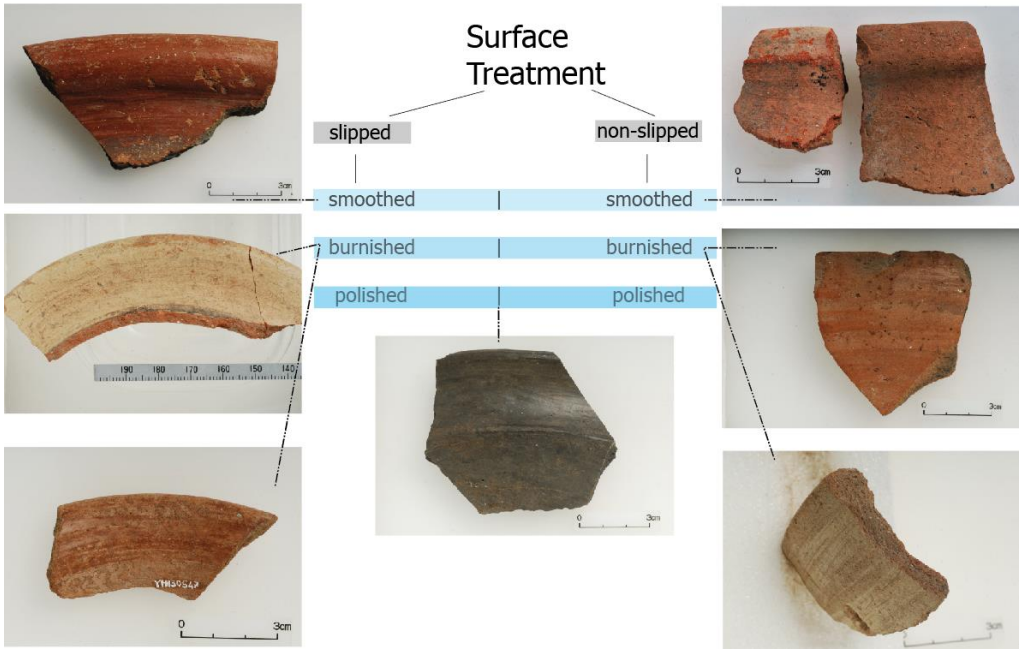


Figure 16. Categories for surface treatment

Figure 17. Bowl types with plain rim (B1, B2, B3, B4 and B5)

Figure 18. Bowl types with flaring rim (F1, F2, F3, F4 and F5)

Figure 19. Round-mouthed jug types (R1, R2, R3, R4 and R5)

Figure 20. Pinched-mouthed jug types (P1, P2, P3, and P4)

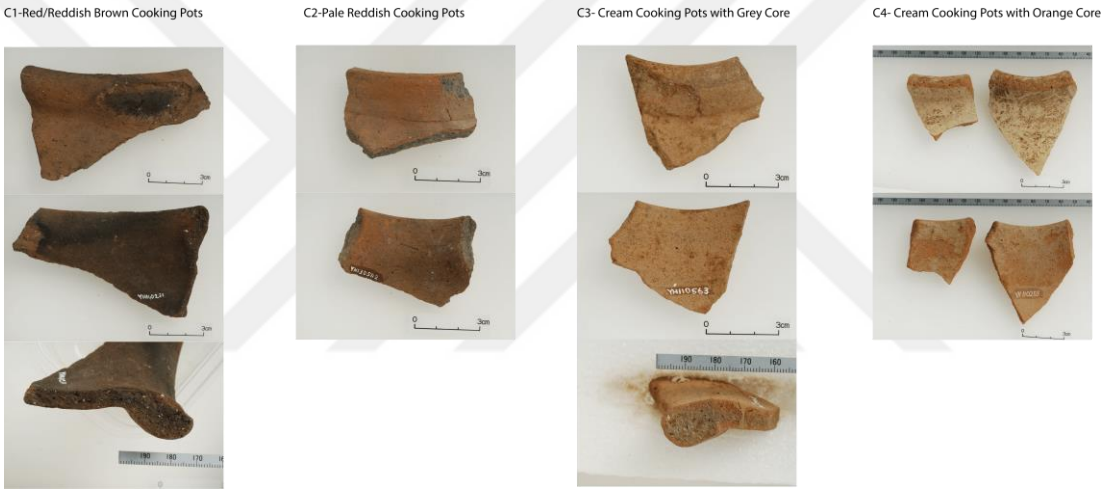


Figure 21. Cooking pot types (C1, C2, C3 and C4)

Figure 22. Krater types (KR1, KR2, KR3, KR4 and KR5)

Figure 23. Pithos types (PT1, PT2, PT3 and PT4)

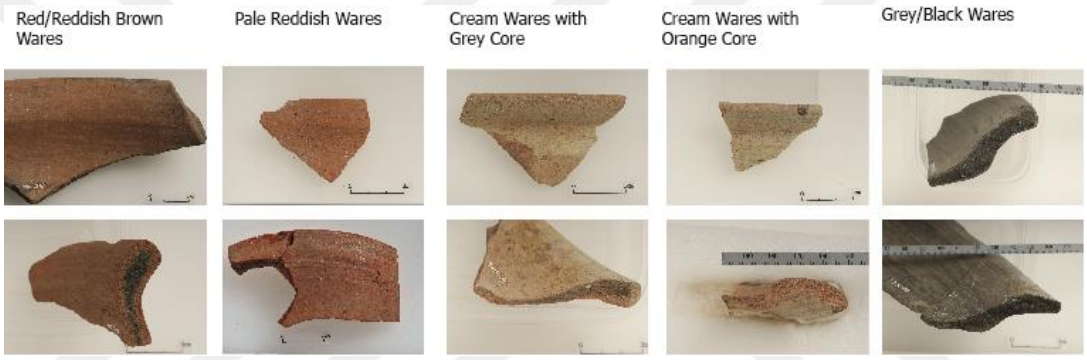


Figure 24. The YH MIA ware types

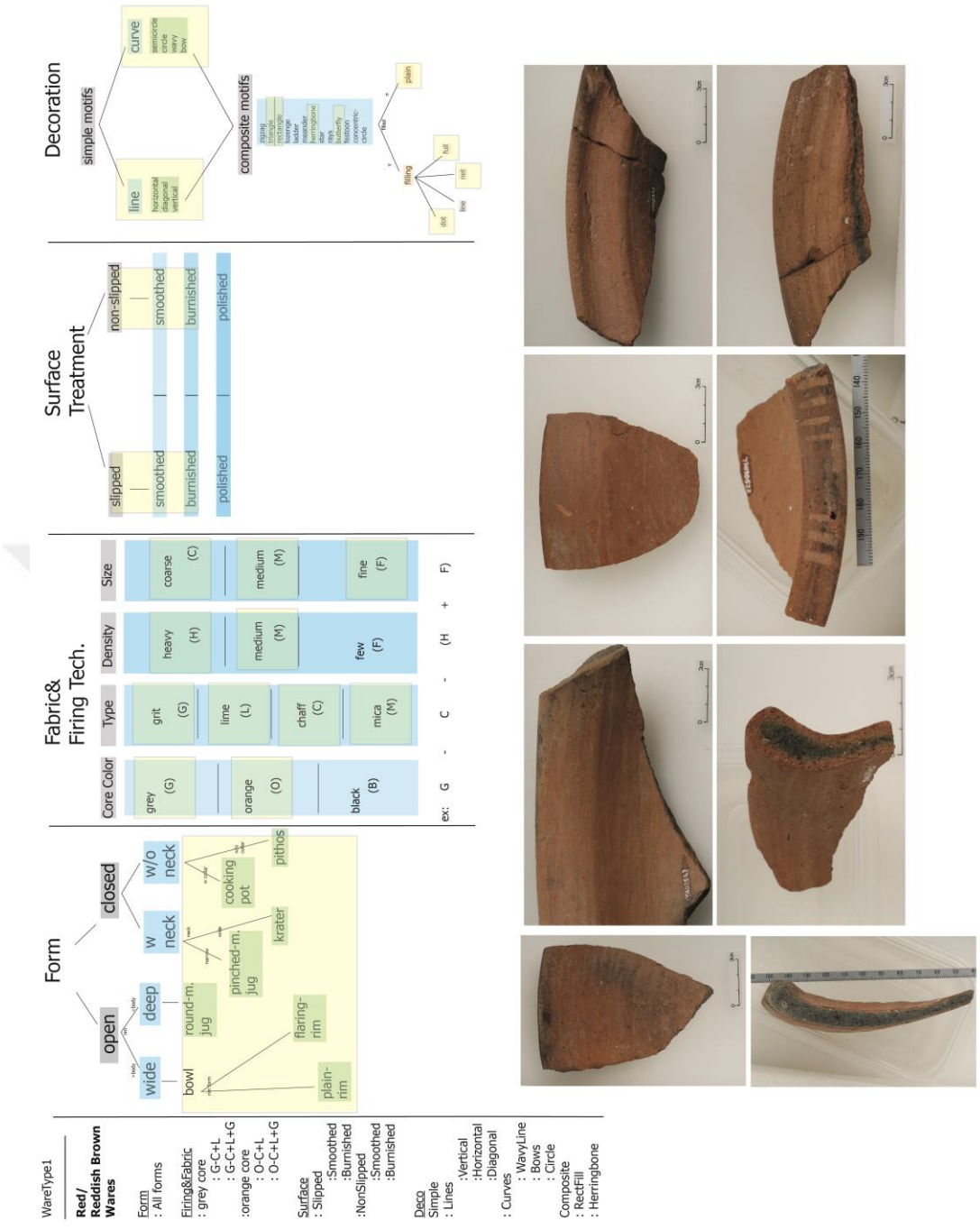


Figure 25. Red/reddish brown wares (WareType1)

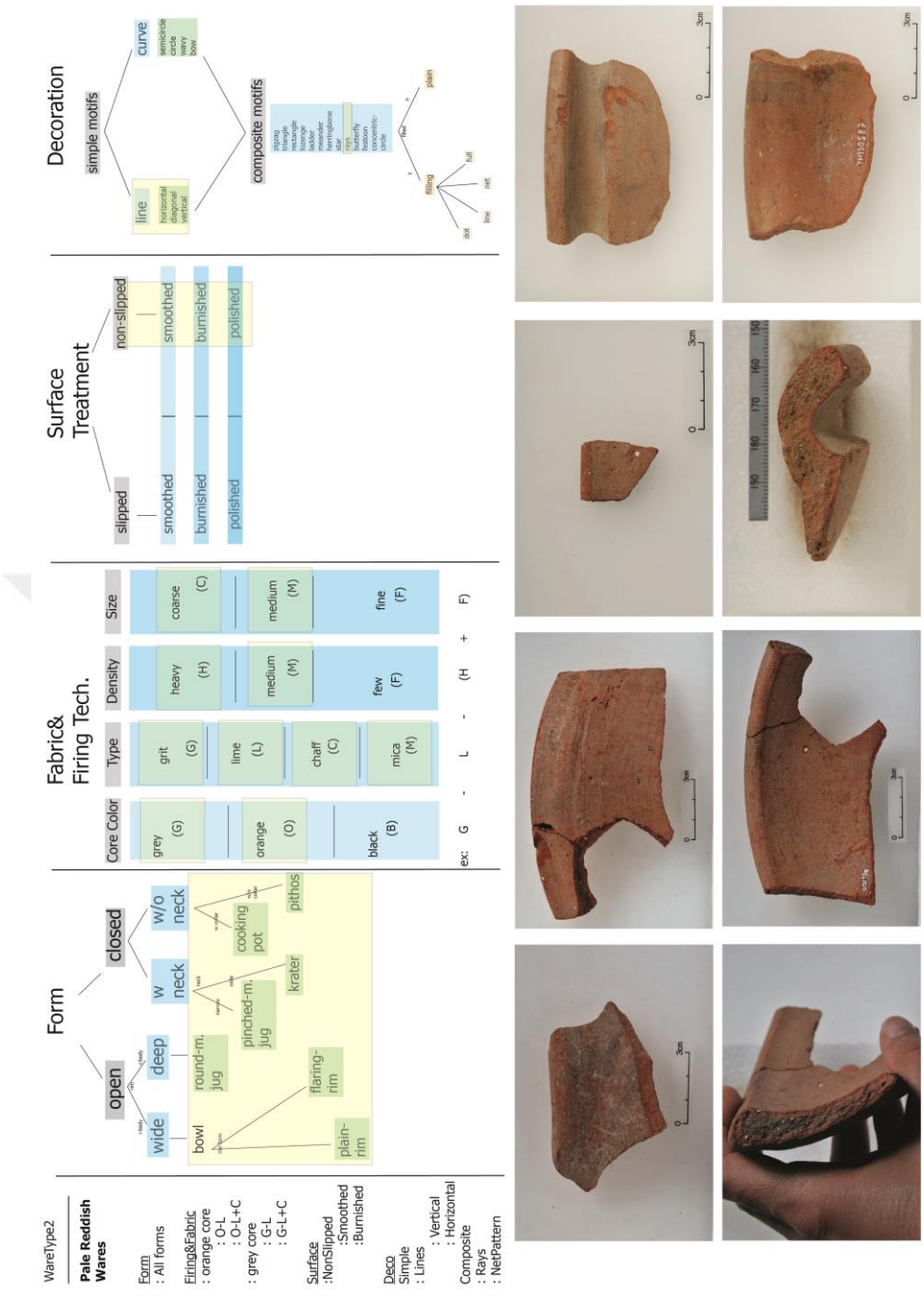


Figure 26. Pale reddish wares (WareType2)

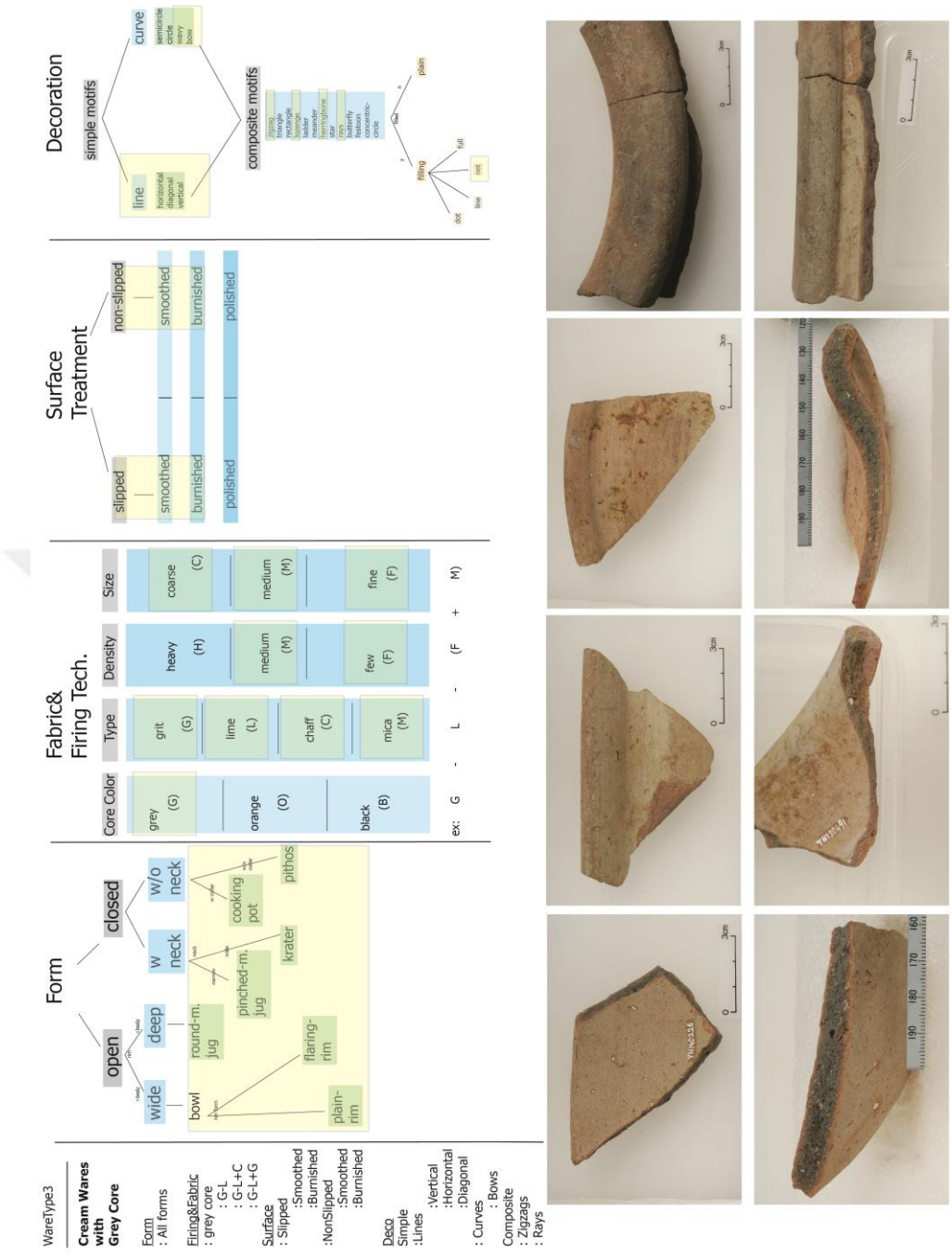


Figure 27. Cream wares with grey core (WareType3)

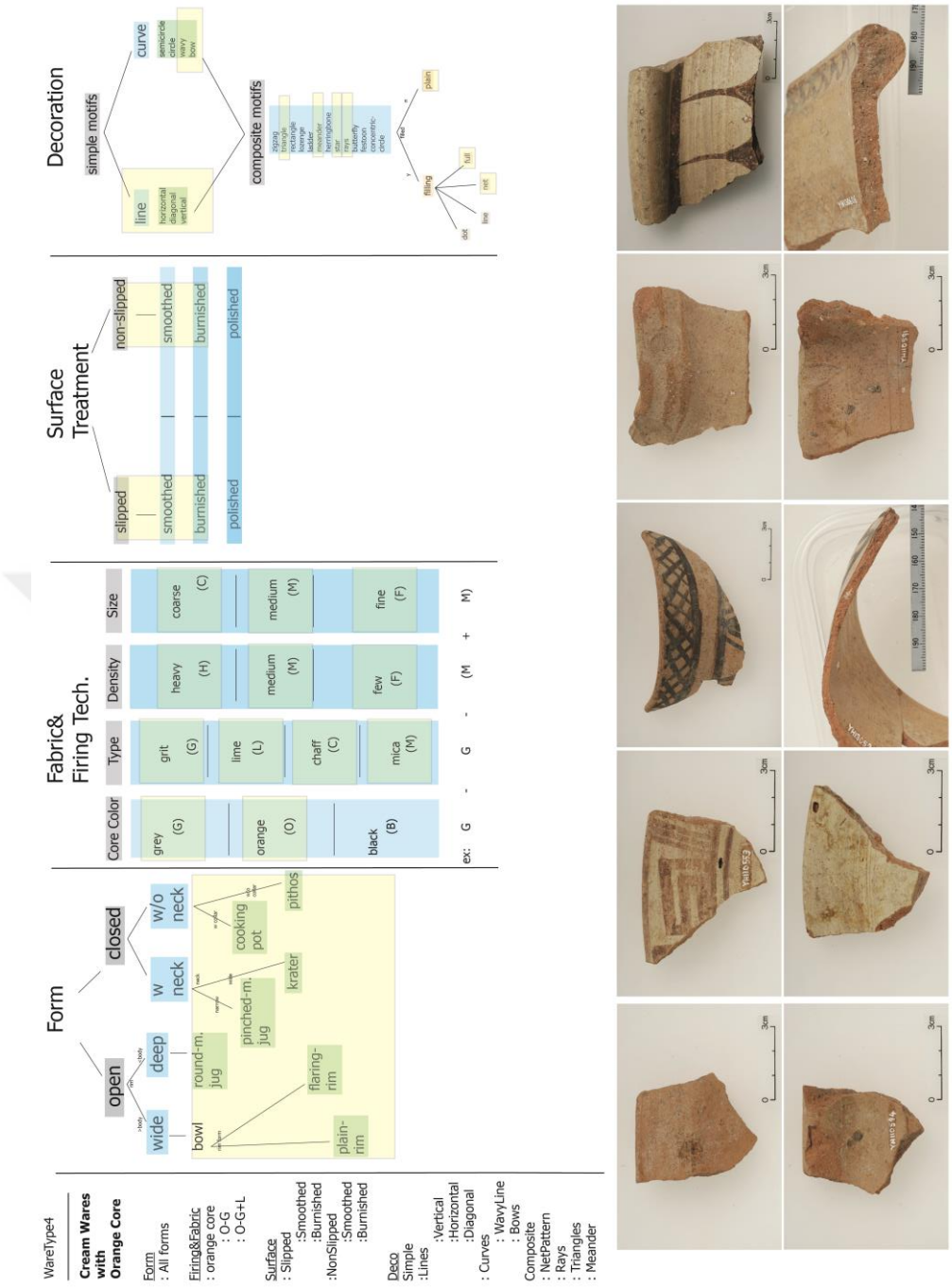


Figure 28. Cream wares with cream core (WareType4)

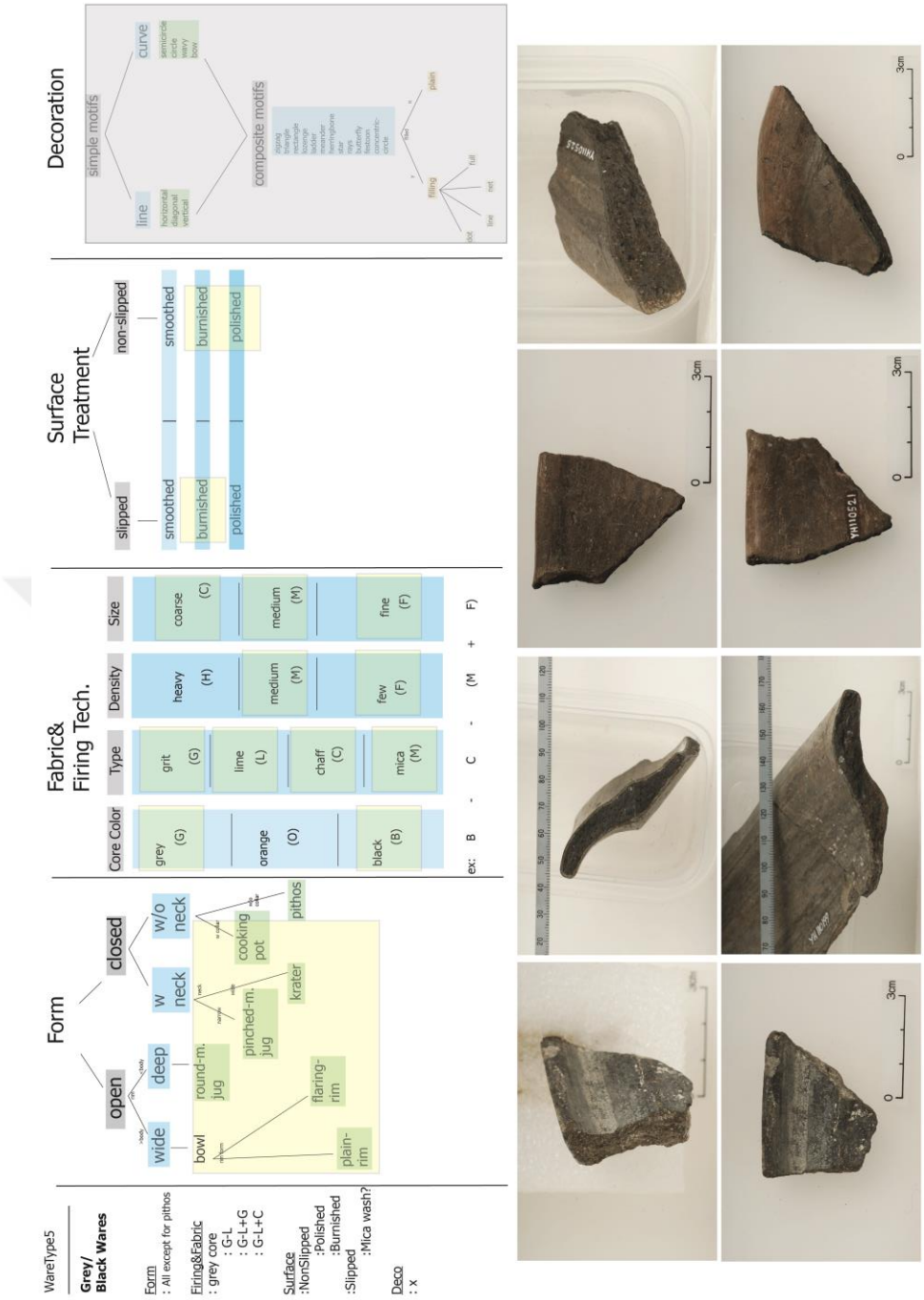


Figure 29. Grey/black wares (WareType5)

| Stratigraphy | Deposit | Red/ Reddish Brown Wares (%) | Pale Reddish Wares (%) | Cream Wares with Grey Core (%) | Cream Wares with Orange Core (%) | Black/Grey Wares (%) | Total Number of Samples |
|---|---|---|---|---|---|---|---|
| I-9 | P34 | 64.3 | 3.9 | 3.5 | 23.7 | 4.6 | 131 |
| | P41 | 74 | 2.6 | 6.5 | 6.5 | 10.4 | 77 |
| I-9/I-10 | P74 | 80 | - | 10 | - | 10 | 10 |
| | P87 | 76.3 | 3,9 | 9.2 | 9.2 | 1.3 | 76 |
| | P78 | 74.2 | - | 11.5 | 14.3 | - | 35 |
| I-10 | R65 | 66.6 | 8.3 | 12.5 | 12.5 | - | 24 |
| I-11 | R33 | 87.5 | 12.5 | - | - | - | 8 |
| | R59 | 71.4 | 5.3 | 12 | 6.3 | 5 | 301 |

Earliest ------- to ------- Latest

- WareType1: For all deposits + all layers → ✓ WareType1: local production
- WareType1, WareType2, WareType3: similar in fabric, surface treatment but different in firing? → ✓ WareType2 and WareType3: local production
- WareType4: different in fabric (grit increasing) and firing (full oxidization) → WareType4: imported or influenced by Region 2 (East Pottery Zone)?
- WareType5: sligtly different in fabric and firing → WareType5: imported or influenced by Region 1 (West Pottery Zone)?

Figure 30. Frequency analysis of MIA ware types

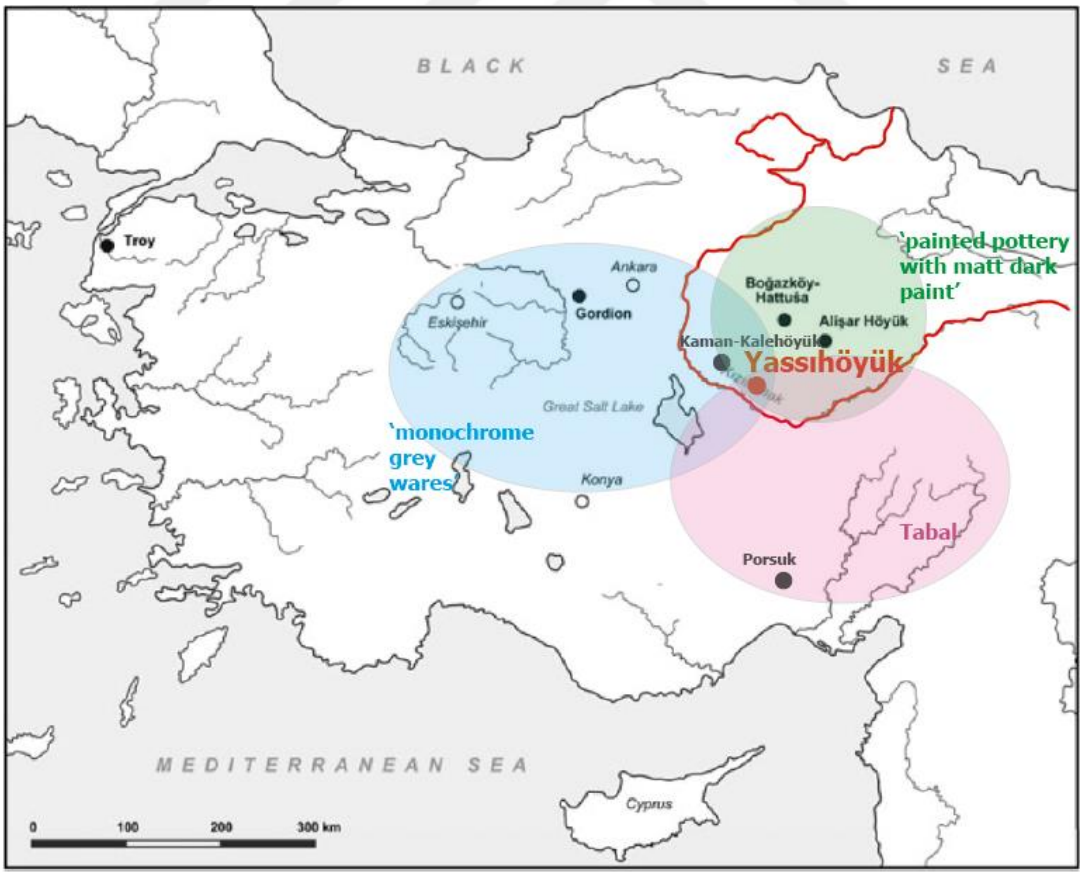


Figure 31. Pottery zones in Iron Age Central Anatolia (Kealhofer, et al. 2009: fig. 1)

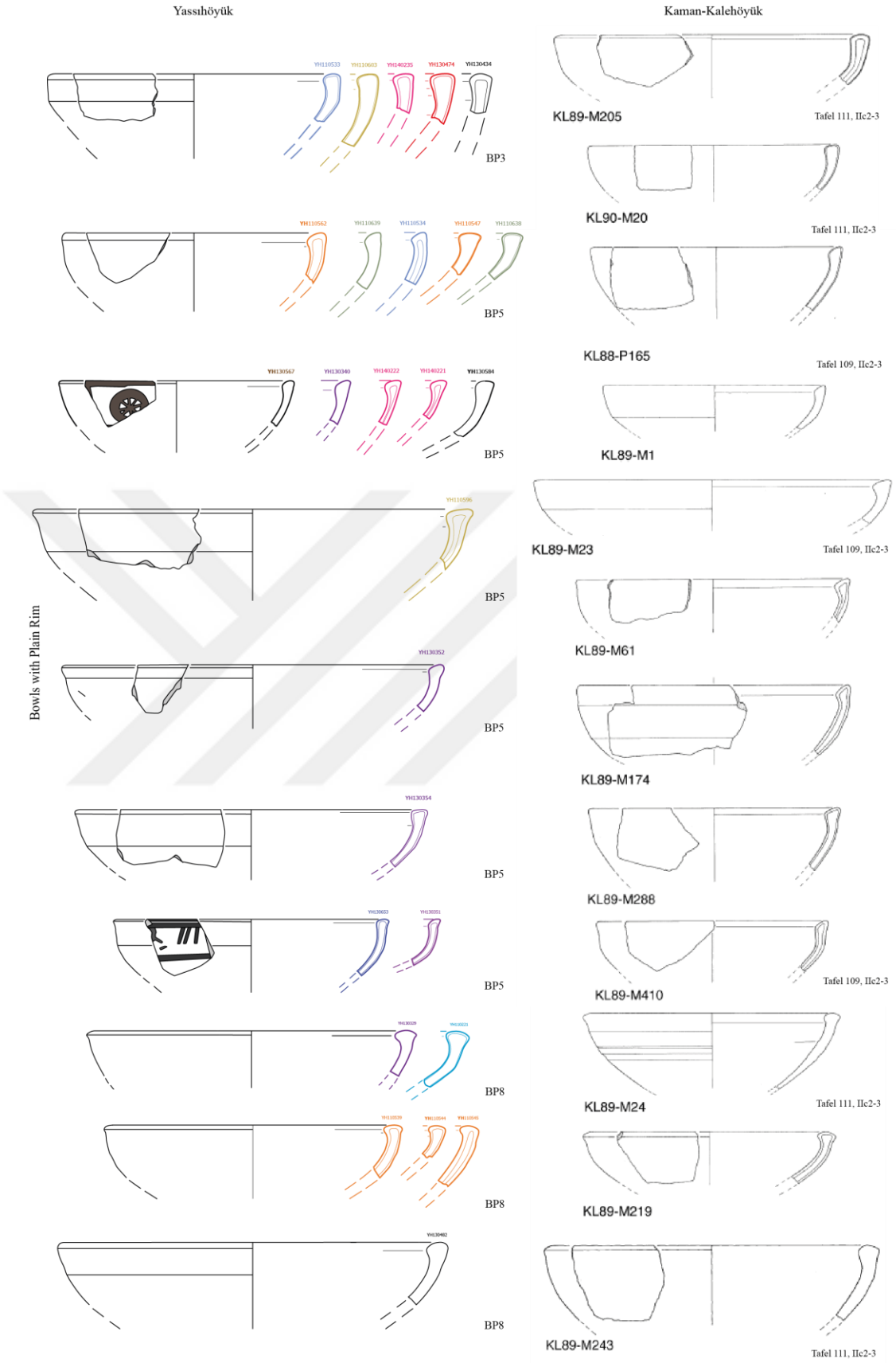


Figure 32. Bowls with plain rim (BP3, BP5, BP8) from Yassıhöyük and Kaman-Kalehöyük (Matsumura, 2005: Pl. 109, 111)

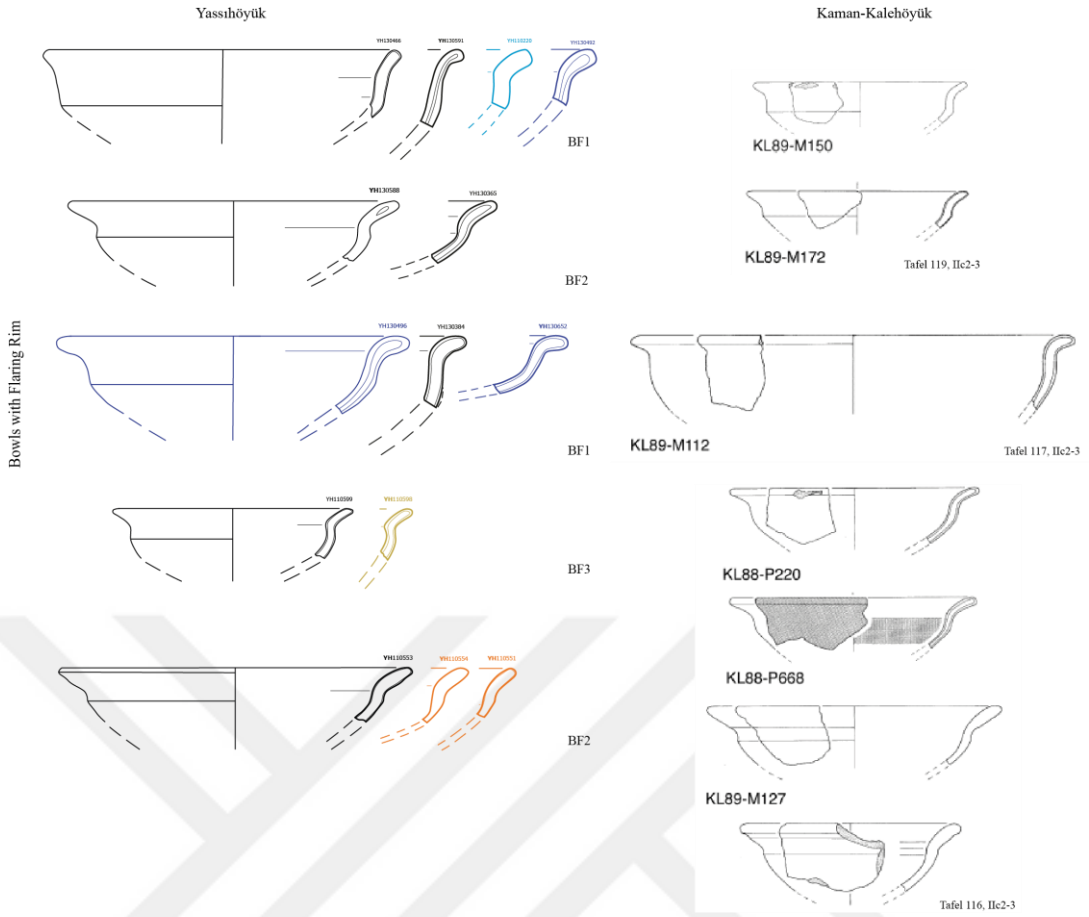


Figure 33. Bowls with flaring rim (BF1-BF3) from Yassıhöyük and Kaman-Kalehöyük (Matsumura, 2005: Pl. 116-117, 119)

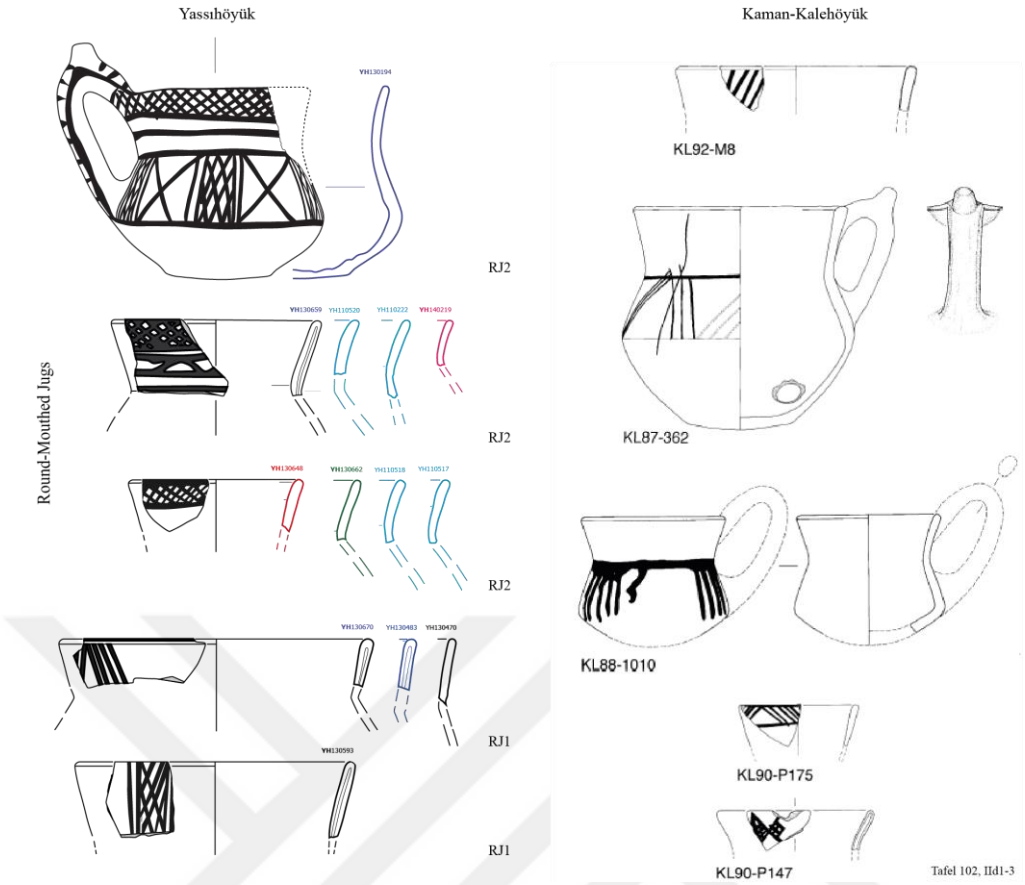


Figure 34. Round-mouthed jugs (RJ1-RJ2) from Yassıhöyük and Kaman-Kalehöyük (Matsumura, 2005: Pl. 102)

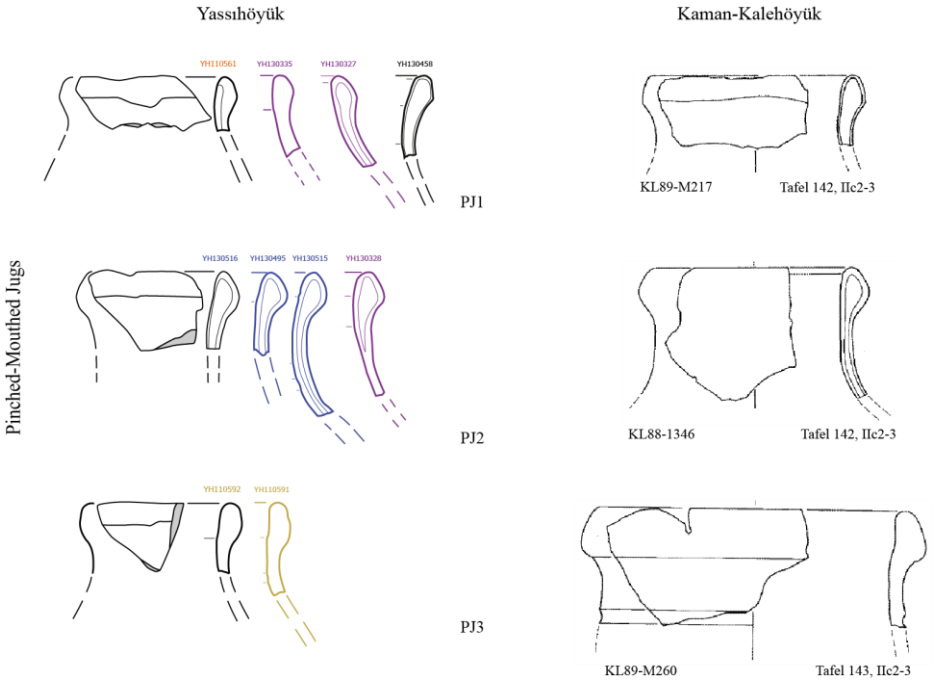


Figure 35. Pinched-mouthed jugs (PJ1-PJ3) from Yassıhöyük and Kaman-Kalehöyük (Matsumura, 2005: Pl. 142-143)

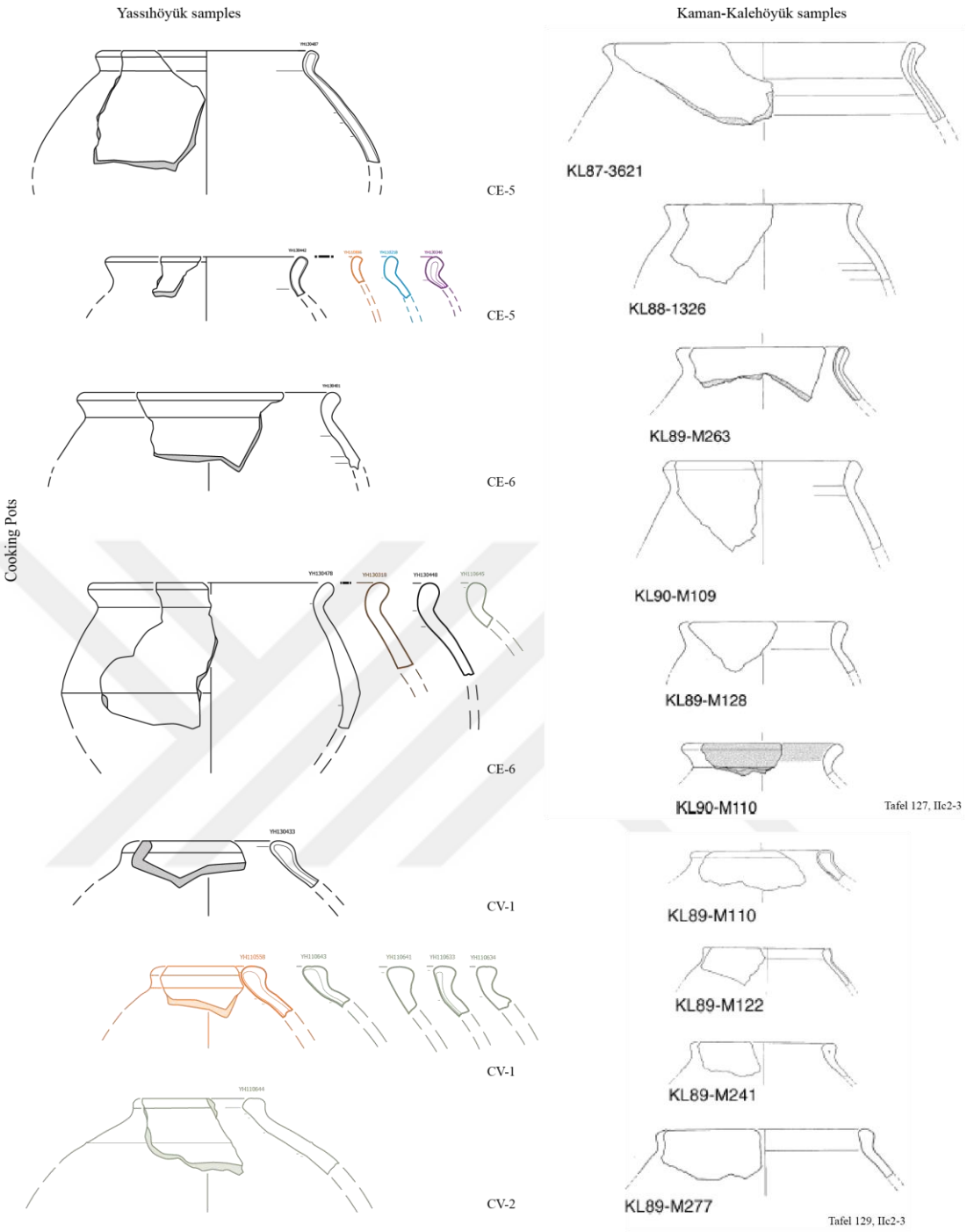


Figure 36. Cooking pots (CE-CV) from Yassıhöyük and Kaman-Kalehöyük (Matsumura, 2005: Pl. 127, 129)

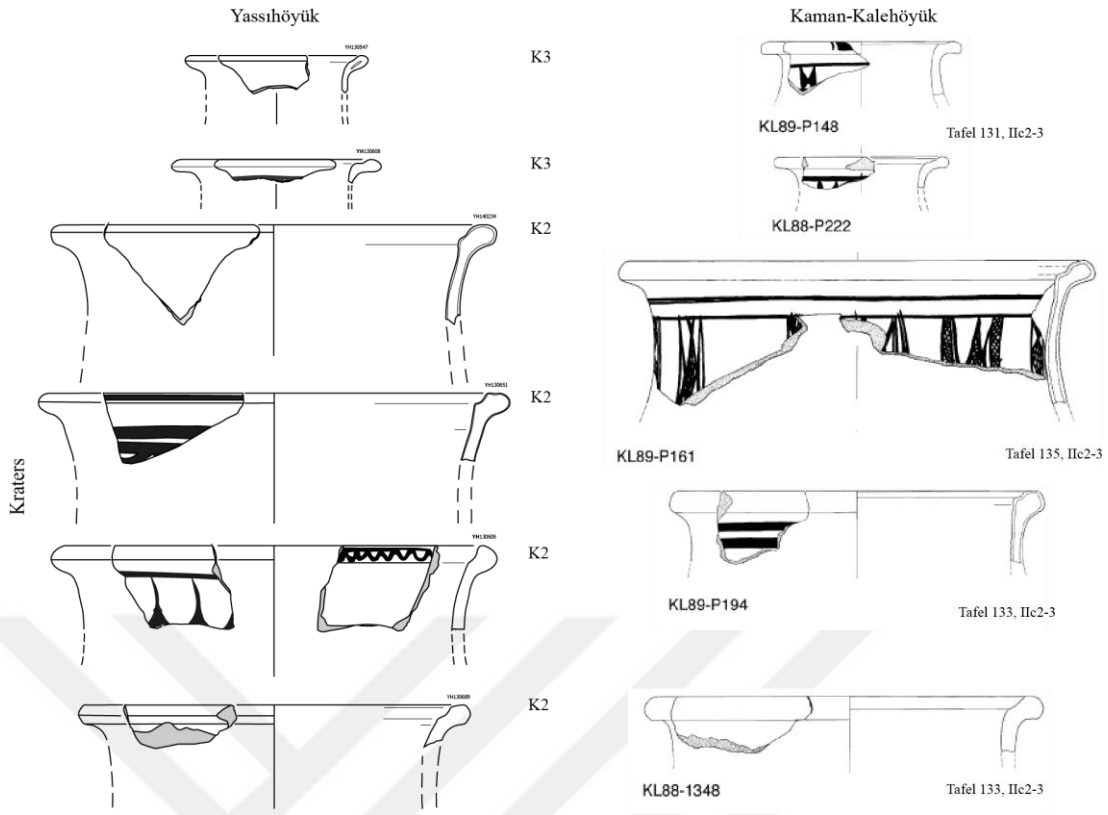


Figure 37. Kraters (K2-K3) from Yassıhöyük and Kaman-Kalehöyük (Matsumura, 2005: Pl. 131, 133, 135)

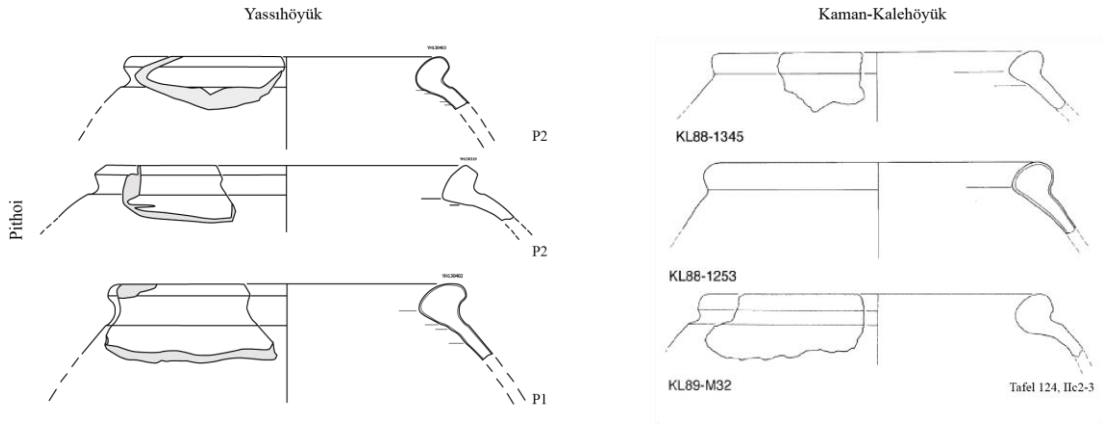


Figure 38. Pithoi (P1-P2) from Yassıhöyük and Kaman-Kalehöyük (Matsumura, 2005: Pl. 124)

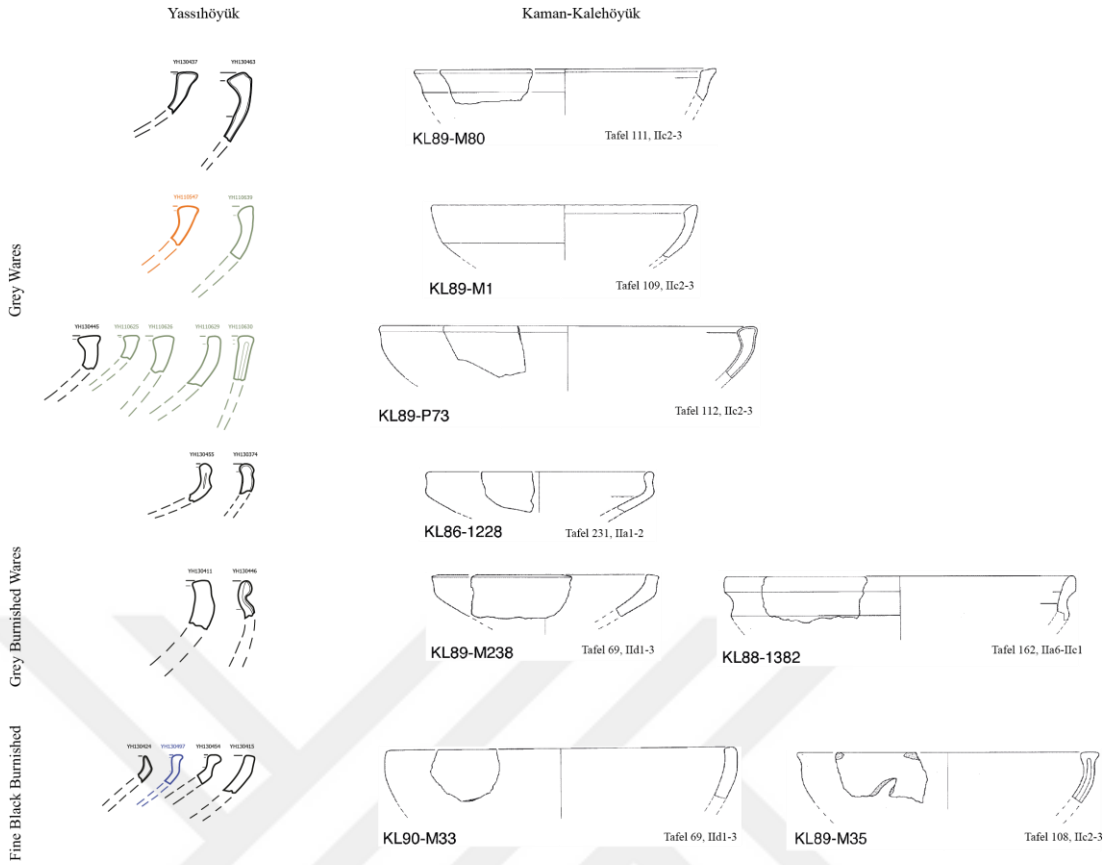


Figure 39. Grey/black vessels types (WareType5) from Yassıhöyük and Kaman-Kalehöyük (Matsumura, 2005: Pl. 69, 70, 108, 114, 151, 154, 231)

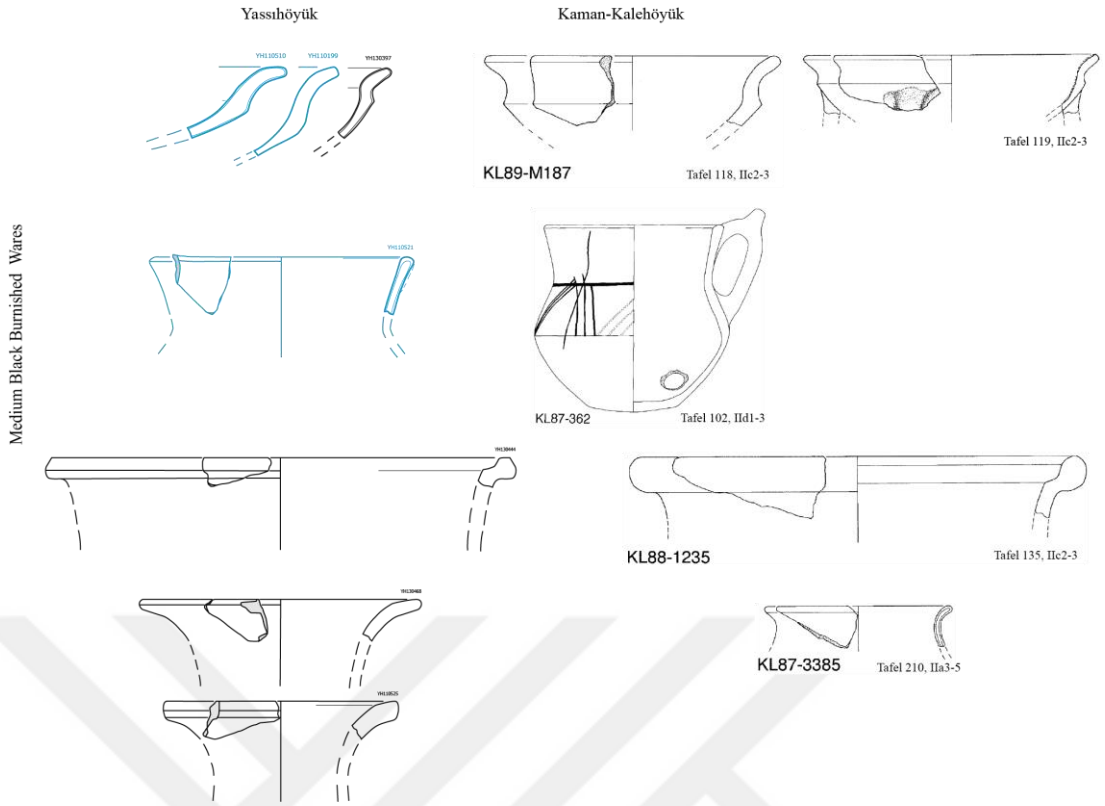


Figure 40. Medium grey/black burnished wares (WareType5) from Yassıhöyük and Kaman-Kalehöyük (Matsumura, 2005: Pl. 102, 118-119, 135, 210)

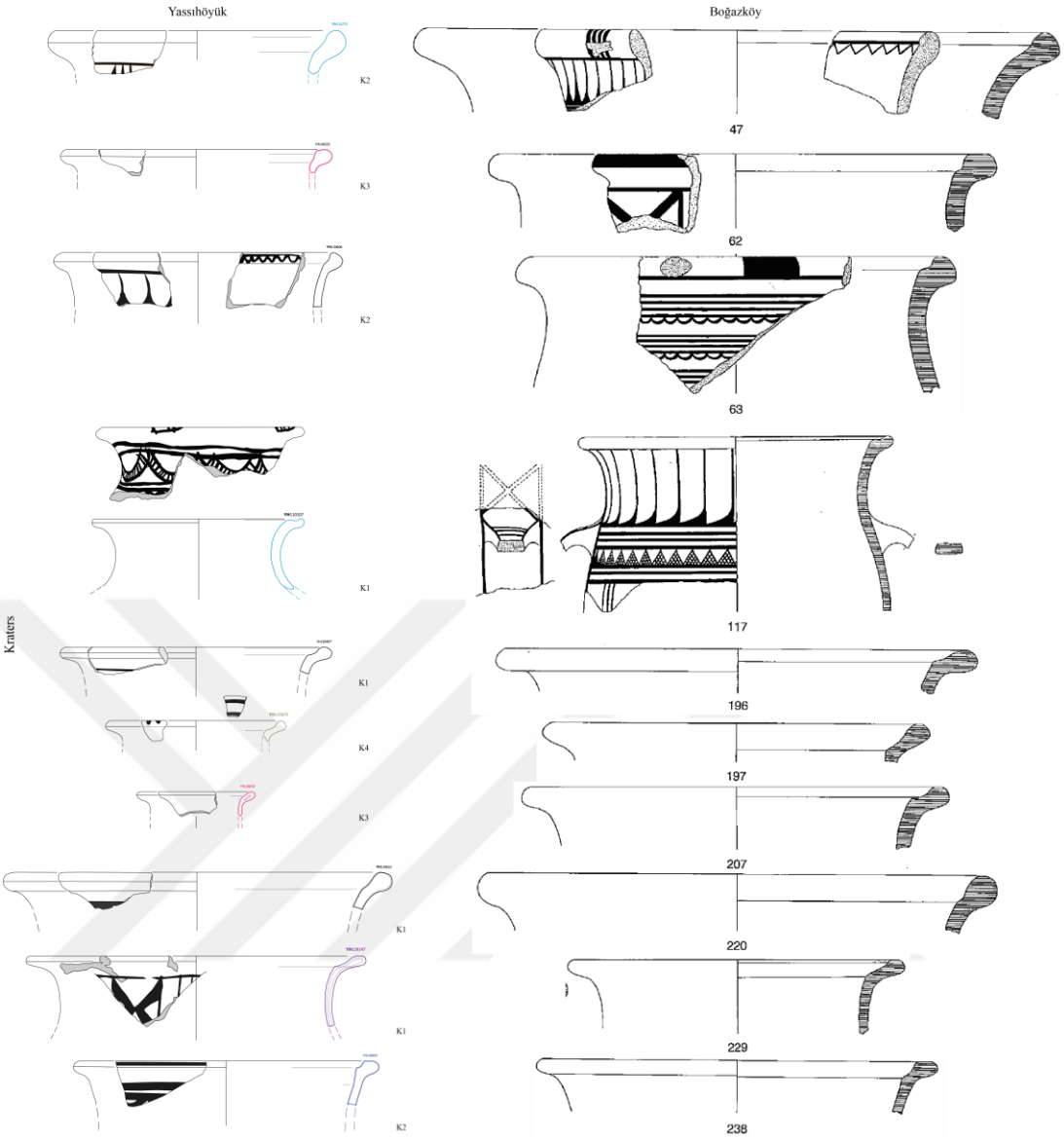


Figure 41. Kraters (K1-K4) from Yassıhöyük and Boğazköy (Bossert, 2000: Pl. 6, 196-197 (North West Slope); 47 (Büyükkaya); 62, 63, 117, 207, 220, 229, 238 (Büyükkale))

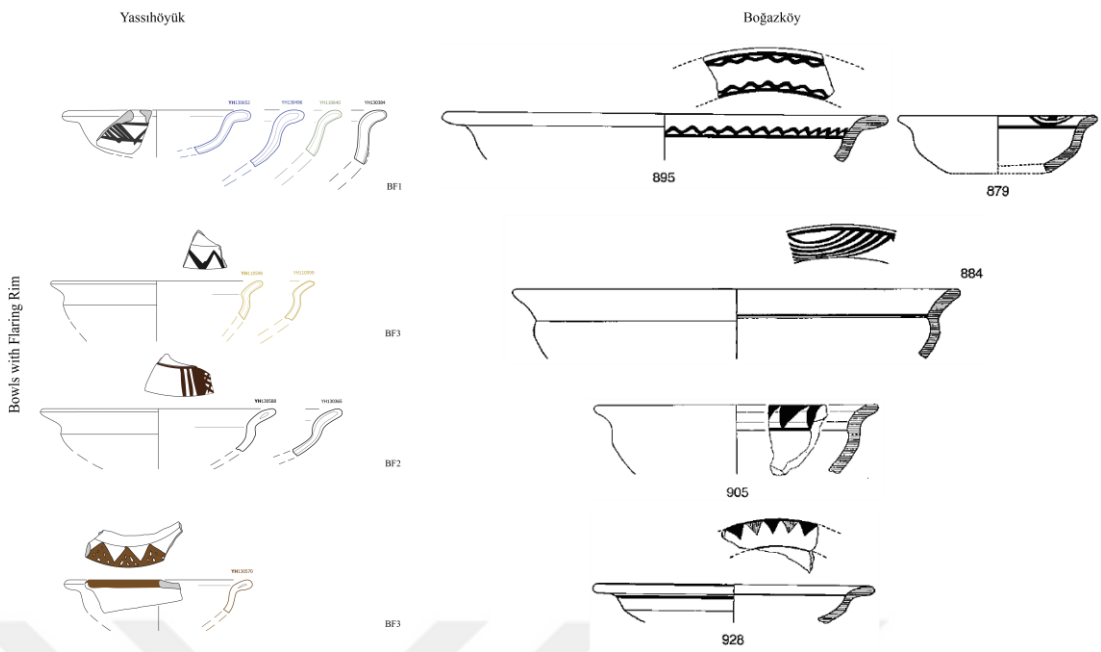


Figure 42. Bowls with flaring rim (BF1-BF3) from Yassıhöyük and Boğazköy (Bossert, 2000: Pl. 75, 905 (North West Slope); 879, 884, 895 (Büyükkaya); 928 (Büyükkale))

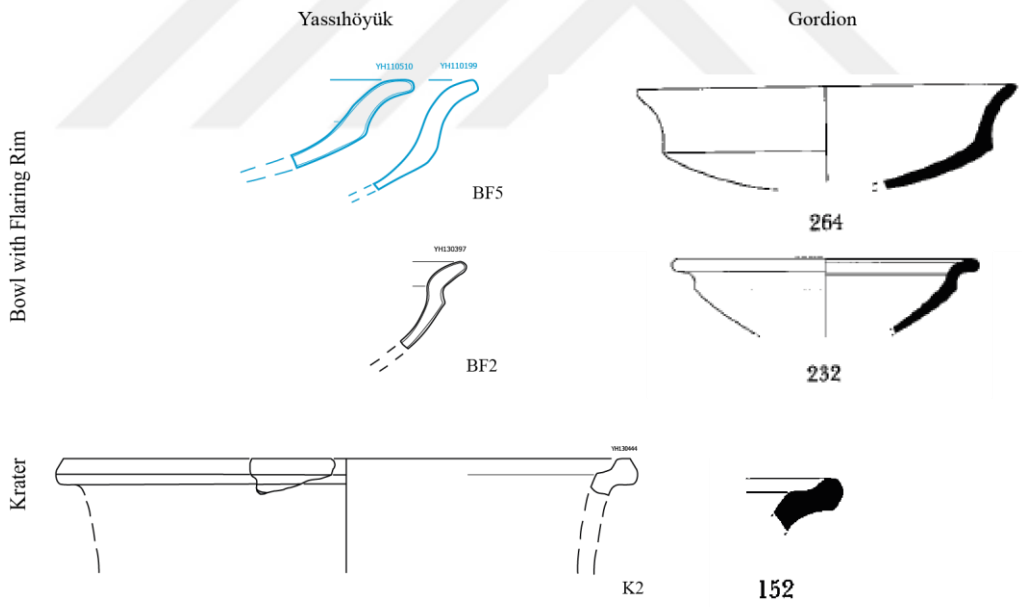


Figure 43. Bowls with flaring rim (BF2-BF5) and kraters (K2) from Yassıhöyük and Gordion (Sams, 1994: fig. 9-10, 52-53)

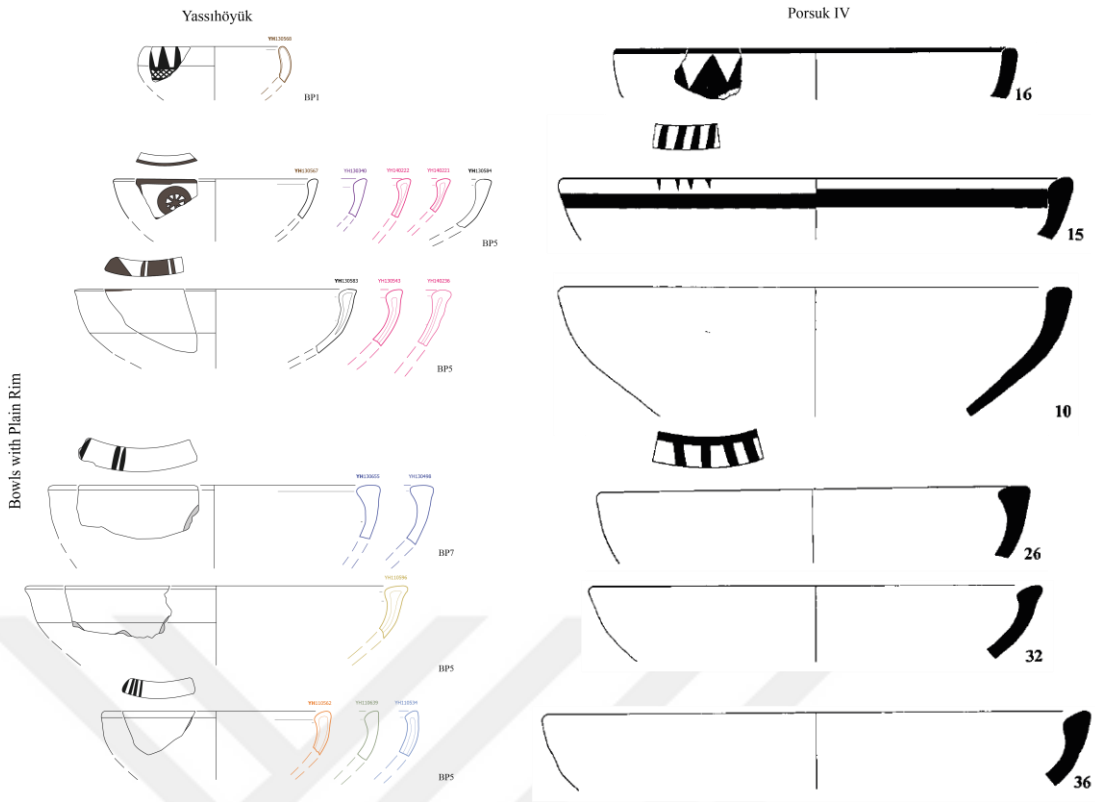


Figure 44. Bowls with plain rim (BP1, BP5, BP7) from Yassıhöyük and Porsuk IV (Dupré, 1984: Pl. 45-49)

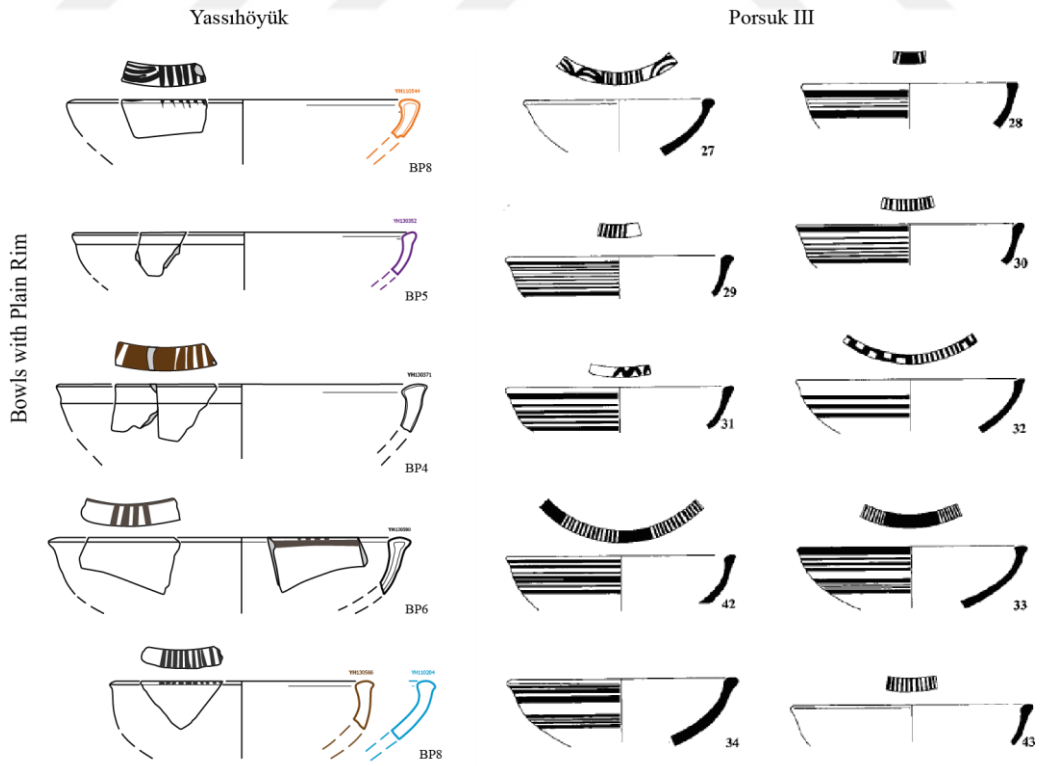


Figure 45. Bowls with plain rim (BP4, BP5, BP6, BP8) from Yassıhöyük and Porsuk III (Dupré, 1984: Pl. 63)

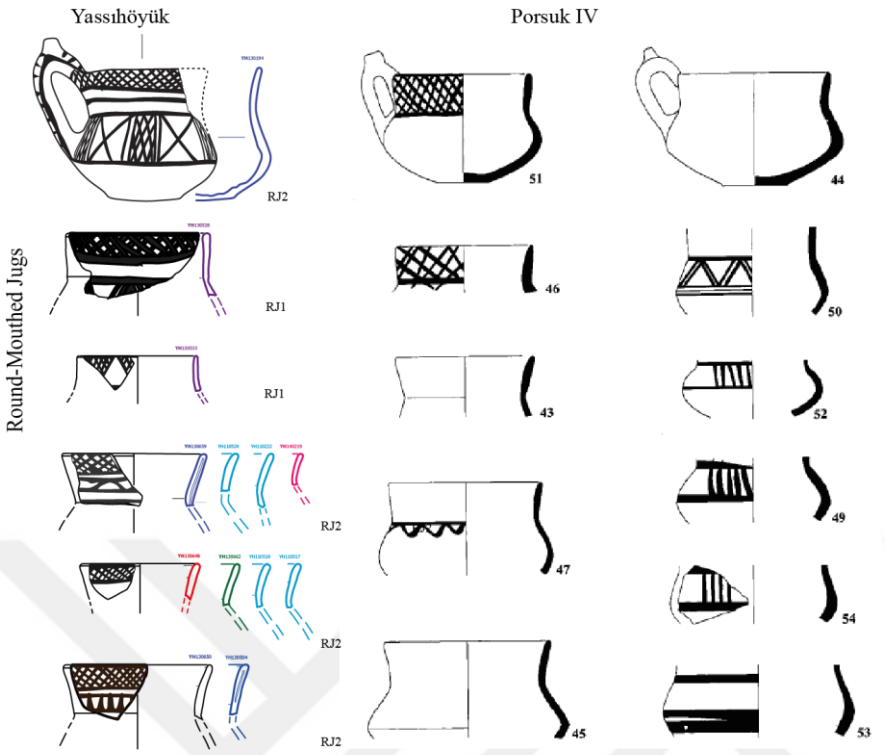


Figure 46. Round-mouthed jugs (RJ1-RJ2) from Yassıhöyük and Porsuk IV (Dupré, 1984: Pl. 51)

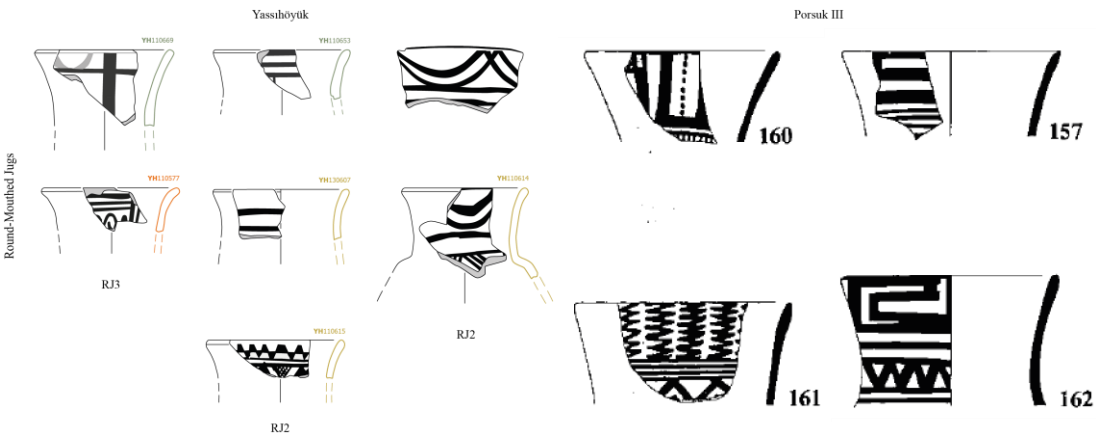


Figure 47. Round-mouthed jugs (RJ2-RJ3) from Yassıhöyük and Porsuk III (Dupré, 1984: Pl. 81)

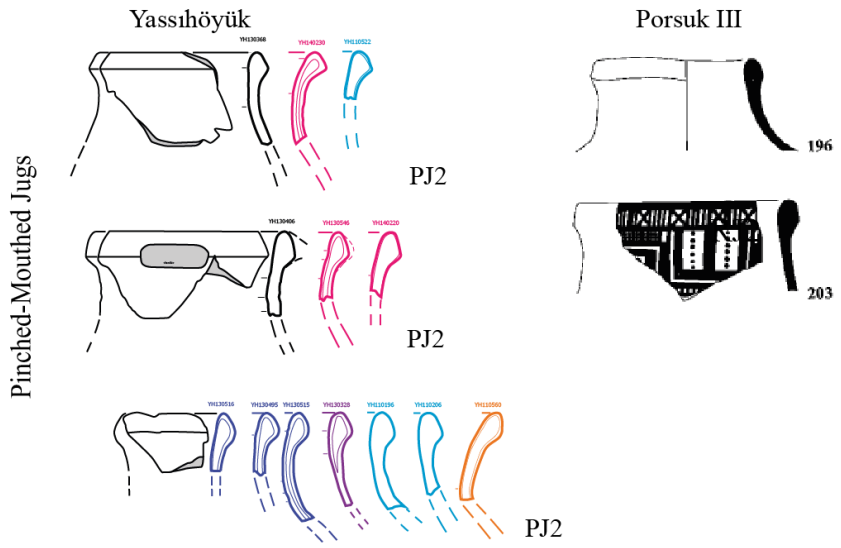


Figure 48. Pinched-mouthed jugs (PJ2) from Yassıhöyük and Porsuk III (Dupré, 1984: Pl. 85)

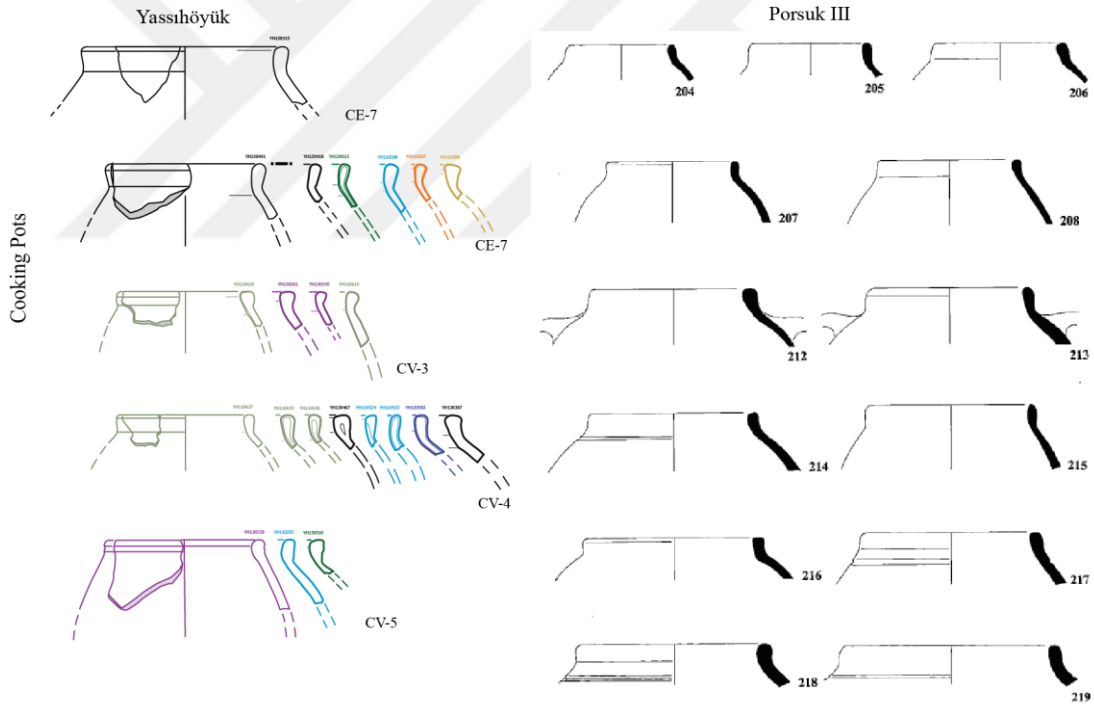


Figure 49. Cooking pots (CE-CV) from Yassıhöyük and Porsuk III (Dupré, 1984: Pl. 86)

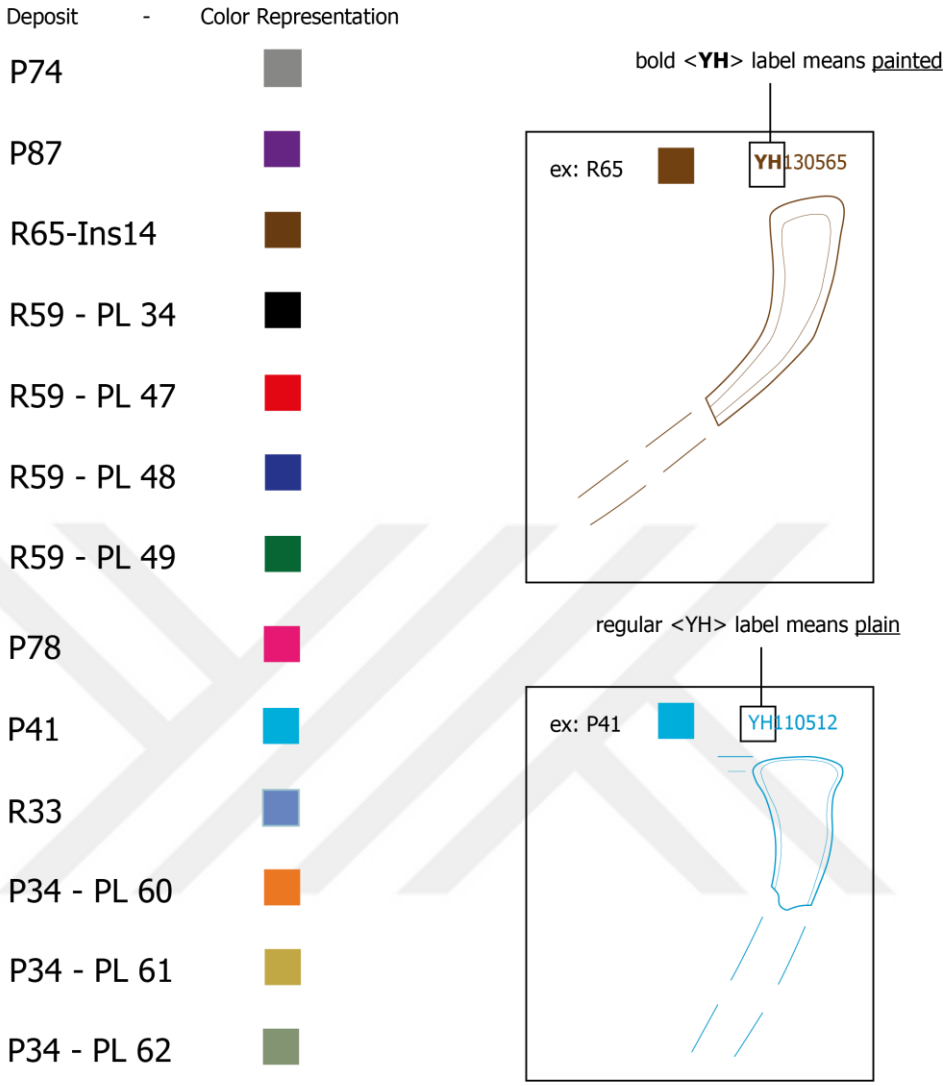


Figure 50. Color coding for the YH MIA deposits in catalogue[36]

[36] Each color represents the examples from one deposit. In this catalogue, a summary of sherds from each vessel form is represented with their profile illustrations first, their complete illustrations then. After the illustration part of each vessel form, a descriptive catalogue is provided. In each descriptive catalogue, the ceramics are ordered in an ascending order of YH-No. In these descriptive catalogues, some motifs are abbreviated. These abbreviations are explained at the foot notes. Another abbreviation is for the main ware types. In the descriptive catalogues: T1 (WareType1), T2 (WareType2), T3 (WareType3), T4 (WareType4) and T5 (WareType5).

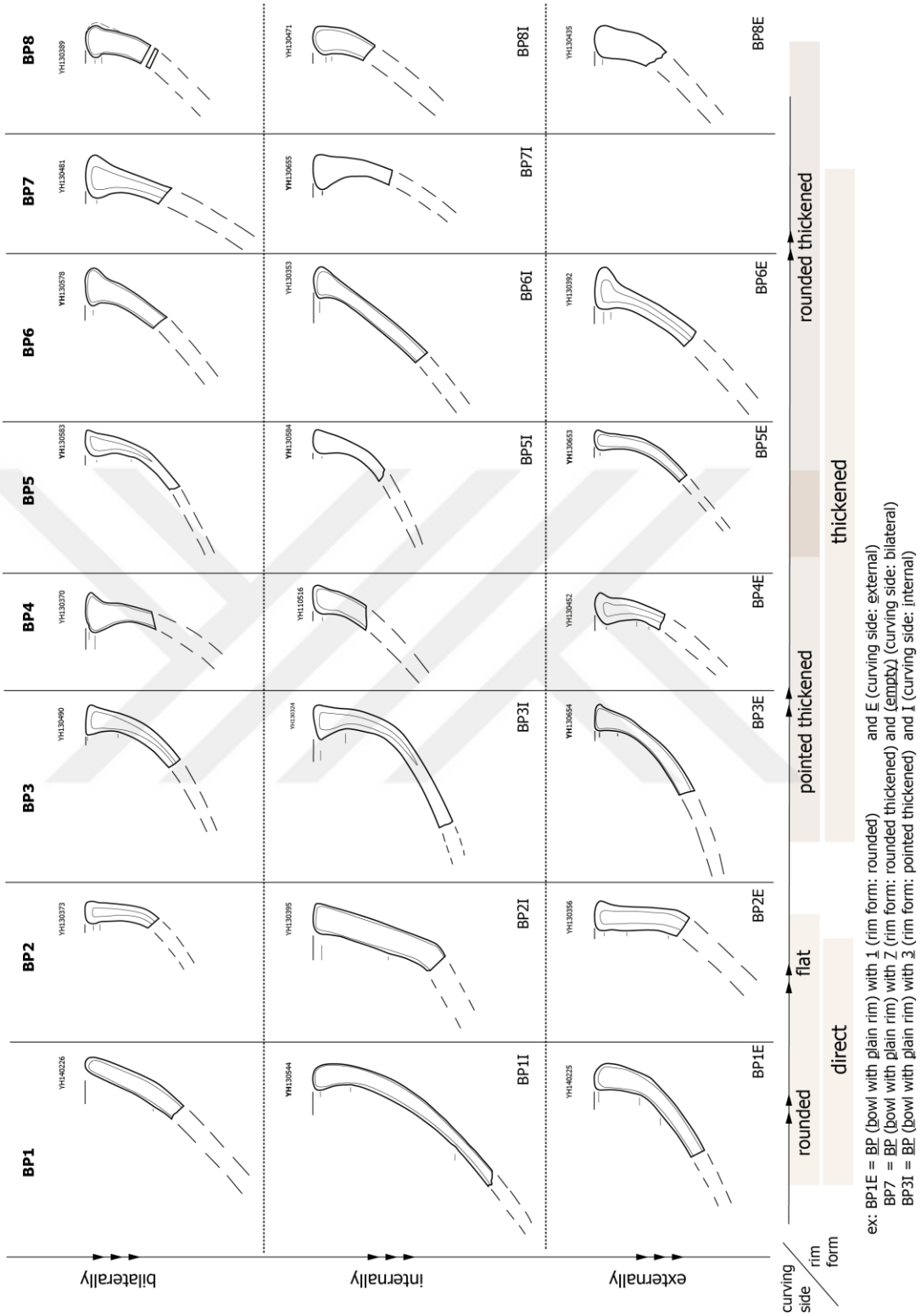


Figure 51. Summary of bowl types with plain rim (BP1-BP8)

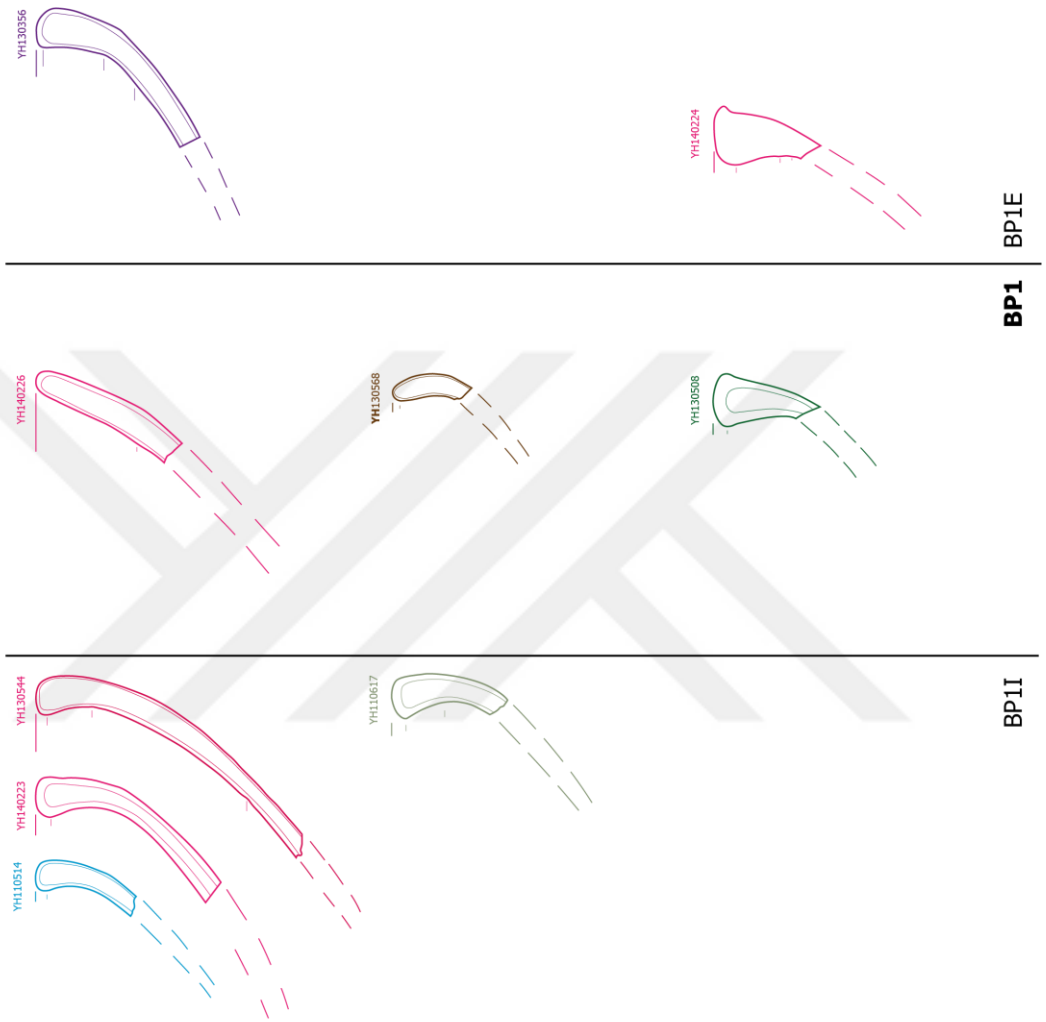


Figure 52. Summary of bowl type BP1

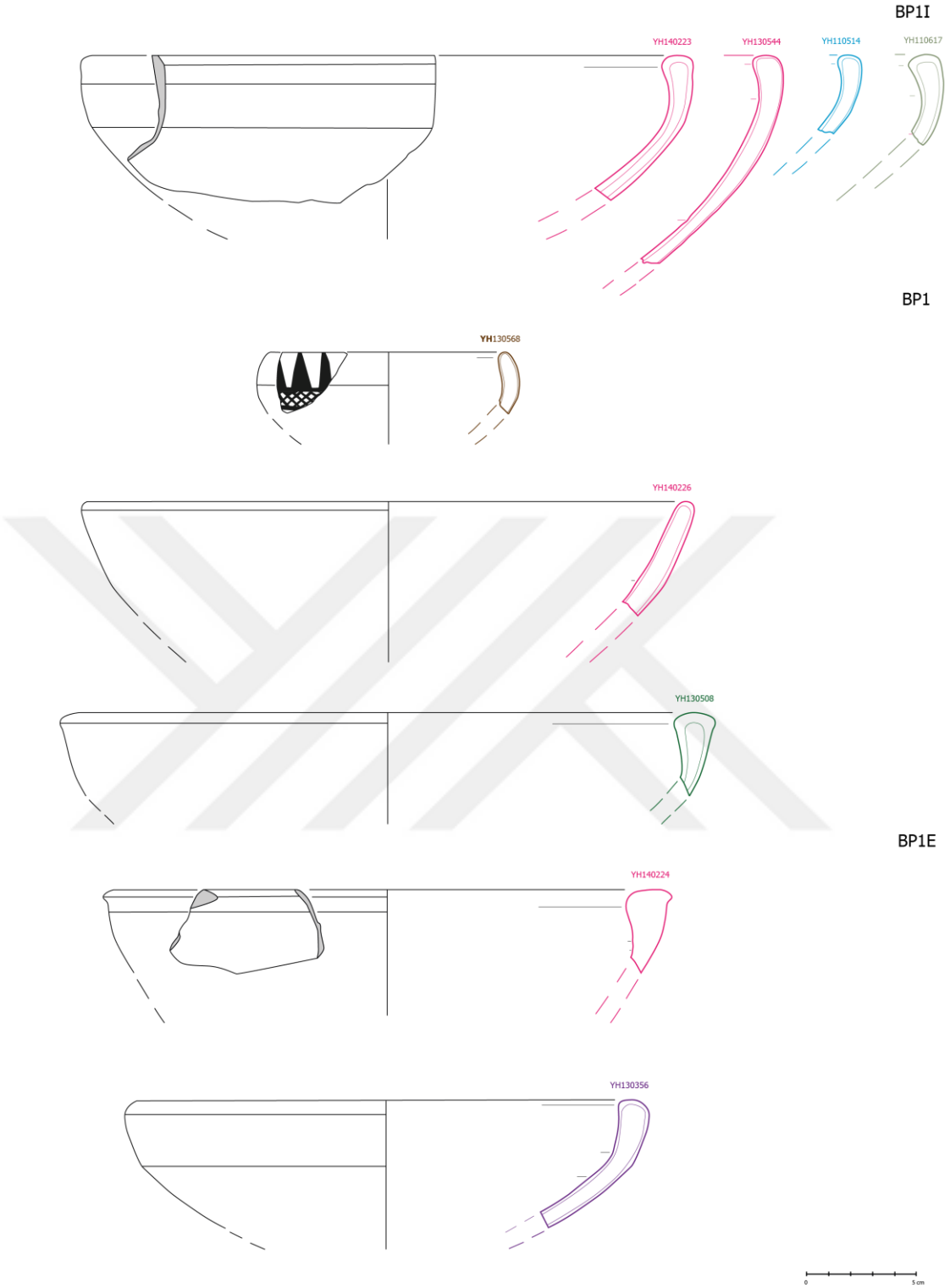


Figure 53. BP1 bowls

| YH-No | Area | Main Grid | Sub-Grid | PL | Deposit | Phase | Form-Main | Form Group | Main Type | Type | Diameter |
|---|---|---|---|---|---|---|---|---|---|---|---|
| 110514 | 1 | E8/ | d9 | 34 | P41 | I-9 | Bowl w plain rim | BP1I | T1 | B1 | 22-4% |
| 110617 | 1 | E8/ | f10 | 62 | P34 | I-9 | Bowl w plain rim | BP1I | T1 | B1 | 26-7% |
| 130356 | 1 | E8/ | d8 | 28 | P87 | I-9/I-10 | Bowl w plain rim | BP1E | T1 | B1 | 24-4% |
| 130508 | 1 | E8/ | d8 | 49 | R59 | I-11 | Bowl w plain rim | BP1I | T1 | B1 | 30-9% |
| 130544 | 1 | E8/ | d8 | 25 | P78 | I-9/I-10 | Bowl w plain rim | BP1I | T1 | B1 | 28-10% |
| 130568 | 1 | E8/ | d8 | 37 | R65 | I-10 | Bowl w plain rim | BP1 | T3 | B3 | 14-8% |
| 140223 | 1 | E8/ | d8 | 63 | P78 | I-9/I-10 | Bowl w plain rim | BP1I | T1 | B1 | 28-16% |
| 140224 | 1 | E8/ | d8 | 63 | P78 | I-9/I-10 | Bowl w plain rim | BP1E | T4 | B4 | 26-5% |
| 140226 | 1 | E8/ | d8 | 63 | P78 | I-9/I-10 | Bowl w plain rim | BP1 | T3 | B3 | 28-6% |

| YH-No | Fabric | CoreColor-Inclusion(Density+Size) | Surface/Out | Surface/In |
|---|---|---|---|---|
| 110514 | G-C | G-C (H-F), L(H-F), G(H-F), M | Burnished | Smoothed |
| 110617 | G-C | G-C (H-F), L(H-F), G(H-M, H-F), M | Burnished | Burnished |
| 130356 | G-C | G-C (H-F), L(H-F), G(H-M, H-F), M | Burnished | Burnished |
| 130508 | G-C | G-C (H-F), L(H-F), G(H-M, H-F), M | Burnished | Burnished |
| 130544 | G-C | G-C (F-C, H-M, H-F), L(H-M, H-F), G(H-M, H-F), M | Burnished | Smoothed |
| 130568 | G | G-C (F-F), L(F-F), G(F-F), M | Polished | Polished |
| 140223 | G-C+G | G-C (H-M), L(F-M, H-F), G(F-C, H-M, H-F), M | Burnished | Burnished |
| 140224 | O-L | O-C (H-F), L(F-C,H-M,H-F), G(F-M, H-F), M | Burnished | Smoothed |
| 140226 | G-L | G-C (F-C,H-F), L(F-C,H-M,H-F), G(F-M, H-F), M | Smoothed | Smoothed |

| YH-No | Color/Out | Color/In | Color/Fabric-Core | Color / Paint | Decoration |
|---|---|---|---|---|---|
| 110514 | 5YR 8/4 | 5YR 8/4 | 7.5YR 7/6 – N 4/0 | | |
| 110617 | 2.5YR 7/4 – 4/1 | 2.5YR 7/4 – 6/4 | 2.5YR 6/6 – 10YR 6/2 | | |
| 130356 | 10YR 6/3 | 7.5YR 6/3 | 7.5 YR 4/1 – N 3/0 | | |
| 130508 | 5YR 7/4 | 5YR 7/4 | 10YR 7/3 – N 4/0 | | |
| 130544 | 5YR 6/6 | 2.5YR 6/6 – 7/4 | 5YR 7/6 –10YR7/3-N 4/0 | | |
| 130568 | 10YR 7/4 | 7.5YR 7/4 | 5YR 8/3 – N 5/0 | 7.5YR 4/2 | TrianglesFill-NetPattern |
| 140223 | 5YR 7/4 | 5YR 7/4 | 5YR 7/6 – N 4/0 | | |
| 140224 | 5Y 8/3 | 5Y 8/4 | 2.5YR 7/6-7/4-5/1 | | |
| 140226 | 2.5Y 8/3 | 2.5Y 8/3 | 5YR 7/6 – N 5/0 | | |

Figure 54. Descriptive catalogue of BP1 bowls[37]

[37] TrianglesFill: Triangles with solid fill; NetPattern: Fill with net pattern;

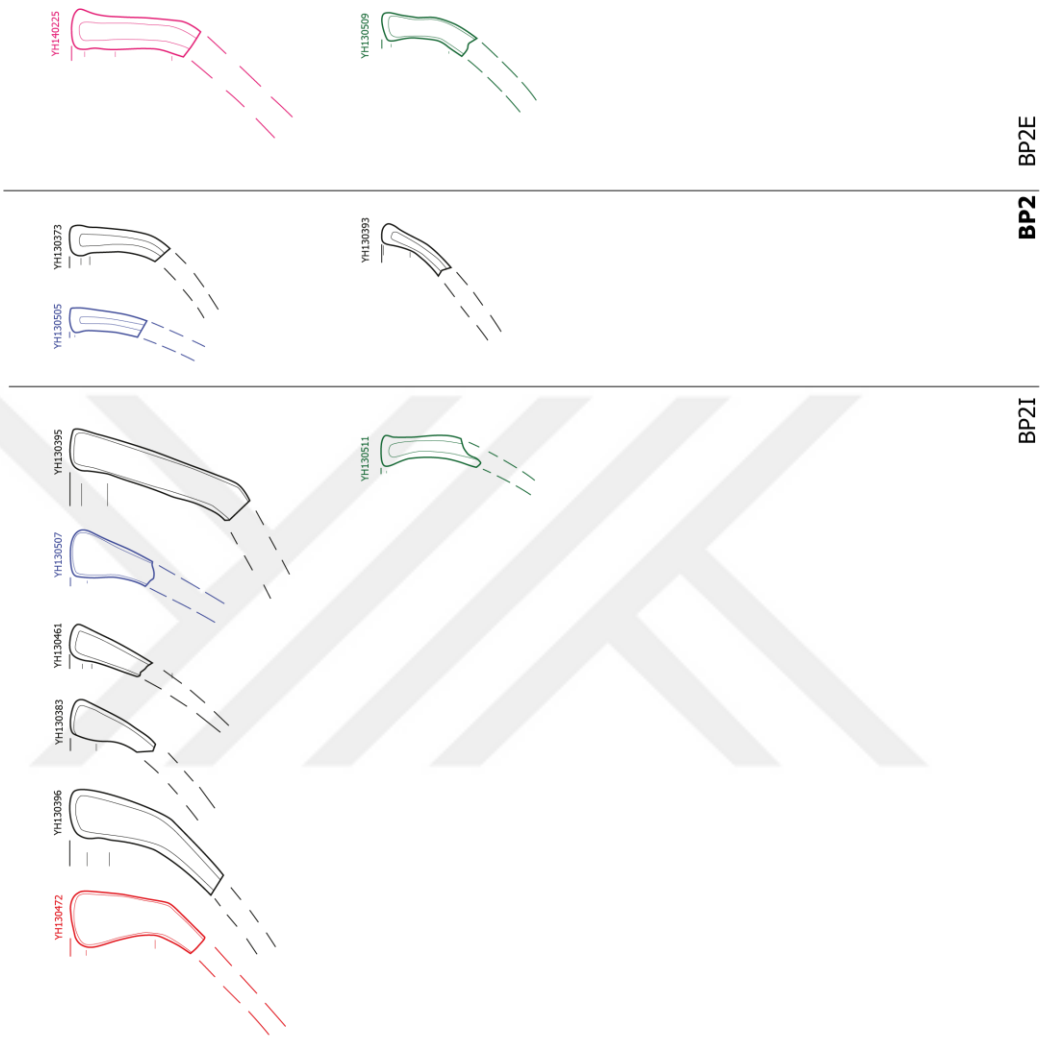


Figure 55. Summary of bowl type BP2

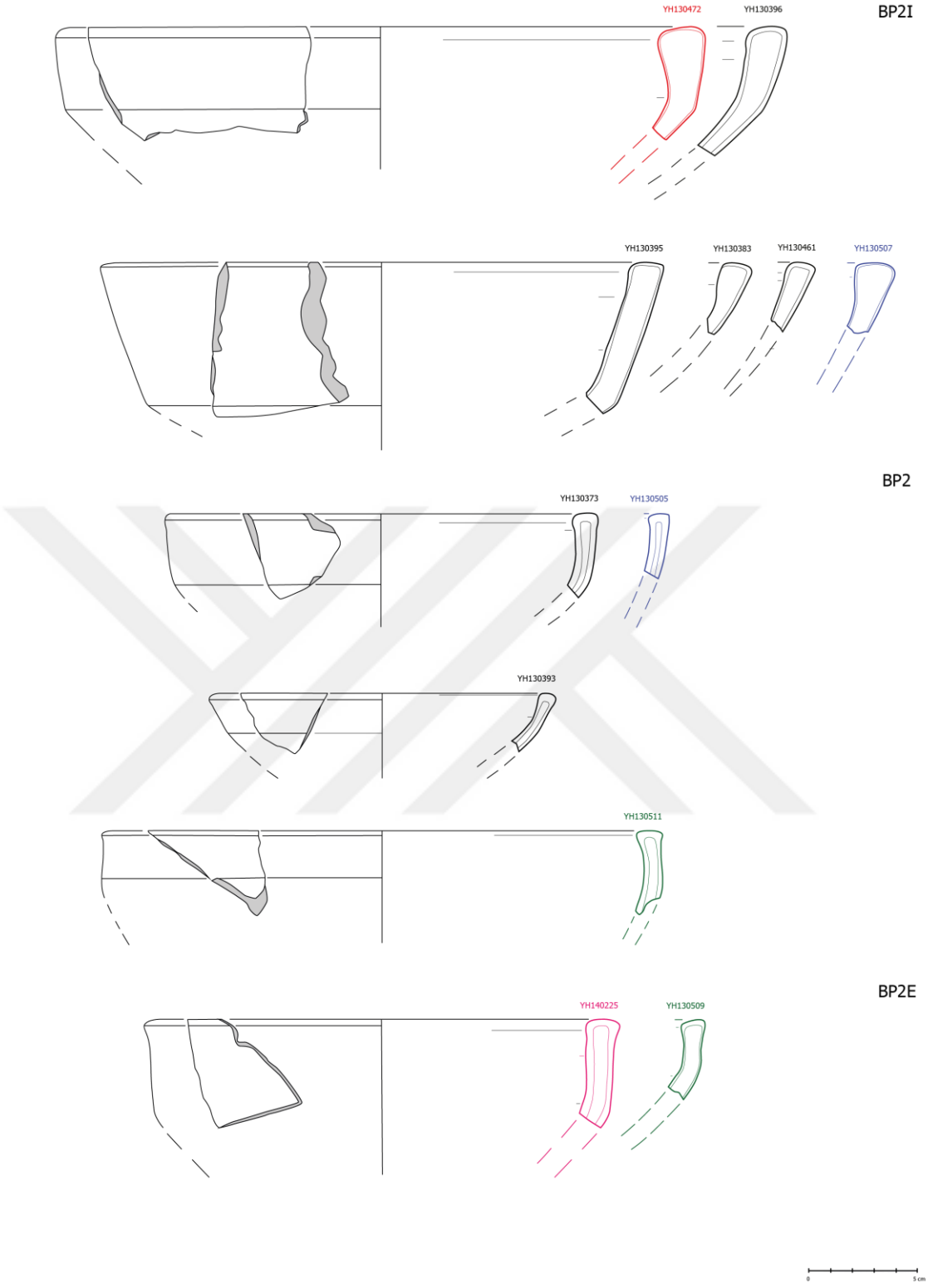


Figure 56. BP2 bowls

| YH-No | Area | Main Grid | Sub-Grid | PL | Deposit | Phase | Form-Main | Form Group | Main Type | Type | Diameter |
|---|---|---|---|---|---|---|---|---|---|---|---|
| 130373 | 1 | E 8/ | d8 | 34 | R59 | I-11 | Bowl w plain rim | BP2 | T1 | B1 | 20-5% |
| 130383 | 1 | E 8/ | d8 | 34 | R59 | I-11 | Bowl w plain rim | BP2I | T3 | B3 | 20-11% |
| 130393 | 1 | E 8/ | d8 | 34 | R59 | I-11 | Bowl w plain rim | BP2 | T1 | B1 | 16-10% |
| 130395 | 1 | E 8/ | d8 | 34 | R59 | I-11 | Bowl w plain rim | BP2I | T4 | B4 | 26-5% |
| 130396 | 1 | E 8/ | d8 | 34 | R59 | I-11 | Bowl w plain rim | BP2I | T1 | T1 | 30-12% |
| 130461 | 1 | E 8/ | d8 | 34 | R59 | I-11 | Bowl w plain rim | BP2I | T3 | B3 | 22-9% |
| 130472 | 1 | E 8/ | d8 | 47 | R59 | I-11 | Bowl w plain rim | BP2I | T1 | B1 | 30-13% |
| 130505 | 1 | E 8/ | d8 | 48 | R59 | I-11 | Bowl w plain rim | BP2 | T1 | B1 | 20-5% |
| 130507 | 1 | E 8/ | d8 | 48 | R59 | I-11 | Bowl w plain rim | BP2I | T1 | B1 | 28-6% |
| 130509 | 1 | E 8/ | d8 | 49 | R59 | I-11 | Bowl w plain rim | BP2E | T1 | B1 | 20-9% |
| 130511 | 1 | E 8/ | d8 | 49 | R59 | I-11 | Bowl w plain rim | BP2I | T2 | B2 | 26-7% |
| 140225 | 1 | E 8/ | d8 | 63 | P78 | I-9/I-10 | Bowl w plain rim | BP2E | T3 | B3 | 22-6% |

| YH-No | Fabric | CoreColor-Inclusion(Density+Size) | Surface/Out | Surface/In |
|---|---|---|---|---|
| 130373 | G-C | G-C (H-F), L(H-F), G(H-M&F), M | Burnished | Burnished |
| 130383 | G-L | G-C (H-F), L(F-C, F-M, H-F), G(H-M&F), M | Smoothed | Smoothed |
| 130393 | G-L | G-C (F-F), L(F-F), G(F-C, H-F), M | Smoothed | Smoothed |
| 130395 | G-L | G-C (F-C, H-F), L(H-M, H-F), G(H-M, H-F), M | Burnished | Burnished |
| 130396 | G-C+L | G-C (H-F), L(F-C, F-M, H-F), G(H-M, H-F), M | Burnished | Smoothed |
| 130461 | G-L | G-C (H-F), L(H-M, H-F), G(F-M, H-F), M | Burnished | Burnished |
| 130472 | G-C | G-C (H-F), L(H-F), G(H-M, H-F), M | Polished | Polished |
| 130505 | G-C | G-C (H-F), L(H-F), G(F-M, H-F), M | Burnished | Burnished |
| 130507 | G-C+L | G-C (H-F), L(F-M,H-F), G(F-M,H-F), M | Smoothed-Slip | Smoothed |
| 130509 | G-C | G-C (H-M, H-F), L(H-F), G(H-F), M | Burnished-Slip | Burnished-Slip |
| 130511 | G-L | G-C (H-F), L(F-M, H-F), G(H-F), M | Burnished | Burnished |
| 140225 | G-L | G-C (H-M), L(F-M, H-F), G(H-F), M | Burnished | Burnished |

| YH-No | Color/Out | Color/In | Color/Fabric-Core | Color / Paint | Decoration |
|---|---|---|---|---|---|
| 130373 | 7.5YR 6/4 | 7.5YR 6/4 | 7.5YR 7/3 – N 4/0 | | |
| 130383 | 2.5YR 7/6 – 10 YR 8/3 | 5YR 8/3 – 7/3 | 10R 6/8-7.5 YR 7/4-N 5/0 | | |
| 130393 | 5YR 7/4 | 5YR 7/4 | 5YR 7/4 – 10 YR 7/1 | | |
| 130395 | 10YR 8/3 | 7.5YR 7/4 | 5YR 6/4 – N 4/0 | | |
| 130396 | 5YR 7/4 | 2.5YR 6/6 – 10 YR 7/2 | 5YR 7/4 – N 5/0 | | |
| 130461 | 7.5YR 7/3 | 7.5YR 7/4 | 2.5Y 7/4 – N 5/0 | 2.5YR 3/1 | LineVert–LineHorz–RectFill |
| 130472 | 5YR 8/3 | 5YR 7/4 | N 4/0 | | |
| 130505 | 5YR 7/4 | 5YR 7/4 | 5YR 8/4 – N 4/0 | | |
| 130507 | 10R 6/4 – 5 YR 8/3 | 5 YR 4/1 | 2.5YR 6/6 – 5YR 7/2 | | |
| 130509 | 10R 5/6 | 10R 5/6 | 10YR 8/3 – 7.5 Y 5/1 | | |
| 130511 | 5YR 8/3 | 2.5YR 7/4 | 2.5YR 7/6-5YR 8/4-N 7/0 | | |
| 140225 | 10YR 7/4 | 2.5Y 8/4 | 5YR 7/4 – N 5/0 | | |

Figure 57. Descriptive catalogue of BP2 bowls[38]

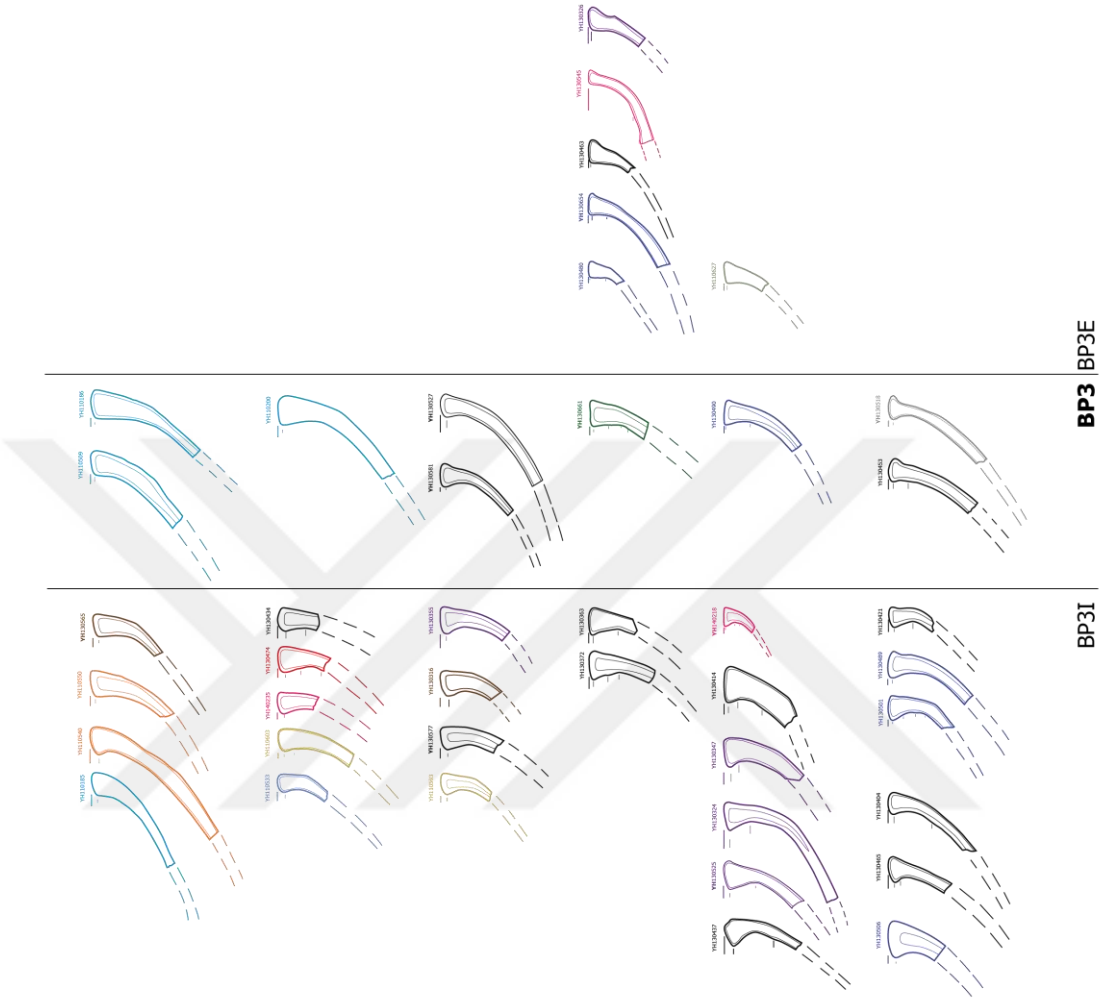


Figure 58. Summary of bowl type BP3

[38] LineVert: Vertical Line(s); LineHorz: Horizontal Line(s); RectFill: Rectangular with solid fill;

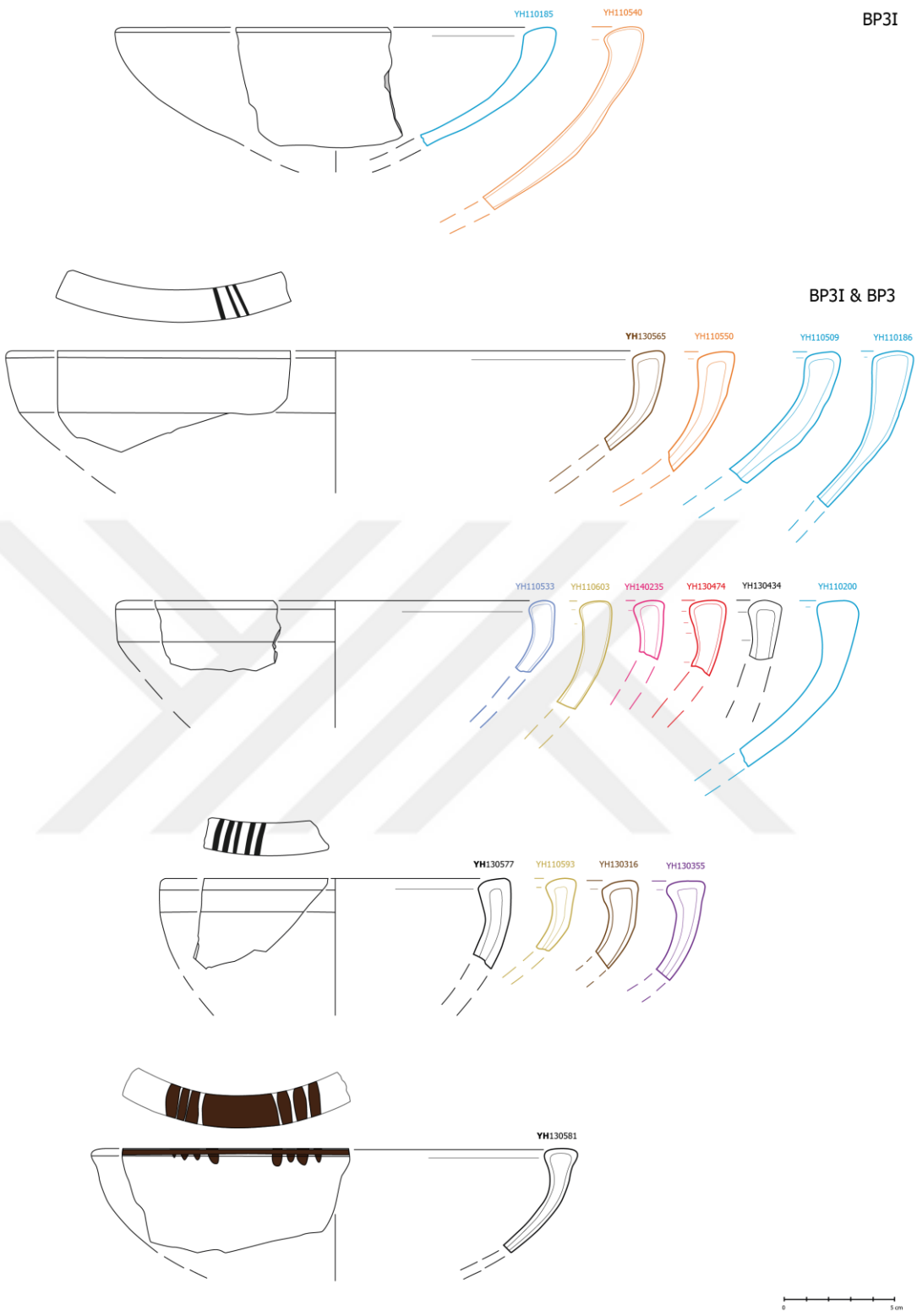


Figure 59. BP3 bowls

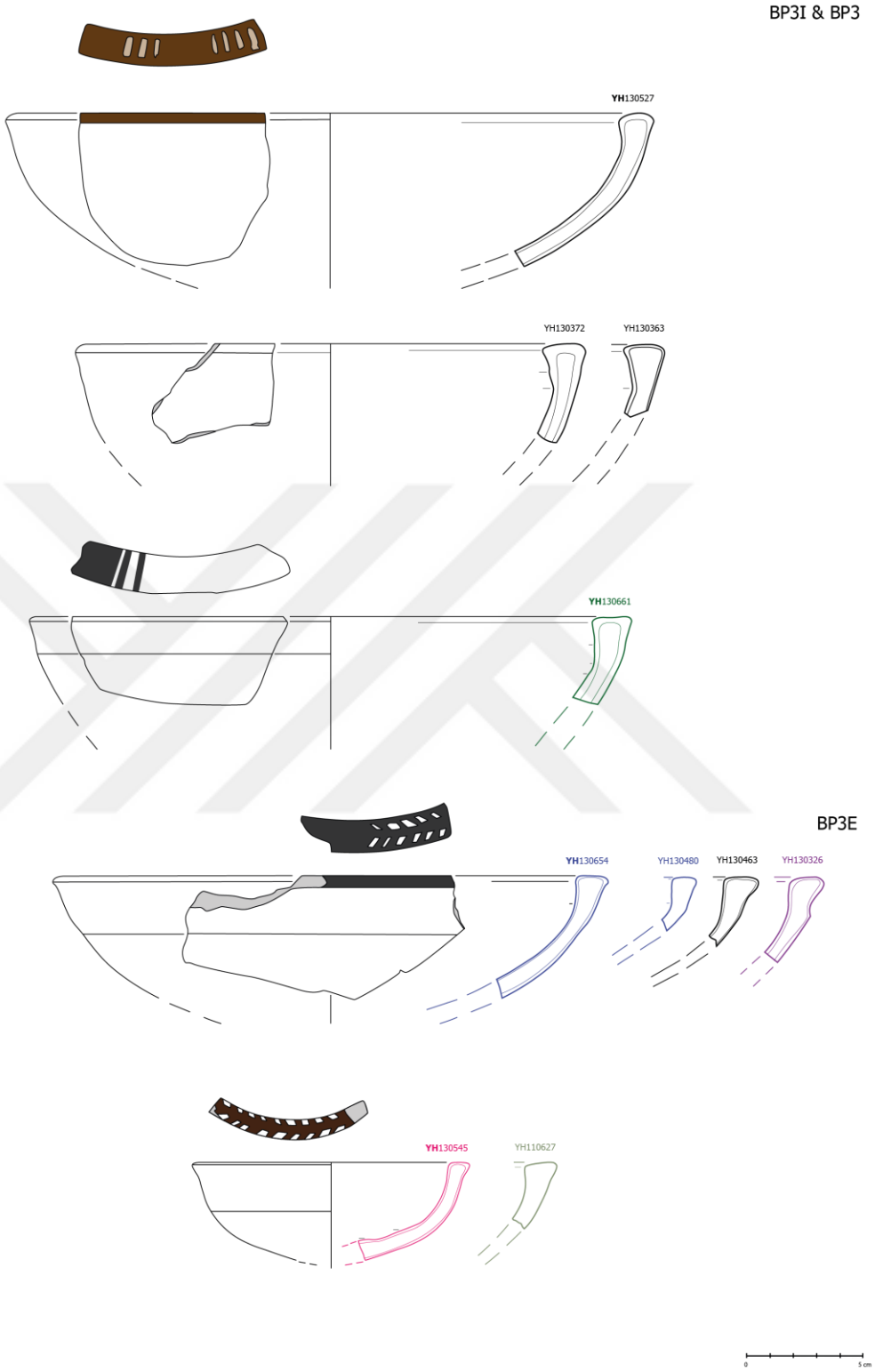


Figure 60. BP3 bowls

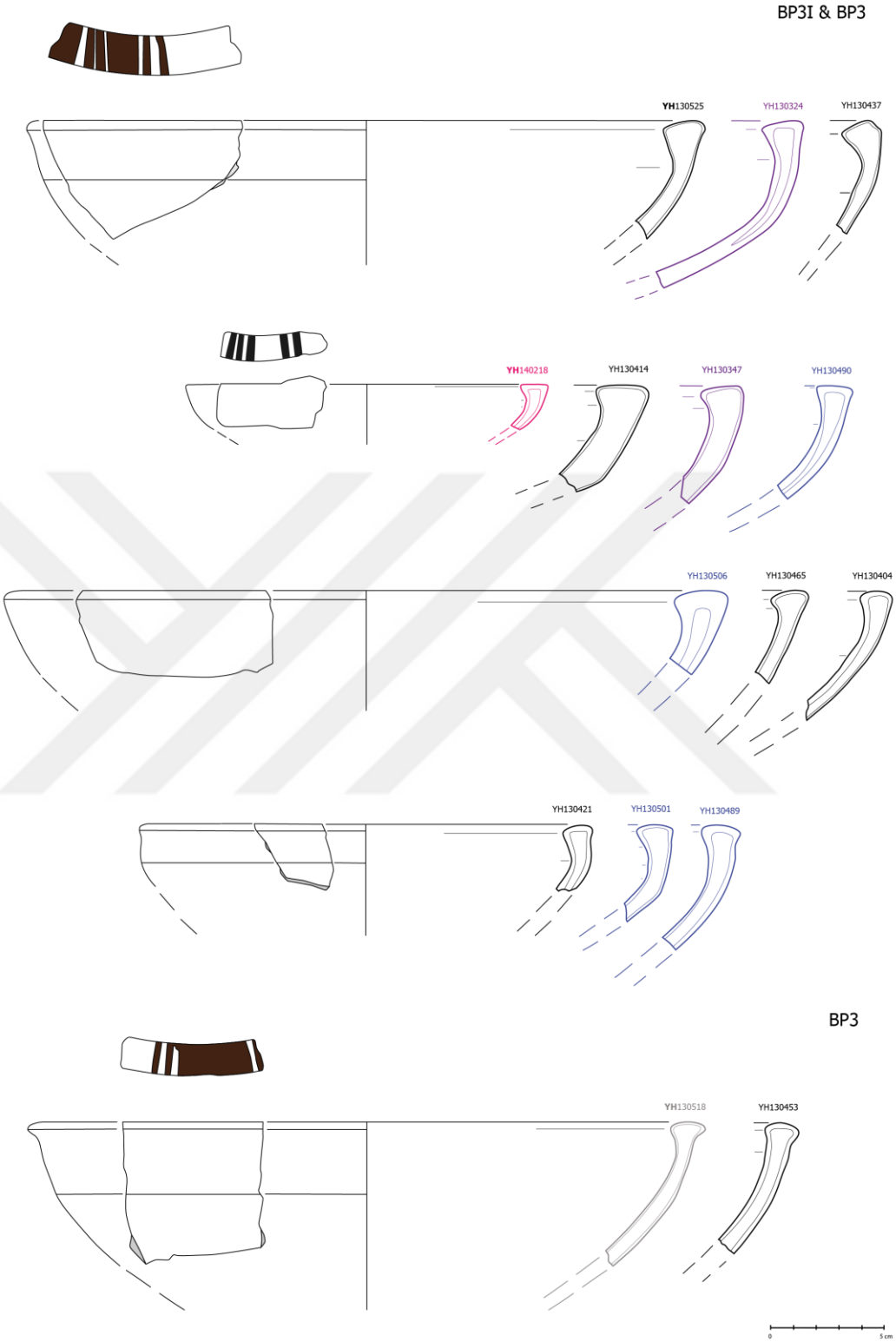


Figure 61. BP3 bowls

| YH-No | Area | Main Grid | Sub-Grid | PL | Deposit | Phase | Form-Main | Form Group | Main Type | Type | Diameter |
|---|---|---|---|---|---|---|---|---|---|---|---|
| 110185 | 1 | E8/ | d 9 | 34 | P41 | I-9 | Bowl w plain rim | BP3I | T1 | B1 | 20-11% |
| 110186 | 1 | E8/ | d 9 | 34 | P41 | I-9 | Bowl w plain rim | BP3 | T1 | B1 | 28-16% |
| 110200 | 1 | E8/ | d 9 | 34 | P41 | I-9 | Bowl w plain rim | BP3 | T1 | B1 | 30-15% |
| 110509 | 1 | E8/ | d9 | 34 | P41 | I-9 | Bowl w plain rim | BP3 | T1 | B1 | 26-9% |
| 110533 | 1 | E8/ | d9 | 36 | R33 | I-11 | Bowl w plain rim | BP3I | T1 | B1 | 20-11% |
| 110540 | 1 | E8/ | f10 | 60 | P34 | I-9 | Bowl w plain rim | BP3I | T1 | B1 | 28-6% |
| 110550 | 1 | E8/ | f10 | 60 | P34 | I-9 | Bowl w plain rim | BP3I | T1 | B1 | 22-10% |
| 110593 | 1 | E8/ | f10 | 61 | P34 | I-9 | Bowl w plain rim | BP3I | T1 | B1 | 20-5% |
| 110603 | 1 | E8/ | f10 | 61 | P34 | I-9 | Bowl w plain rim | BP3I | T1 | B1 | 30-12% |
| 110627 | 1 | E8/ | f10 | 62 | P34 | I-9 | Bowl w plain rim | BP3E | T1 | B1 | 22-6% |
| 130316 | 1 | E8/ | d8 | 37 | R65 | I-10 | Bowl w plain rim | BP3I | T1 | B1 | 22-4% |
| 130324 | 1 | E8/ | d8 | 28 | P87 | I-9/I-10 | Bowl w plain rim | BP3I | T1 | B1 | 24-10% |
| 130326 | 1 | E8/ | d8 | 28 | P87 | I-9/I-10 | Bowl w plain rim | BP3E | T1 | B1 | 26-8% |
| 130347 | 1 | E8/ | d8 | 28 | P87 | I-9/I-10 | Bowl w plain rim | BP3I | T1 | B1 | 24-10% |
| 130355 | 1 | E8/ | d8 | 28 | P87 | I-9/I-10 | Bowl w plain rim | BP3I | T1 | B1 | 28-16% |
| 130363 | 1 | E8/ | d8 | 34 | R59 | I-11 | Bowl w plain rim | BP3I | T1 | B1 | 26-9% |
| 130372 | 1 | E8/ | d8 | 34 | R59 | I-11 | Bowl w plain rim | BP3I | T1 | B1 | 22-5% |
| 130404 | 1 | E8/ | d8 | 34 | R59 | I-11 | Bowl w plain rim | BP3I | T1 | B1 | 24-11% |
| 130414 | 1 | E8/ | d8 | 34 | R59 | I-11 | Bowl w plain rim | BP3I | T1 | B1 | 28-6% |
| 130421 | 1 | E8/ | d8 | 34 | R59 | I-11 | Bowl w plain rim | BP3I | T1 | B1 | 22-5% |
| 130434 | 1 | E8/ | d8 | 34 | R59 | I-11 | Bowl w plain rim | BP3I | T1 | B1 | 18-10% |
| 130437 | 1 | E8/ | d8 | 34 | R59 | I-11 | Bowl w plain rim | BP3I | T5 | B5 | 24-3% |
| 130453 | 1 | E8/ | d8 | 34 | R59 | I-11 | Bowl w plain rim | BP3 | T1 | B1 | 32-7% |
| 130463 | 1 | E8/ | d8 | 34 | R59 | I-11 | Bowl w plain rim | BP3E | T5 | B5 | 22-3% |
| 130465 | 1 | E8/ | d8 | 34 | R59 | I-11 | Bowl w plain rim | BP3I | T1 | B1 | 28-8% |
| 130474 | 1 | E8/ | d8 | 47 | R59 | I-11 | Bowl w plain rim | BP3I | T1 | B1 | 30-5% |
| 130480 | 1 | E8/ | d8 | 48 | R59 | I-11 | Bowl w plain rim | BP3E | T1 | B1 | 24-4% |
| 130489 | 1 | E8/ | d8 | 48 | R59 | I-11 | Bowl w plain rim | BP3I | T1 | B1 | 24-4% |
| 130490 | 1 | E8/ | d8 | 48 | R59 | I-11 | Bowl w plain rim | BP3 | T2 | B3 | 28-12% |
| 130501 | 1 | E8/ | d8 | 48 | R59 | I-11 | Bowl w plain rim | BP3I | T1 | B1 | 26-9% |
| 130506 | 1 | E8/ | d8 | 48 | R59 | I-11 | Bowl w plain rim | BP3I | T1 | B1 | 32-9% |
| 130518 | 1 | E8/ | d8 | 19 | P74 | I-9/I-10 | Bowl w plain rim | BP3 | T1 | B1 | 30-7% |
| 130525 | 1 | E8/ | d8 | 28 | P87 | I-9/I-10 | Bowl w plain rim | BP3I | T1 | B1 | 30-10% |
| 130527 | 1 | E8/ | d8 | 28 | P87 | I-9/I-10 | Bowl w plain rim | BP3 | T1 | B1 | 28-10% |
| 130545 | 1 | E8/ | d8 | 25 | P78 | I-9/I-10 | Bowl w plain rim | BP3E | T1 | B1 | 12-20% |
| 130565 | 1 | E8/ | d8 | 37 | R65 | I-10 | Bowl w plain rim | BP3I | T1 | B1 | 30-15% |
| 130577 | 1 | E8/ | d8 | 34 | R59 | I-11 | Bowl w plain rim | BP3I | T1 | B1 | 26-5% |
| 130581 | 1 | E8/ | d8 | 34 | R59 | I-11 | Bowl w plain rim | BP3 | T4 | B4 | 22-4% |
| 130654 | 1 | E8/ | d8 | 48 | R59 | I-11 | Bowl w plain rim | BP3E | T1 | B1 | 24-7% |
| 130661 | 1 | E8/ | d8 | 49 | R59 | I-11 | Bowl w plain rim | BP3 | T1 | B1 | 26-12% |
| 140218 | 1 | E8/ | d8 | 63 | P78 | I-9/I-10 | Bowl w plain rim | BP3I | T2 | B2 | 16-10% |
| 140235 | 1 | E8/ | d8 | 63 | P78 | I-9/I-10 | Bowl w plain rim | BP3I | T1 | B1 | 30-5% |

Figure 62. Descriptive Catalogue of BP3 bowls

| YH-No | Fabric | CoreColor-Inclusion(Density+Size) | Surface/Out | Surface/In |
|---|---|---|---|---|
| 110185 | G-L | G-C(H-F), L(F-M, H-F), G(H-F), M | Burnished | Burnished |
| 110186 | G-C | G-C(H-F), L(F-M, H-F), G(H-F), M | Burnished | Burnished |
| 110200 | G-C | G-C(H-F), L(H-F), G(F-M, H-F), M | Burnished | Burnished |
| 110509 | G | G-C(H-F), L(H-F), G(F-M, H-F), M | Burnished | Smoothed |
| 110533 | G-C | G-C(H-F), L(H-F), G(F-M, H-F), M | Burnished | Smoothed |
| 110540 | G-G | G-C(H-F), L(H-F), G(F-C, F-M, H-F), M | Burnished | Smoothed |
| 110550 | G-G | G-C(H-F), L(H-F), G(F-C, F-M, H-F), M | Burnished | Smoothed |
| 110593 | G-G | G-C(H-F), L(H-F), G(F-M, H-F), M | Burnished | Burnished |
| 110603 | G-G | G-C(H-F), L(H-F), G(F-M, H-F), M | Burnished | Burnished |
| 110627 | G | G-C(F-F), L(H-F), G(M-F), M | Burnished | Burnished |
| 130316 | G-C | G-C(H-F), L(H-F), G(F-M, H-F), M | Burnished | Burnished |
| 130324 | G-C | G-C(H-F, F-C), L(H-F), G(F-M, H-F), M | Burnished | Burnished |
| 130326 | G-C | G-C(M-F), G(F-F), M | Burnished | Burnished |
| 130347 | G-C | G-C(H-F), L(H-F), G(F-M, H-F), M | Burnished | Burnished |
| 130355 | G-C | G-C(H-F), L(H-F), G(F-M, H-F), M | Burnished | Burnished |
| 130363 | G- | G-C(H-F), L(F-F), G(F-C, H-F), M | Burnished | Burnished |
| 130372 | G-G | G-C(H-F), L(F-F), G(F-M, H-F), M | Burnished | Burnished |
| 130404 | G | G-C(F-F), L(F-F), G(F-M, H-F), M | Burnished | Burnished |
| 130414 | G-C | G-C(H-F), L(H-F), G(F-M, H-F), M | Smoothed | Smoothed |
| 130421 | G-L | G-C(F-C, H-F), L(H-F), G(F-M, H-F), M | Burnished | Burnished |
| 130434 | G-G | G-C(H-F), L(H-F), G(F-M, H-F), M | Smoothed | Smoothed |
| 130437 | G-C | G-C(H-F), L(H-F), G(F-M, H-F), M | Smoothed | Smoothed |
| 130453 | G-G | G-C(F-F), L(F-M), G(F-M, H-F), M | Burnished | Burnished |
| 130463 | G-L | G-C(H-F), L(M-F), G(M-F), M | Burnished | Smoothed |
| 130465 | G | G-C(F-F), L(F-F), G(F-M, H-F), M | Burnished | Burnished |
| 130474 | G-L | G-C(H-F), L(H-F), G(F-M, H-F), M | Burnished | Smoothed |
| 130480 | O-C | O-C(H-F), L(H-F), G(F-M, H-F), M | Burnished | Smoothed |
| 130489 | G-L | G-C(H-F), L(F-F), G(H-F), M | Burnished | Burnished |
| 130490 | G-C | G-C(F-M, H-F), L(F-C, F-M), G(H-F), M | Burnished | Smoothed |
| 130501 | G-L | G-C(H-F), L(H-F), G(H-F), M | Burnished | Burnished |
| 130506 | G-L | G-C(H-F), L(H-F), G(H-F), M | Burnished | Burnished |
| 130518 | G-L | G-C(F-F), L(F-M, H-F), G(H-F), M | Burnished | Smoothed |
| 130525 | G-C+L | G-C(H-F), L(F-M, H-F), G(F-M, H-F), M | Burnished | Smoothed |
| 130527 | G-C | G-C(H-F), L(H-F), G(F-M, H-F), M | Burnished | Burnished |
| 130545 | G-G | G-C(H-F), L(F-F) G(F-M, F-F), M | Polished | Smoothed |
| 130565 | G-L | G-C(H-F), L(F-M, H-F), G(F-M, H-F), M | Burnished | Burnished |
| 130577 | G-C | G-C(H-F), L(H-F), G(F-M, H-F), M | Burnished | Burnished |
| 130581 | O-L | O-C(F-C, H-F), L(H-F, F-M), G(F-M), M | Burnished | Burnished |
| 130654 | G-C | G-C(H-F, H-M), L-G(H-F, F-M), M | Burnished | Smoothed |
| 130661 | G-G | G-C(M-F), L(M-F), G(H-F), M | Smoothed | Smoothed |
| 140218 | G-L | G-C(F-M, H-F), L(F-M, H-F), G(F-M, H-F), M | Burnished | Burnished |
| 140235 | G-G | G-C(H-F), L(H-F), G(F-M, H-F), M | Burnished | Burnished |

Figure 63. Descriptive Catalogue of BP3 bowls

| YH-No | Color/Out | Color/In | Color/Fabric-Core | Color / Paint | Decoration |
|---|---|---|---|---|---|
| 110185 | 7.5YR 7/3 | 7.5YR 7/3 | 7.5YR 8/4 | | |
| 110186 | 2.5YR 7/4 | 2.5YR 7/4 | N 5/0 | | |
| 110200 | 2.5YR 5/6 | 2.5YR 4/1 | 2.5YR 5/6 | | |
| 110509 | 5YR 6/6 | 5YR 6/6 | 5Y 7/2-N 4/0 | | |
| 110533 | 7.5YR 7/4 | 5YR 7/4 | 5YR 7/4 – N 5/0 | | |
| 110540 | 7.5Y 8/2-10YR 4/1 | 10YR 6/2 | 10YR 6/1 | | |
| 110550 | 10YR 6/1 | 10YR 3/1 | 7.5YR 5/4 - N 3/0 | | |
| 110593 | 7.5YR 7/4 | 7.5YR 7/4 | 7.5YR 7/6 – 2.5 Y 6/1 | | |
| 110603 | 5YR 7/4 | 2.5YR 7/6 | 10YR 4/2 | | |
| 110627 | 5Y 7/1 | 5Y 7/1 | 5Y 5/1 | | |
| 130316 | 2.5YR 6/4 | 2.5YR 6/4 | 2.5YR 7/4 – N 5/0 | | |
| 130324 | 5YR 7/4 | 5YR 7/4 | 5YR 6/6-N 5/0 | | |
| 130326 | 5YR 6/4 | 5YR 6/4 | N 3/0 | | |
| 130347 | 5YR 6/3 | 5YR 6/4 | 5YR 7/2-N 3/0 | | |
| 130355 | 5YR 6/4 | 5YR 6/4 | 5YR 7/3-N 5/0 | | |
| 130363 | 5YR 6/6 | 5YR 6/6 | 5YR 6/6-N 4/0 | | |
| 130372 | 2.5YR 6/4 | 5YR 6/4 | 2.5YR 6/4-N 4/0 | | |
| 130404 | 7.5YR 6/4-6/3 | 5YR 7/6 | 7.5YR 7/4 – N 5/0 | | |
| 130414 | 2.5YR 7/4 | 2.5YR 7/4 | 2.5YR 7/4-N 3/0 | | |
| 130421 | 5YR 7/4 | 5YR 7/4 | 2.5YR 7/4-N 6/0 | | |
| 130434 | 5YR 7/4 | 5YR 7/4 | 10YR 7/2 – N 6/0 | | |
| 130437 | 2.5Y 8/2 | 7.5YR 7/3 | 7.5YR 7/2-N 6/0 | | |
| 130453 | 5YR 7/4 | 5YR 7/4 | 5YR 7/4-N 5/0 | | |
| 130463 | 2.5Y 8/3 | 10YR 8/3 | 10YR 8/3-N 5/0 | | |
| 130465 | 5YR 8/4-7/3 | 5YR 8/4 | 10YR 7/3-N 5/0 | | |
| 130474 | 7.5YR 6/4 | 7.5YR 6/4 | N 5/0 | | |
| 130480 | 5YR 6/4 | 2.5YR 6/4 | 5YR 6/4 | | |
| 130489 | 7.5YR 7/4 | 7.5YR 7/4 | 7.5YR 8/4-N 5/0 | | |
| 130490 | 5YR 7/4 | 5YR 7/4 | 5YR 8/3 - 6/1 | | |
| 130501 | 7.5YR 5/1 | 7.5YR 5/1 | 7.5YR 8/4-N 5/0 | | |
| 130506 | 5YR 7/6 | 5YR 7/6 | 5YR 7/4-7/1 | | |
| 130518 | 7.5YR 7/6 | 7.5YR 7/4 | 7.5YR 6/6-N 4/0 | 5YR 4/1 | LineVert-RectFill |
| 130525 | 5YR 6/6 | 2.5YR 6/6 | 7.5YR 7/6-7.5Y 5/1 | 5YR 3/1 | LineVert-RectFill |
| 130527 | 5YR 7/4 | 5YR 7/4 | 5YR 8/4 – N 7/0 | 5YR 3/1 – 5YR 8/3 | LineVert |
| 130545 | 7.5YR 6/4 | 7.5YR 7/4 | 7.5YR 8/4-N 6/0 | 5YR 4/2 | Herringbone |
| 130565 | 5YR 7/4 | 5YR 7/4 | 5YR 7/6 – N 5/0 | 2.5YR 3/1 | LineVert |
| 130577 | 2.5YR 7/4 | 2.5YR 7/4 | 5YR 6/6-N 6/0 | 2.5YR 3/1 | LineVert |
| 130581 | 5YR 8/3 | 5YR 8/3 | 5YR 8/4 | 5YR 6/1 | LineVert-RectFill |
| 130654 | 5YR 7/4 | 10YR 7/3 | 5YR 7/4 – N 5/0 | 7.5YR 4/2 | Herringbone |
| 130661 | 2.5YR 6/6 | 2.5YR 6/6 | 2.5YR 6/6 | 7.5YR 5/2 | LineVert-RectFill |
| 140218 | 2.5YR 7/4 | 2.5YR 7/6 | 2.5YR 7/6-7.5YR 5/1 | 2.5YR 4/1 | LineVert |
| 140235 | 5YR 6/4 | 5YR 6/4 | 5YR 7/6 – N 4/0 | | |

Figure 64. Descriptive Catalogue of BP3 bowls[39]

[39] LineVert: Vertical Line(s); LineHorz: Horizontal Line(s); RectFill: Rectangular with solid fill;

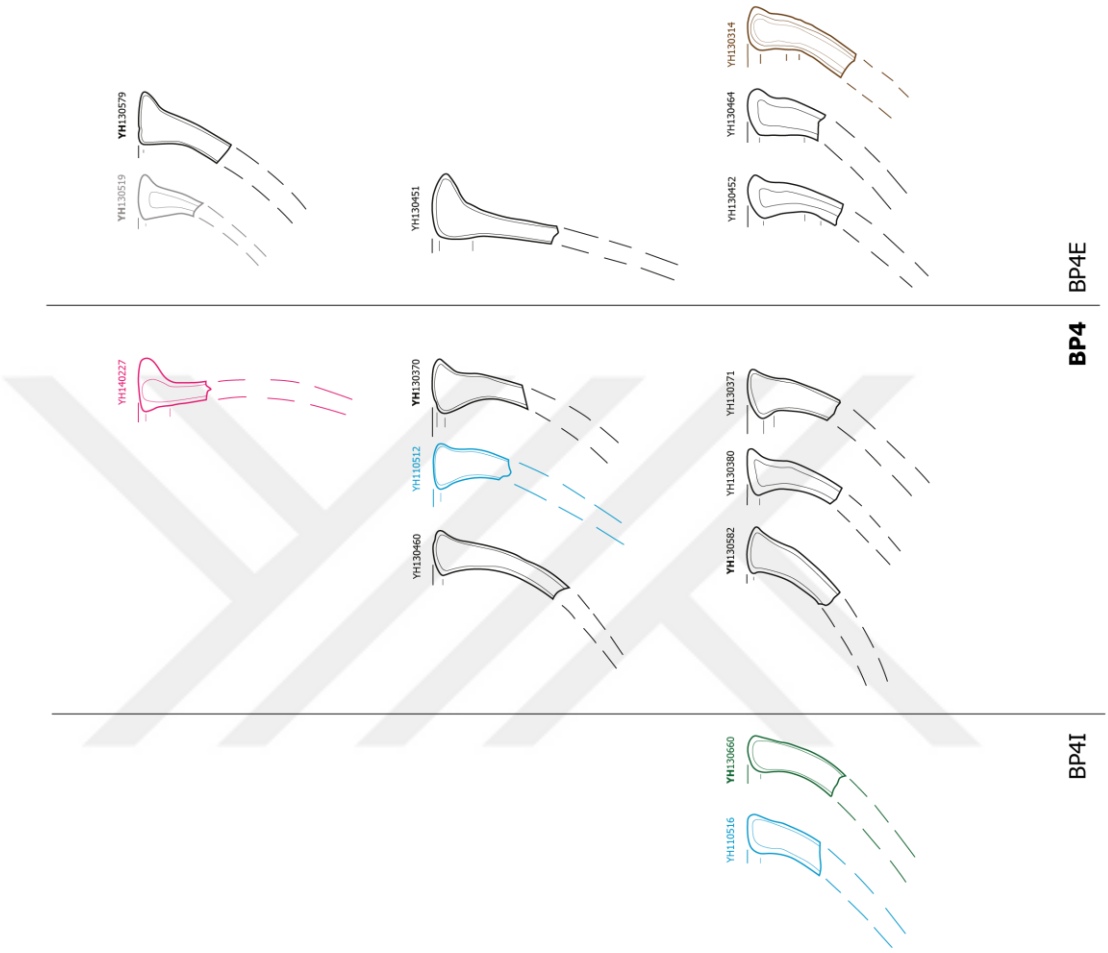


Figure 65. Summary of bowl type BP4

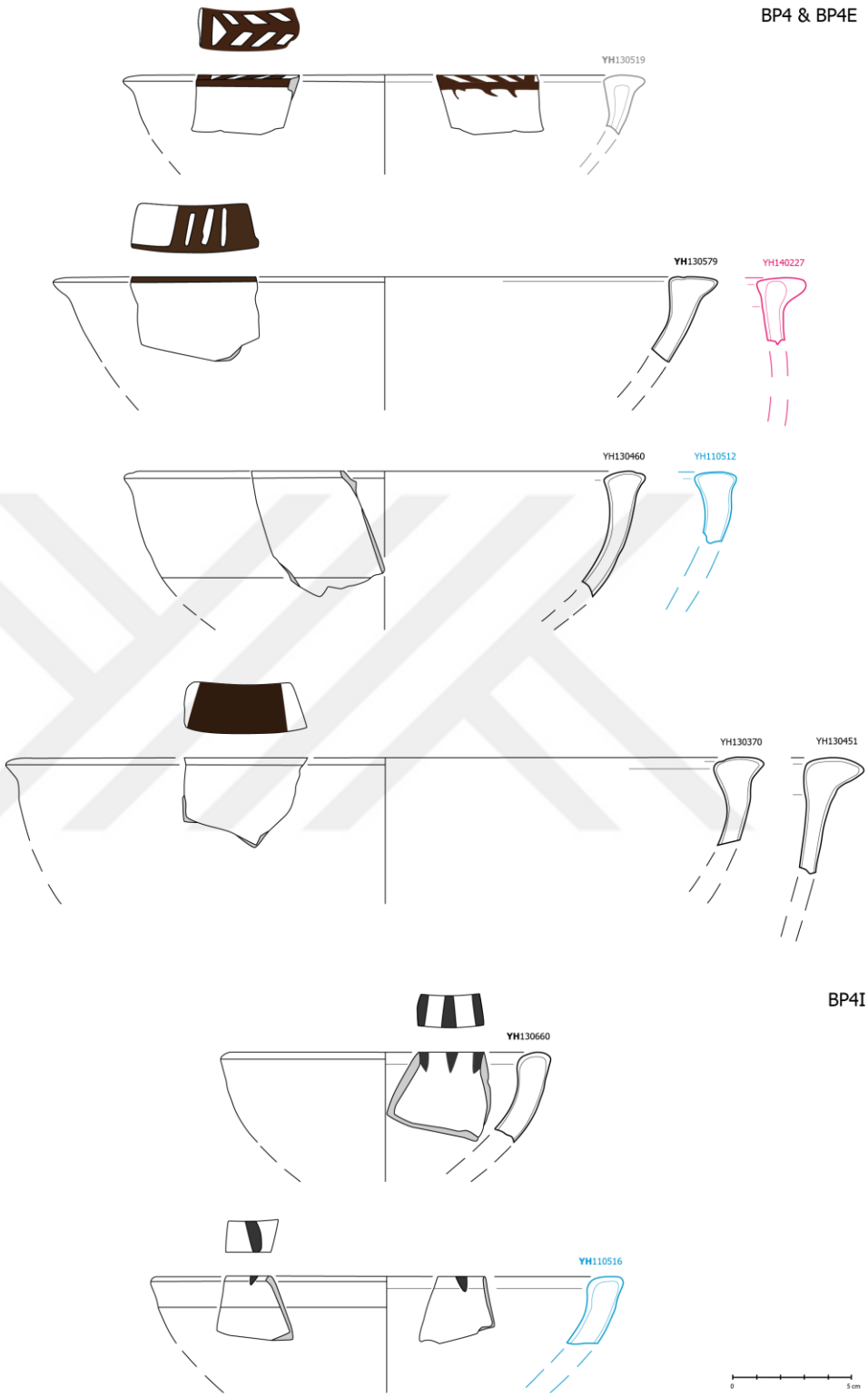


Figure 66. BP4 bowls

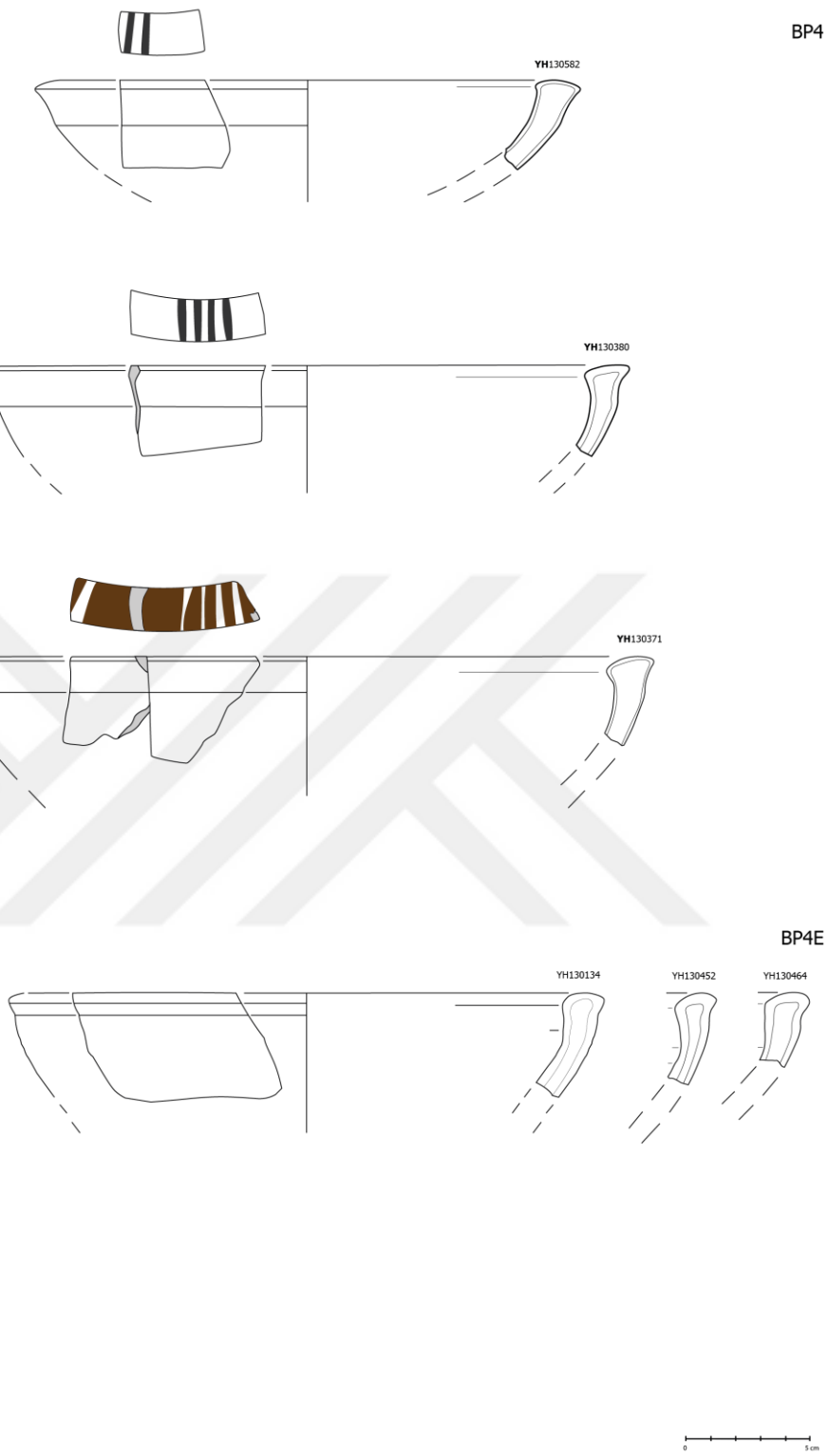


Figure 67. BP4 bowls

| YH-No | Area | Main Grid | Sub-Grid | PL | Deposit | Phase | Form-Main | Form Group | Main Type | Type | Diameter |
|---|---|---|---|---|---|---|---|---|---|---|---|
| 110512 | 1 | E8/ | d9 | 34 | P41 | I-9 | Bowl w plain rim | BP4 | T3 | B3 | 30-6% |
| 110516 | 1 | E8/ | d9 | 34 | P41 | I-9 | Bowl w plain rim | BP4I | T1 | B1 | 20-3% |
| 130314 | 1 | E8/ | d8 | 37 | R65 | I-10 | Bowl w plain rim | BP4E | T2 | B2 | 24-9% |
| 130370 | 1 | E8/ | d8 | 34 | R59 | I-11 | Bowl w plain rim | BP4 | T3 | B3 | 32-5% |
| 130371 | 1 | E8/ | d8 | 34 | R59 | I-11 | Bowl w plain rim | BP4 | T3 | B3 | 28-4% |
| 130380 | 1 | E8/ | d8 | 34 | R59 | I-11 | Bowl w plain rim | BP4 | T3 | B3 | 26-7% |
| 130451 | 1 | E8/ | d8 | 34 | R59 | I-11 | Bowl w plain rim | BP4E | T3 | B3 | 32-3% |
| 130452 | 1 | E8/ | d8 | 34 | R59 | I-11 | Bowl w plain rim | BP4E | T2 | B2 | 26-5% |
| 130460 | 1 | E8/ | d8 | 34 | R59 | I-11 | Bowl w plain rim | BP4 | T3 | B3 | 22-6% |
| 130464 | 1 | E8/ | d8 | 34 | R59 | I-11 | Bowl w plain rim | BP4E | T2 | B2 | 26-9% |
| 130519 | 1 | E8/ | d8 | 19 | P74 | I-9/I-10 | Bowl w plain rim | BP4E | T1 | B1 | 22-6% |
| 130579 | 1 | E8/ | d8 | 34 | R59 | I-11 | Bowl w plain rim | BP4E | T3 | B3 | 28-6% |
| 130582 | 1 | E8/ | d8 | 34 | R59 | I-11 | Bowl w plain rim | BP4 | T1 | B1 | 22-5% |
| 130660 | 1 | E8/ | d8 | 49 | R59 | I-11 | Bowl w plain rim | BP4I | T1 | B1 | 14-7% |
| 140227 | 1 | E8/ | d8 | 63 | P78 | I-9/I-10 | Bowl w plain rim | BP4 | T1 | B1 | 32-6% |

| YH-No | Fabric | CoreColor-Inclusion(Density+Size) | Surface/Out | Surface/In |
|---|---|---|---|---|
| 110512 | G-L | G-C(H-F), L(F-M, H-F), G(F-M, H-F), M | Smoothed | Smoothed |
| 110516 | G-C+L | G-C(H-F, H-M), L-G(H-F, F-M), M | Burnished | Burnished |
| 130314 | G-L | G-C(F-F), L(F-M, H-F), G(H-F), M | Burnished | Smoothed |
| 130370 | G-L | G-C(H-F), L(F-M, H-F), G(F-M, H-F), M | Burnished | Smoothed |
| 130371 | G-L | G-C(H-F), L(F-M, H-F), G(H-F), M | Burnished | Smoothed |
| 130380 | G-L | G-C(H-F), L(F-M, H-F), G(H-F), M | Burnished | Smoothed |
| 130451 | G-L | G-C(F-C, H-F), L(F-M, H-F), G(F-M, H-F), M | Smoothed | Smoothed |
| 130452 | G-L | G-C(H-F), L(F-C, F-M, H-F), G(F-M, H-F), M | Burnished | Smoothed |
| 130460 | G-L | G-C(H-F), L(H-M, H-F), G(F-M, H-F), M | Burnished | Smoothed |
| 130464 | G-L | G-C(H-F), L(H-M, H-F), G(F-M, H-F), M | Burnished | Smoothed |
| 130519 | G-L | G-C(F-C, H-F), L(F-M, H-F), G(F-M, H-F), M | Burnished | Smoothed |
| 130579 | G | G-C(F-F), L(H-F, F-M), G(F-M), M | Burnished | Burnished |
| 130582 | O-L | O-C(H-F), L(H-F), G(H-F), M | Burnished | Smoothed |
| 130660 | G-C+L | G-C(H-F, H-M), L-G(H-F, F-M), M | Burnished | Burnished |
| 140227 | G-L | G-C(H-F), L(F-M, H-F), G(H-F), M | Burnished | Smoothed |

| YH-No | Color/Out | Color/In | Color/Fabric-Core | Color / Paint | Decoration |
|---|---|---|---|---|---|
| 110512 | 10YR 7/2 | 2.5Y 8/3 | 7.5YR 8/4 – N 5/0 | | |
| 110516 | 5YR 6/6 | 5YR 6/6 | 5YR 7/6 – N 5/0 | 2.5YR 3/1 | LineVert |
| 130314 | 2.5YR 7/3 | 2.5YR 7/4 | 2.5YR 7/6-N 5/0 | | |
| 130370 | 7.5YR 8/4 | 7.5YR 8/4 | 5YR 8/4-N 5/0 | 2.5YR 3/1 | RectFill |
| 130371 | 7.5YR 7/3 | 7.5YR 8/3 | 2.5YR 7/3 – N 5/0 | 2.5YR 3/1 | LineVert-RectFill |
| 130380 | 5YR 7/1 | 5YR 7/4 | 2.5YR 7/3-N 5/0 | 2.5YR 3/1 | LineVert |
| 130451 | 7.5YR 8/3 | 7.5YR 8/3 | 2.5YR 7/6 – N 6/0 | | |
| 130452 | 7.5YR 8/3 | 2.5YR 7/6 | 2.5YR 7/6-N 6/0 | | |
| 130460 | 5YR 8/4 | 7.5YR 7/2 | 7.5YR 7/2-N 7/0 | | |
| 130464 | 2.5YR 7/4 | 2.5YR 7/6 | 2.5YR 7/6-N 6/0 | | |
| 130519 | 5YR 7/4 | 5YR 7/4 | 2.5YR 6/6 – 10YR 6/ | 5YR 3/1 | Herringbone |
| 130579 | 5YR 8/4 | 10YR 8/4 | 5YR 8/4-N 6/0 | 5YR 3/1 | LineVert-RectFill |
| 130582 | 7.5YR 7/4 | 7.5YR 7/4 | 7.5YR 7/6-N 4/0 | 7.5YR 5/1 | LineVert |
| 130660 | 2.5YR 7/4 | 2.5YR 6/6 | 2.5YR 7/6-N 3/0 | mark left | LineVert |
| 140227 | 7.5YR 6/6 | 7.5YR 7/4 | 5YR 6/6 – N 5/0 | | |

Figure 68. Descriptive Catalogue of BP4 bowls[40]

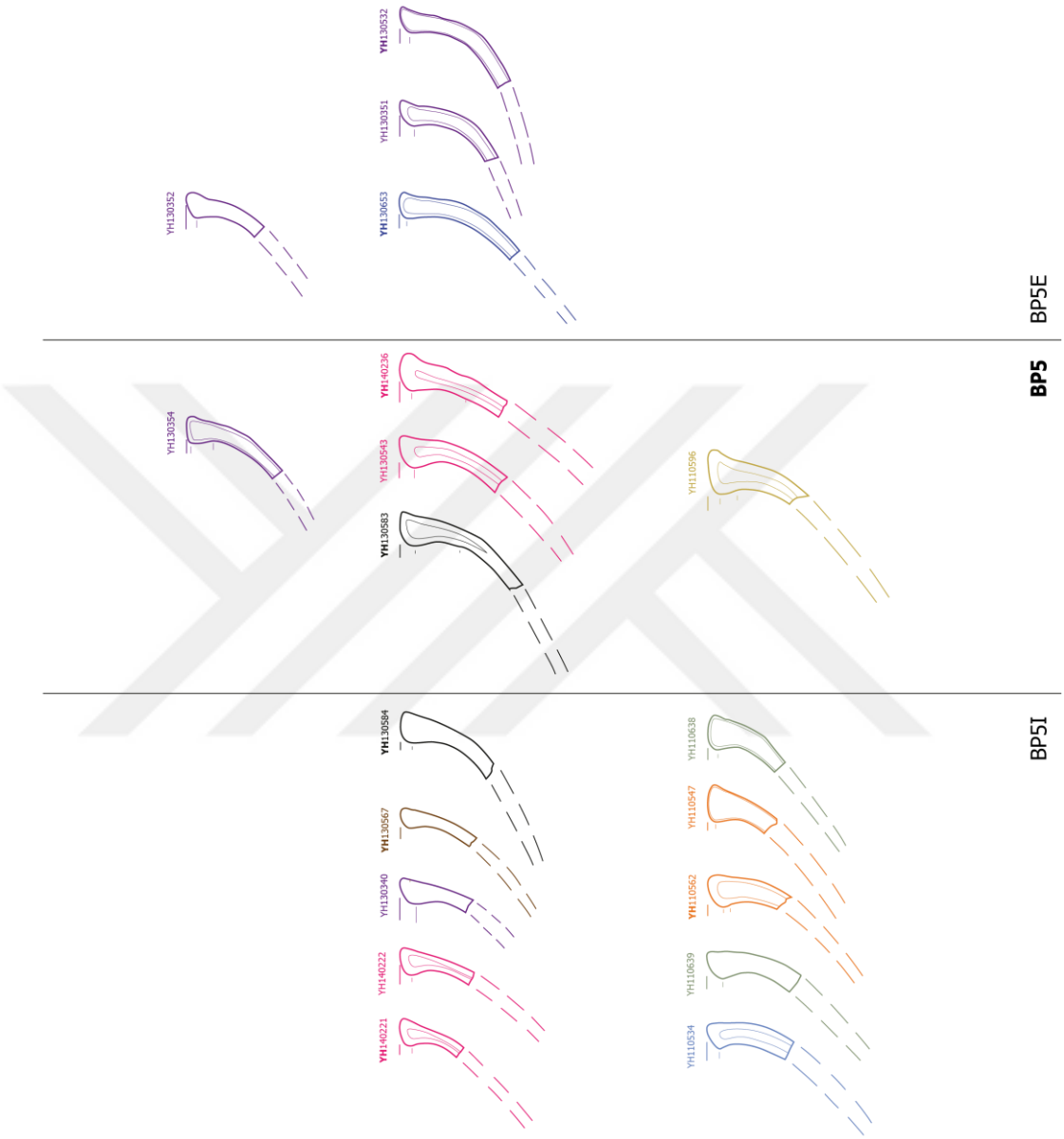


Figure 69. Summary of bowl type BP5

[40] LineVert: Vertical Line(s); RectFill: Rectangular with solid fill

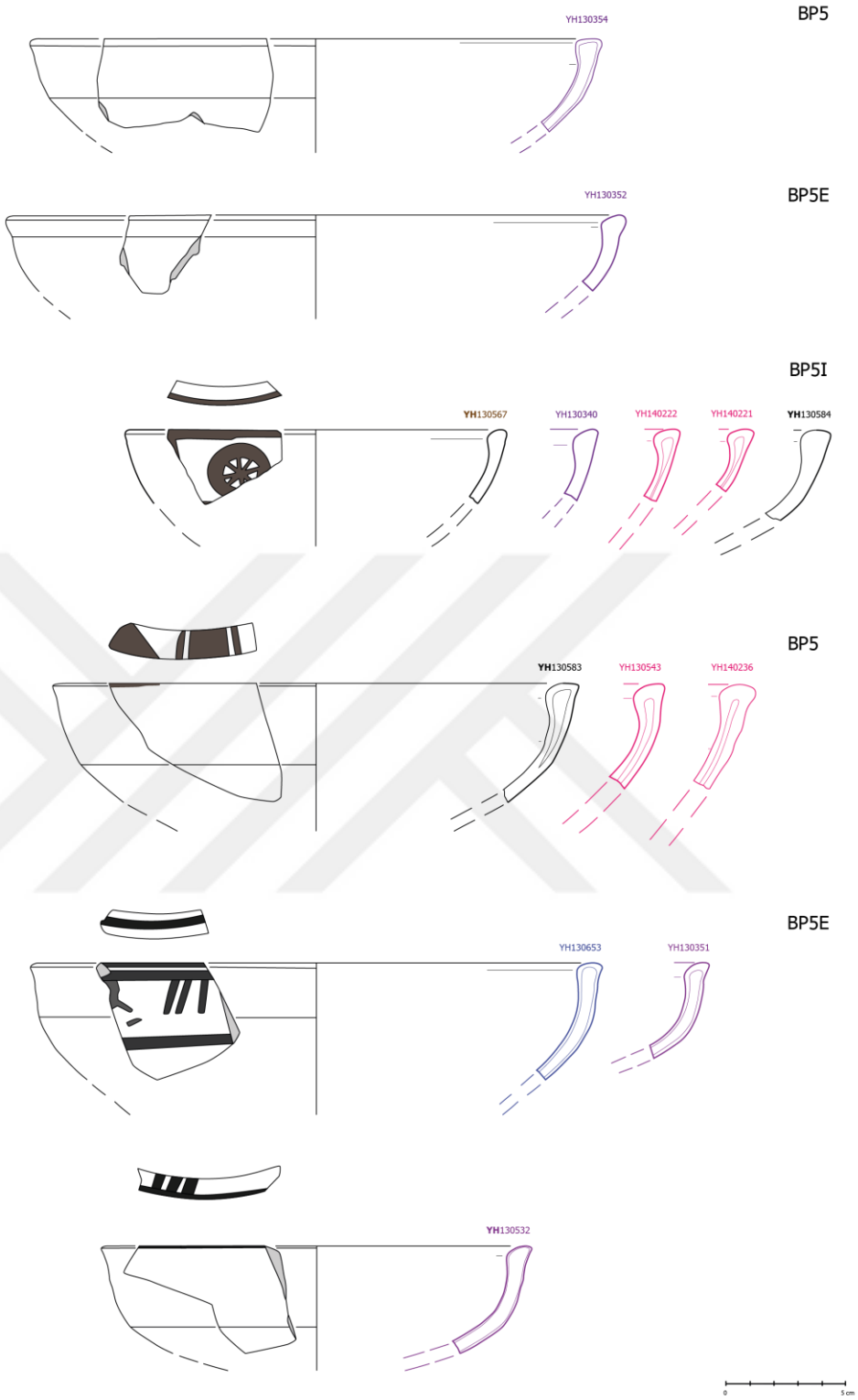


Figure 70. BP5 bowls

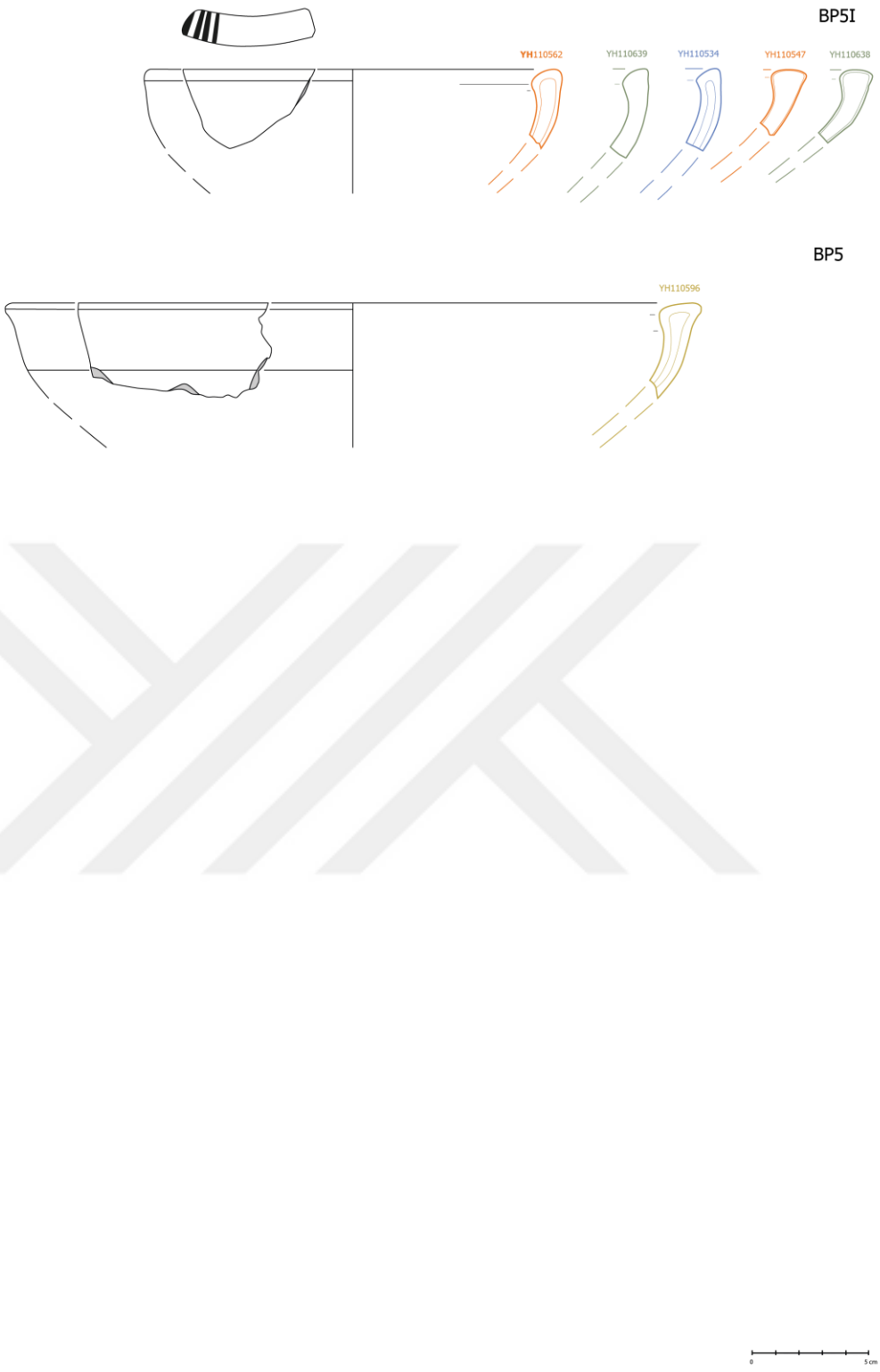


Figure 71. BP5 bowls

| YH-No | Area | Main Grid | Sub-Grid | PL | Deposit | Phase | Form-Main | Form Group | Main Type | Type | Diameter |
|---|---|---|---|---|---|---|---|---|---|---|---|
| 110534 | 1 | E 8/ | d9 | 36 | R33 | I-11 | Bowl w plain rim | BP5I | T1 | B1 | 20-3% |
| 110547 | 1 | E 8/ | f10 | 60 | P34 | I-9 | Bowl w plain rim | BP5I | T5 | B5 | 22-6% |
| 110562 | 1 | E 8/ | f10 | 60 | P34 | I-9 | Bowl w plain rim | BP5I | T1 | B1 | 18-10% |
| 110596 | 1 | E 8/ | f10 | 61 | P34 | I-9 | Bowl w plain rim | BP5 | T1 | B1 | 30-9% |
| 110638 | 1 | E 8/ | f10 | 62 | P34 | I-9 | Bowl w plain rim | BP5I | T1 | B1 | 24-7% |
| 110639 | 1 | E 8/ | f10 | 62 | P34 | I-9 | Bowl w plain rim | BP5I | T4 | B4 | 20-6% |
| 130340 | 1 | E 8/ | d8 | 28 | P87 | I-9/I-10 | Bowl w plain rim | BP5I | T1 | B1 | 26-7% |
| 130351 | 1 | E 8/ | d8 | 28 | P87 | I-9/I-10 | Bowl w plain rim | BP5E | T1 | B1 | 16-11% |
| 130352 | 1 | E 8/ | d8 | 28 | P87 | I-9/I-10 | Bowl w plain rim | BP5E | T1 | B1 | 26-5% |
| 130354 | 1 | E 8/ | d8 | 28 | P87 | I-9/I-10 | Bowl w plain rim | BP5 | T1 | B1 | 24-9% |
| 130532 | 1 | E 8/ | d8 | 28 | P87 | I-9/I-10 | Bowl w plain rim | BP5E | T1 | B1 | 18-11% |
| 130543 | 1 | E 8/ | d8 | 25 | P78 | I-9/I-10 | Bowl w plain rim | BP5 | T1 | B1 | 20-6% |
| 130567 | 1 | E 8/ | d8 | 37 | R65 | I-10 | Bowl w plain rim | BP5I | T4 | B4 | 16-10% |
| 130583 | 1 | E 8/ | d8 | 34 | R59 | I-11 | Bowl w plain rim | BP5 | T4 | B4 | 22-9% |
| 130584 | 1 | E 8/ | d8 | 34 | R59 | I-11 | Bowl w plain rim | BP5I | T4 | B4 | 22-9% |
| 130653 | 1 | E 8/ | d8 | 48 | R59 | I-11 | Bowl w plain rim | BP5E | T1 | B1 | 24-6% |
| 140221 | 1 | E 8/ | d8 | 63 | P78 | I-9/I-10 | Bowl w plain rim | BP5I | T1 | B1 | 16-7% |
| 140222 | 1 | E 8/ | d8 | 63 | P78 | I-9/I-10 | Bowl w plain rim | BP5I | T1 | B1 | 20-6% |
| 140236 | 1 | E 8/ | d8 | 63 | P78 | I-9/I-10 | Bowl w plain rim | BP5 | T1 | B1 | 26-9% |

| YH-No | Fabric | CoreColor-Inclusion(Density+Size) | Surface/Out | Surface/In |
|---|---|---|---|---|
| 110534 | G-C+L | G-C(H-F), L(F-M, H-F), G(F-M, H-F), M | Smoothed | Smoothed |
| 110547 | O-G | O-C(F-F), L(F-F) G(H-F), M | Burnished | Smoothed |
| 110562 | G-L | G-C(F-C, H-F), L(F-M, H-F), G(H-F), M | Burnished | Smoothed |
| 110596 | G-G | G-C(H-M, H-F), L(H-F) G(F-M, H-F), M | Burnished | Burnished |
| 110638 | G-C+G | G-C(F-M, H-F), L(H-F) G(F-M, H-F), M | Burnished | Burnished |
| 110639 | G | G-C(F-F), L(F-F), G(F-M, H-F), M | Burnished | Burnished |
| 130340 | G-L | G-C(F-M, H-F), L(F-M, H-F), G(F-M, H-F), M | Burnished | Burnished |
| 130351 | G-L | G-C(H-F), L(F-M, H-F), G(H-F), M | Burnished | Burnished |
| 130352 | G-C | G-C(H-F), L(H-F), G(H-F), M | Burnished | Burnished |
| 130354 | G-L | G-C(H-F), L(F-M, H-F), G(H-F), M | Burnished | Burnished |
| 130532 | G-L | G-C(H-F), L(H-F, F-M), G(H-F), M | Burnished | Burnished |
| 130543 | G | G-C(H-F), L(F-M, H-F), G(F-M, H-F), M | Burnished | Burnished |
| 130567 | O | O-C(F-F), L(F-F), G(F-F), M | Burnished | Burnished |
| 130583 | O-L | O-C(H-F), L(H-F, F-M), G(H-F), M | Burnished | Burnished |
| 130584 | O-L | O-C(H-F), L(H-F, F-M), G(H-F), M | Burnished | Burnished |
| 130653 | G-L | G-C(F-M, H-F), L(F-M, H-F), G(F-M, H-F), M | Burnished | Burnished |
| 140221 | G | G-C(H-F), L(H-F), G(F-C, H-F), M | Smoothed | Smoothed |
| 140222 | G | G-C(F-M, H-F), L(F-M, H-F), G(F-C, H-F), M | Smoothed | Smoothed |
| 140236 | G | G-C(H-F), L(H-F), G(H-M&F), M | Smoothed | Smoothed |

Figure 72. Descriptive Catalogue of BP5 bowls

| YH-No | Color/Out | Color/In | Color/Fabric-Core | Color / Paint | Decoration |
|---|---|---|---|---|---|
| 110534 | 5YR 7/4 | 5YR 7/4 | 5YR 7/6-N 4/0 | | |
| 110547 | 2.5Y 8/3 | 2.5Y 5/1 | 7.5YR 7/4 | | |
| 110562 | 5YR 6/6 | 5YR 6/4 | 5YR 6/6-N 5/0 | | |
| 110596 | 2.5Y 4/1-10YR 6/3 | 10YR 5/2-7/3 | 10YR 7/4-2.5Y 6/1 | | |
| 110638 | 2.5YR 6/6 | 2.5YR 6/6 | 5YR 6/6 – N 4/0 | | |
| 110639 | 5YR 4/1-6/2 | 5YR 4/1-6/2 | 7.5YR 6/3 | | |
| 130340 | 2.5YR 6/4 | 2.5YR 6/4 | 2.5YR 5/6 | | |
| 130351 | 2.5YR 6/6 | 2.5YR 6/6 | 2.5YR 7/4-N 6/0 | | |
| 130352 | 7.5YR 6/3 | 7.5YR 5/1 | 7.5YR 3/1 | | |
| 130354 | 7.5YR 6/4 | 7.5YR 6/4 | 7.5YR 7/3-N 5/0 | | |
| 130532 | 7.5YR 6/4 | 7.5YR 6/4 | 7.5YR 7/3-N 5/0 | 5YR 5/1 | LineVert |
| 130543 | 5YR 7/4 | 7.5YR 6/4 | 7.5YR 7/4-N 6/0 | | |
| 130567 | 5YR 7/3 | 5YR 7/3 | 5YR 7/6 | 5YR 4/1 | LineHorz-CircleWithStar |
| 130583 | 2.5YR 8/3-5YR 8/3 | 7.5YR 8/3 | 5YR 7/6 | 5YR 6/1 | LineVert-RectFill |
| 130584 | 10YR 8/2 | 10YR 8/3 | 2.5YR 7/6 | 2.5YR 4/1 | LineVert |
| 130653 | 7.5YR 7/6 | 7.5YR 7/4 | 7.5YR 8/6-N 5/0 | 7.5YR 2/1 | LineDiag-LineHorz |
| 140221 | 7.5YR 6/4 | 7.5YR 6/4 | 7.5YR 7/6- N 5/0 | | |
| 140222 | 5YR 7/4 | 5YR 7/4 | 5YR 7/6 – N 5/0 | | |
| 140236 | 7.5YR 6/4 | 7.5YR 6/4 | 10YR 7/3-7.5Y 6/1 | | |

Figure 73. Descriptive Catalogue of BP5 bowls[41]

[41] LineVert: Vertical Line(s); LineHorz: Horizontal Line(s); LineDiag: Diagonal Line(s); RectFill: Rectangular with solid fill; CircleWithStar: A star motif within a circle

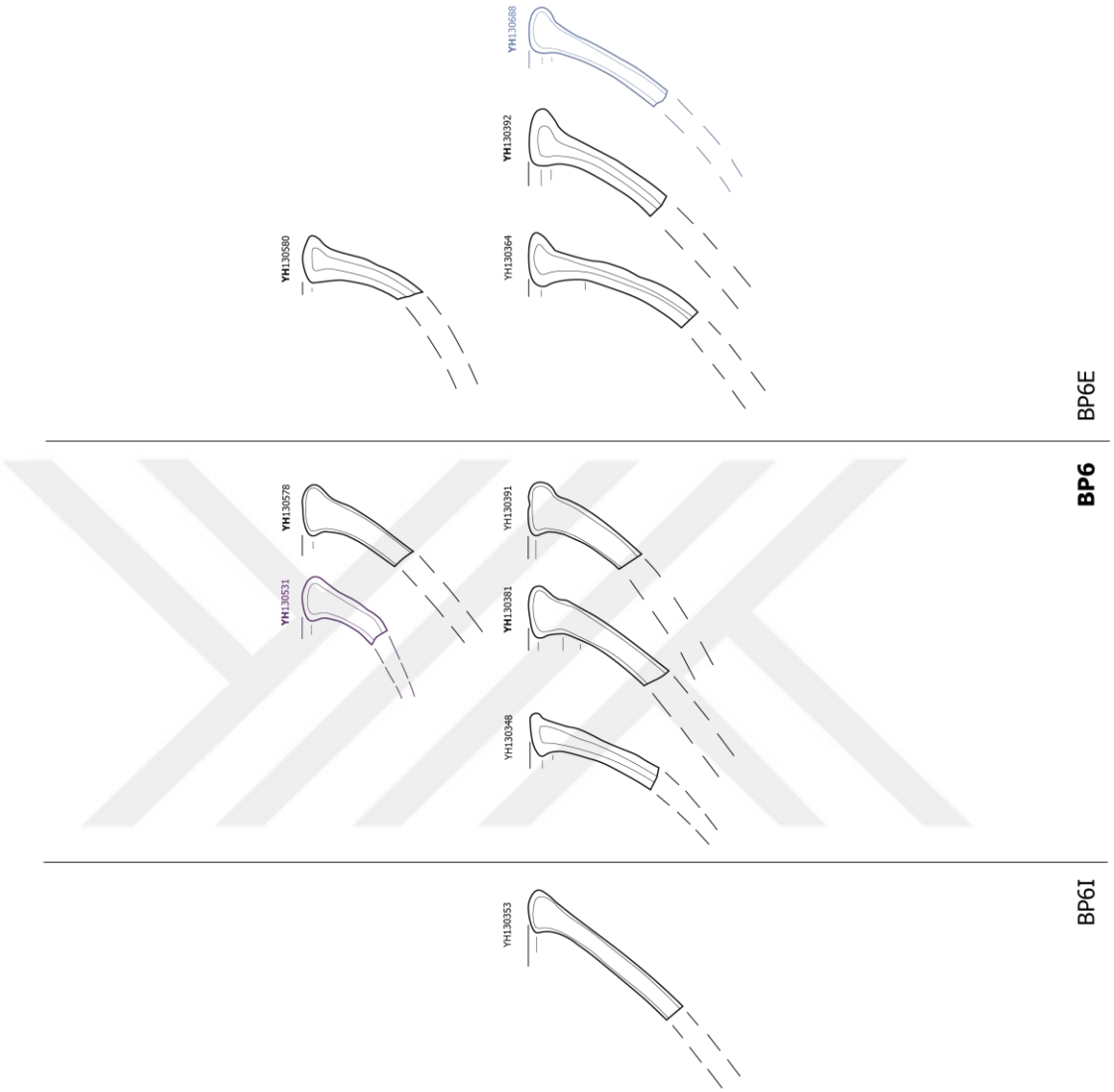


Figure 74. Summary of bowl type BP6

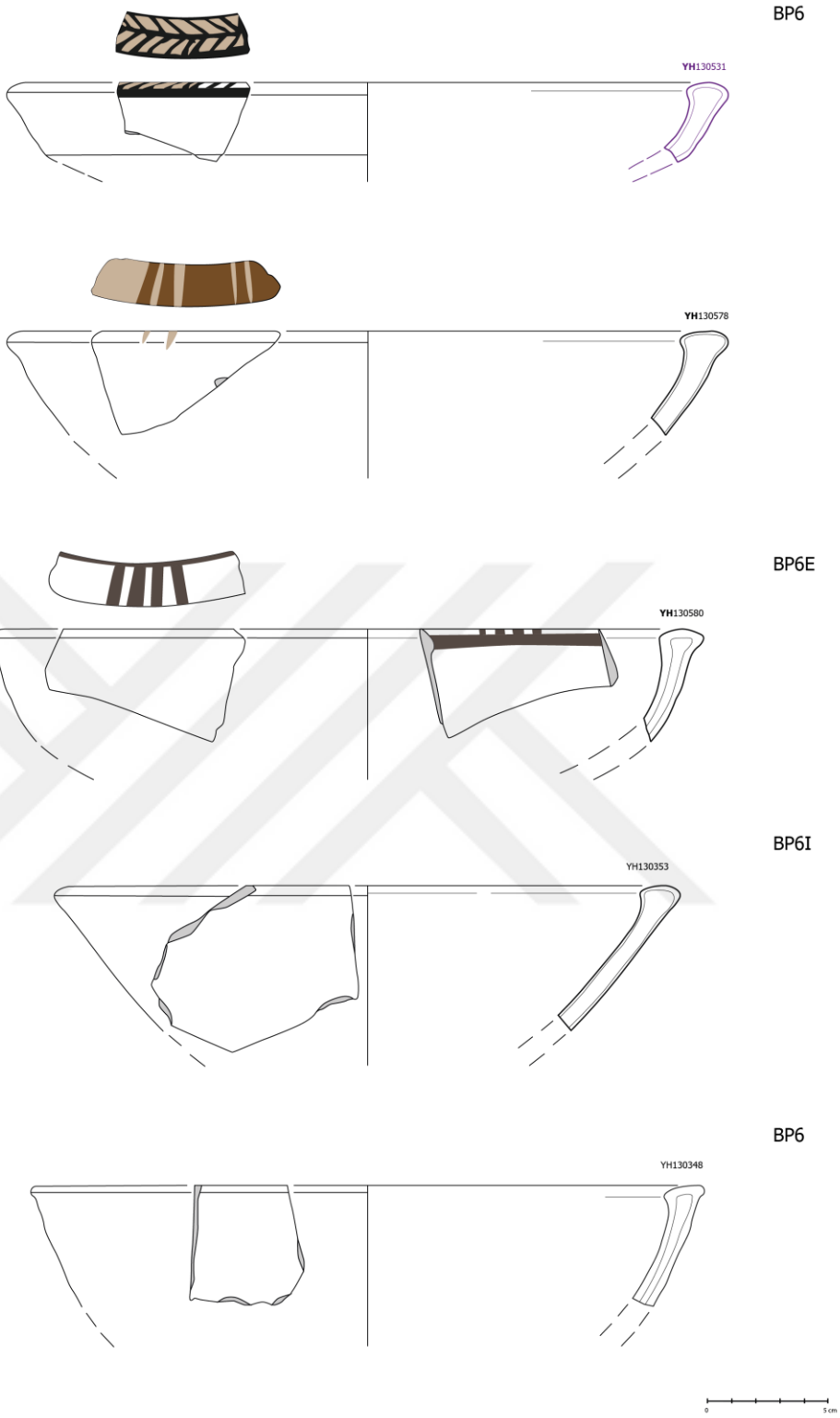


Figure 75. BP6 bowls

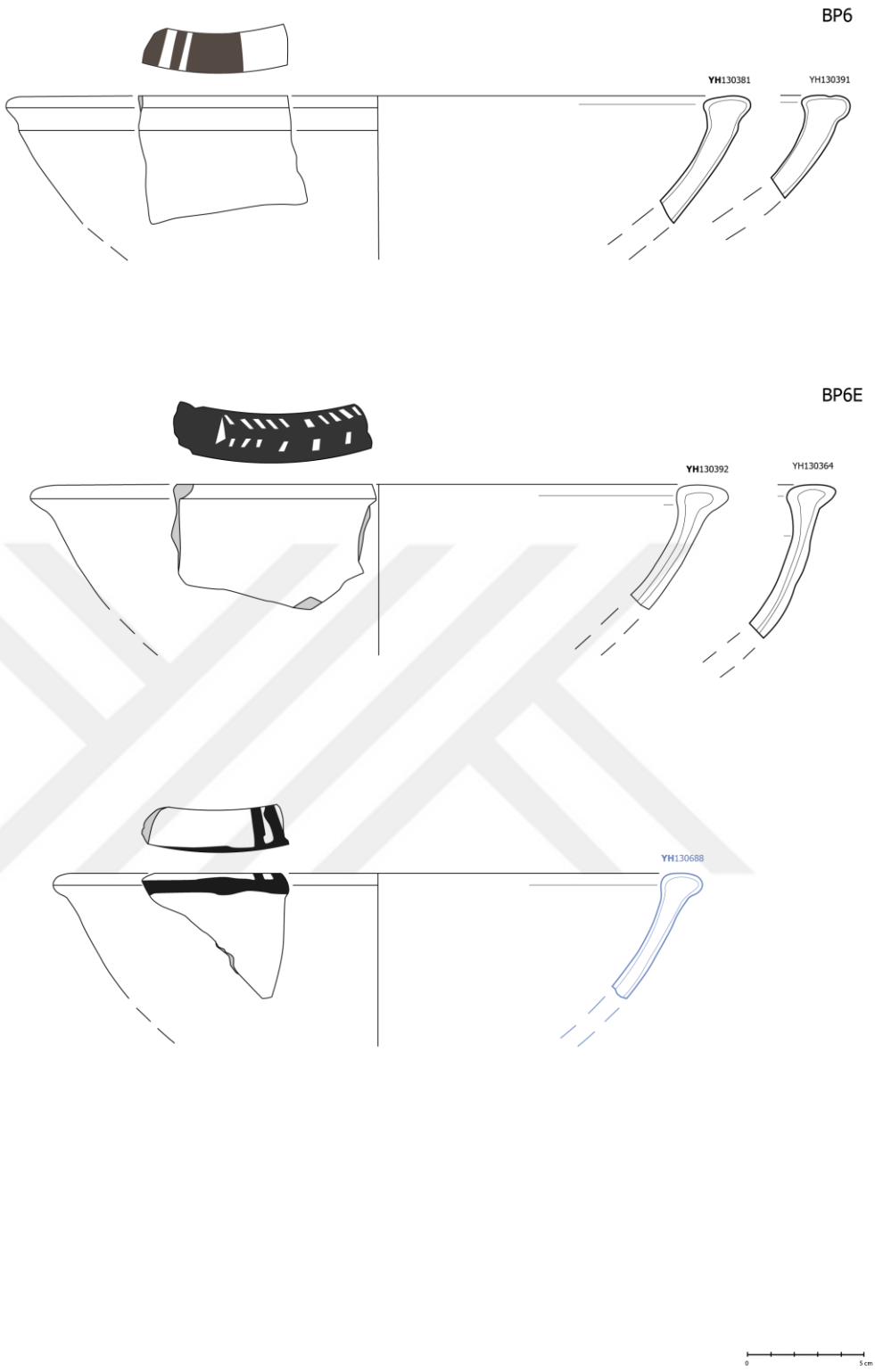


Figure 76. BP6 bowls

| YH-No | Area | Main Grid | Sub-Grid | PL | Deposit | Phase | Form-Main | Form Group | Main Type | Type | Diameter |
|---|---|---|---|---|---|---|---|---|---|---|---|
| 130348 | 1 | E 8/ | d8 | 28 | P87 | I-9/I-10 | Bowl w plain rim | BP6 | T1 | B1 | 28-4% |
| 130353 | 1 | E 8/ | d8 | 28 | P87 | I-9/I-10 | Bowl w plain rim | BP6I | T1 | B1 | 26-5% |
| 130364 | 1 | E 8/ | d8 | 34 | R59 | I-11 | Bowl w plain rim | BP6E | T1 | B1 | 36-8% |
| 130381 | 1 | E 8/ | d8 | 34 | R59 | I-11 | Bowl w plain rim | BP6 | T1 | B1 | 32-7% |
| 130391 | 1 | E 8/ | d8 | 34 | R59 | I-11 | Bowl w plain rim | BP6 | T1 | B1 | 28-5% |
| 130392 | 1 | E 8/ | d8 | 34 | R59 | I-11 | Bowl w plain rim | BP6E | T1 | B1 | 30-9% |
| 130531 | 1 | E 8/ | d8 | 28 | P87 | I-9/I-10 | Bowl w plain rim | BP6 | T1 | B1 | 30-6% |
| 130578 | 1 | E 8/ | d8 | 34 | R59 | I-11 | Bowl w plain rim | BP6 | T3 | B3 | 30-9% |
| 130580 | 1 | E 8/ | d8 | 34 | R59 | I-11 | Bowl w plain rim | BP6E | T3 | B3 | 28-9% |
| 130688 | 1 | E 8/ | d8 | 54 | R33 | I-11 | Bowl w plain rim | BP6E | T2 | B2 | 28-7% |

| YH-No | Fabric | CoreColor-Inclusion(Density+Size) | Surface/Out | Surface/In |
|---|---|---|---|---|
| 130348 | G-C | G-C(F-C,H-M&F), L(H-F), G(F-M, H-F), M | Burnished | Burnished |
| 130353 | G-C | G-C(F-C,H-M&F), L(H-F), G(F-M, H-F), M | Burnished | Burnished |
| 130364 | G-C | G-C(F-M, H-F), L(H-F), G(F-M, H-F), M | Burnished | Smoothed |
| 130381 | G-L | G-C(H-F), L(H-F), G(F-M, H-F), M | Burnished | Smoothed |
| 130391 | G-L | G-C(H-F), L(H-F), G(F-M, H-F), M | Burnished | Smoothed |
| 130392 | G-C+L | G-C(H-F), L(H-F), G(H-F), M | Burnished | Smoothed |
| 130531 | G-L | G-C(H-F), L(H-F, F-M), G(H-F, F-M), M | Burnished | Smoothed |
| 130578 | G-C+L | G-C(F-C, H-F), L(H-F, F-M), G(H-F), M | Burnished | Smoothed |
| 130580 | G-L | G-C(F-C, H-F), L(H-F), G(H-F), M | Burnished | Smoothed |
| 130688 | G-L | G-C(H-F, H-M), L (F-C, H-F), G(H-F), M | Burnished | Burnished |

| YH-No | Color/Out | Color/In | Color/Fabric-Core | Color / Paint | Decoration |
|---|---|---|---|---|---|
| 130348 | 2.5YR 6/6 | 7.5YR 6/4 | 2.5YR 7/3-N 5/0 | | |
| 130353 | 7.5YR 6/6 | 7.5YR 5/4 | 7.5YR 6/4-N 4/0 | | |
| 130364 | 5YR 7/4 | 5YR 6/4 | 10YR 6/2-N 5/0 | | |
| 130381 | 7.5YR 6/4 | 7.5YR 7/4 | 7.5YR 8/4-N 4/0 | 2.5YR 3/1 | LineVert-RectFill |
| 130391 | 5YR 6/6 | 10YR 7/3 | 7.5YR 6/4 | | |
| 130392 | 5YR 6/4 | 5YR 6/4 | 10YR 7/3-N 4/0 | 2.5YR 3/1 | Herringbone |
| 130531 | 5YR 8/3-7/4 | 5YR 7/3 | 5YR 8/4-N 5/0 | 5YR 2/1 | Herringbone-LineHorz |
| 130578 | 7.5YR 8/3 | 7.5YR 7/4 | 7.5YR 8/4-N 5/0 | 2.5Y 8/2 | LineVert-RectFill |
| 130580 | 2.5Y 8/2 | 2.5Y 8/3 | 2.5YR 7/3-N 7/0 | 2.5YR 4/1 | LineVert-LineHorz |
| 130688 | 5YR 8/4 | 2.5YR 7/6 | 2.5YR 7/6-N 6/0 | 2.5YR 2/1 | LineVert-LineHorz |

Figure 77. Descriptive Catalogue of BP6 bowls[42]

[42] LineVert: Vertical Line(s); LineHorz: Horizontal Line(s); RectFill: Rectangular with solid fill

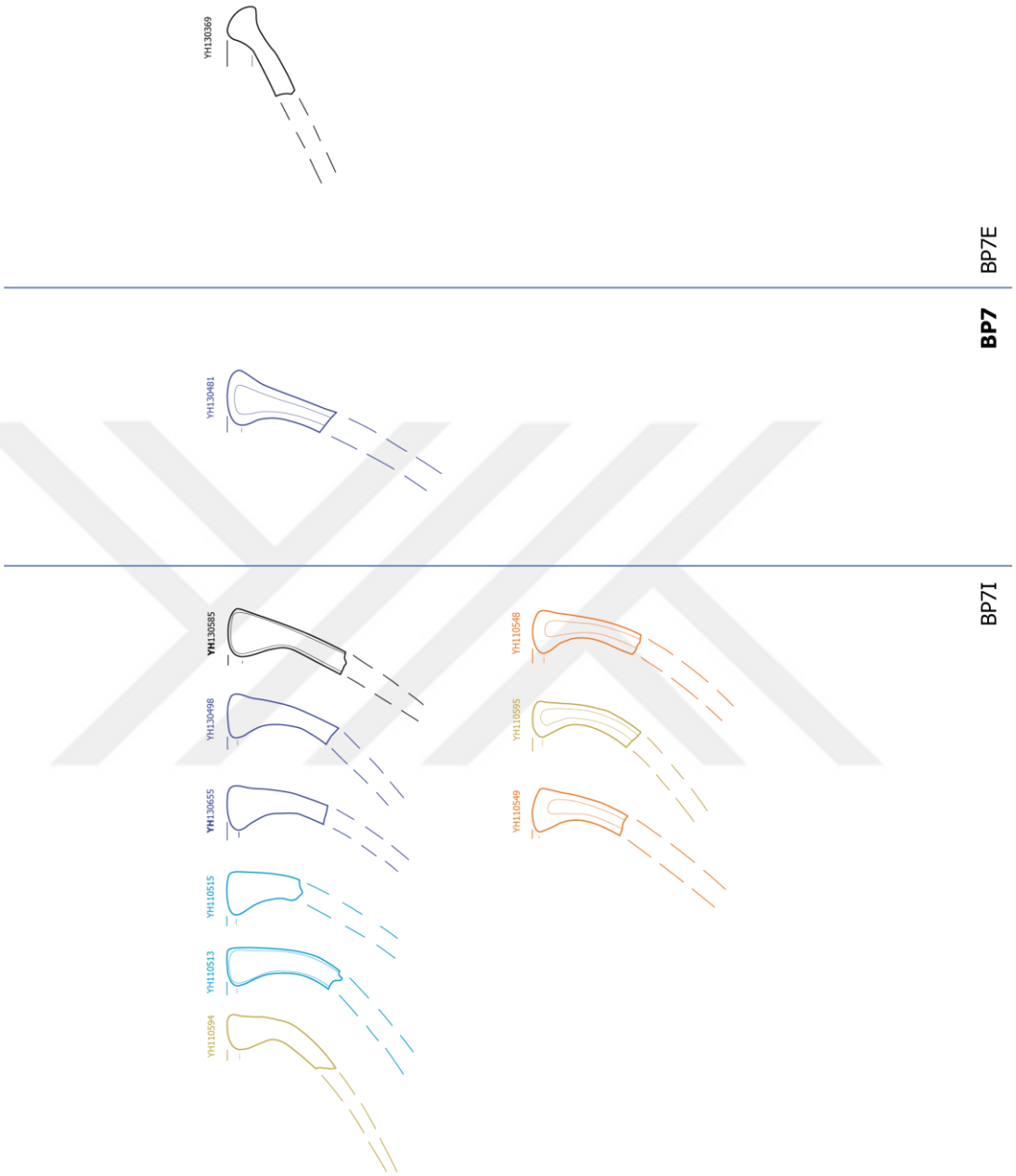


Figure 78. Summary of bowl type BP7

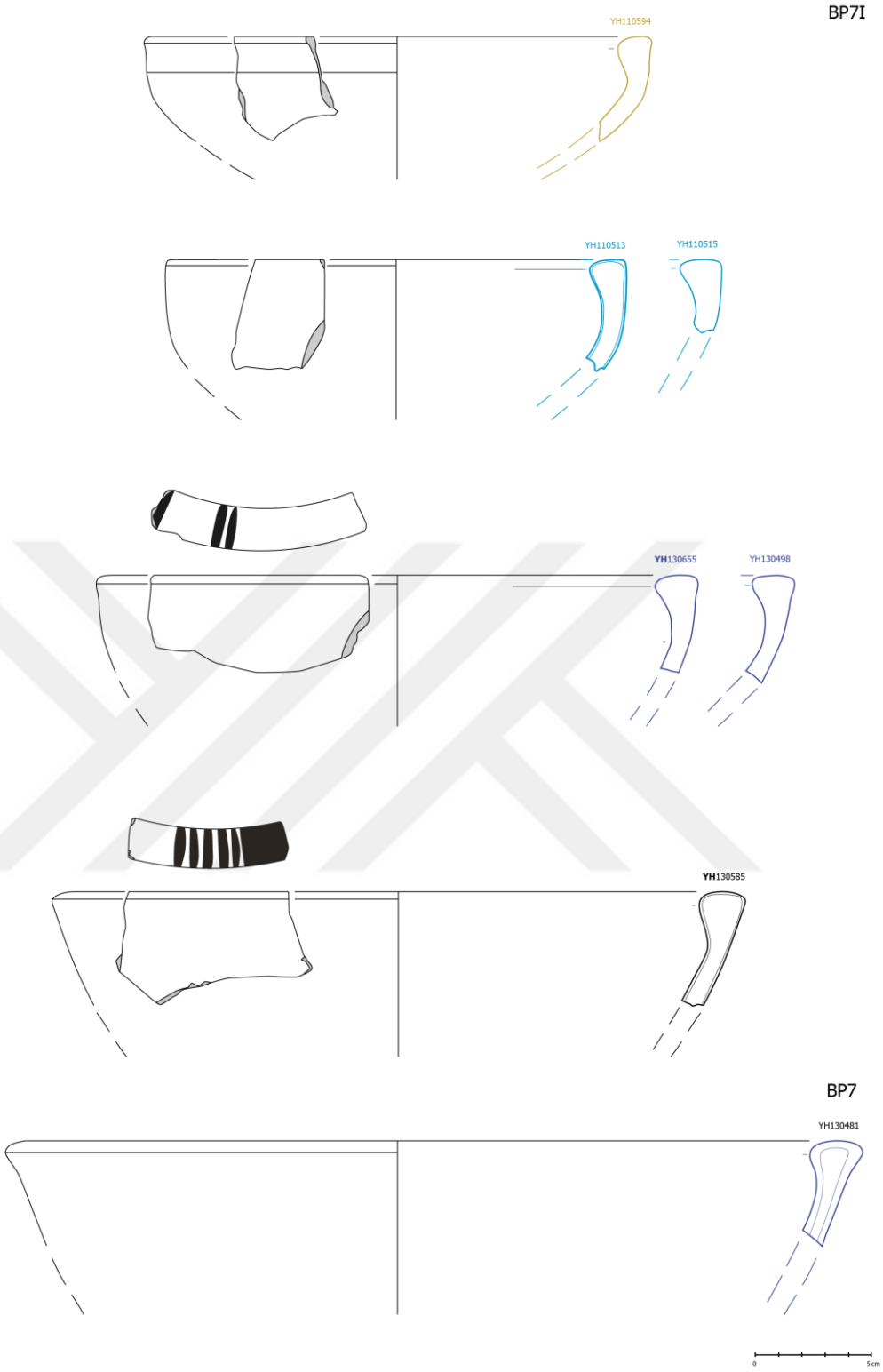


Figure 79. BP7 bowls

Figure 80. BP7 bowls

| YH-No | Area | Main Grid | Sub-Grid | PL | Deposit | Phase | Form-Main | Form Group | Main Type | Type | Diameter |
|---|---|---|---|---|---|---|---|---|---|---|---|
| 110513 | 1 | E 8/ | d9 | 34 | P41 | I-9 | Bowl w plain rim | BP7I | T1 | B1 | 20-5% |
| 110515 | 1 | E 8/ | d9 | 34 | P41 | I-9 | Bowl w plain rim | BP7I | T3 | B3 | 32-10% |
| 110548 | 1 | E 8/ | f10 | 60 | P34 | I-9 | Bowl w plain rim | BP7I | T1 | B1 | 28-6% |
| 110549 | 1 | E 8/ | f10 | 60 | P34 | I-9 | Bowl w plain rim | BP7I | T1 | B1 | 32-7% |
| 110594 | 1 | E 8/ | f10 | 61 | P34 | I-9 | Bowl w plain rim | BP7I | T4 | B4 | 22-5% |
| 110595 | 1 | E 8/ | f10 | 61 | P34 | I-9 | Bowl w plain rim | BP7I | T3 | B3 | 24-6% |
| 130369 | 1 | E 8/ | d8 | 34 | R59 | I-11 | Bowl w plain rim | BP7E | T4 | B4 | 28-7% |
| 130481 | 1 | E 8/ | d8 | 48 | R59 | I-11 | Bowl w plain rim | BP7 | T3 | B3 | 40-8% |
| 130498 | 1 | E 8/ | d8 | 48 | R59 | I-11 | Bowl w plain rim | BP7I | T4 | B4 | 24-7% |
| 130585 | 1 | E 8/ | d8 | 34 | R59 | I-11 | Bowl w plain rim | BP7I | T3 | B3 | 30-8% |
| 130655 | 1 | E 8/ | d8 | 48 | R59 | I-11 | Bowl w plain rim | BP7I | T4 | B4 | 26-12% |

| YH-No | Fabric | CoreColor-Inclusion(Density+Size) | Surface/Out | Surface/In |
|---|---|---|---|---|
| 110513 | G-L | G-C(H-F), L(H-F), G(H-F), M | Burnished | Burnished |
| 110515 | G-L | G-C(H-F), L(F-C, H-M, H-F), G(H-F), M | Smoothed | Smoothed |
| 110548 | G-G | G-C(H-F), L(H-F), G(F-M, H-F), M | Burnished | Burnished |
| 110549 | G-G | G-C(H-F), L(H-F), G(F-M, H-F), M | Burnished | Burnished |
| 110594 | O | O-C(H-F), L(H-F), G(H-F), M | Burnished | Smoothed |
| 110595 | G-G | G-C(H-F), L(H-F) G(F-M, H-F), M | Burnished | Smoothed |
| 130369 | O-L | O-C(H-F), L(F-M, H-F), G(H-F), M | Burnished | Smoothed |
| 130481 | G-L | G-C(H-F), L(H-F, F-M, F-C), G(H-F), M | Burnished | Burnished |
| 130498 | O-G | O-C(H-F), L(F-M, H-F), G(H-F, H-M, F-C), M | Burnished | Smoothed |
| 130585 | G-L | G-C(H-F), L(H-F, F-M), G(H-F), M | Burnished | Smoothed |
| 130655 | O-G | O-C(H-F), L(H-F), G(H-F, H-M), M | Smoothed | Smoothed |

| YH-No | Color/Out | Color/In | Color/Fabric-Core | Color / Paint | Decoration |
|---|---|---|---|---|---|
| 110513 | 7.5YR 6/3 | 10YR 6/3 | 10YR 8/3-N 5/0 | | |
| 110515 | 5YR 8/4-5Y 8/1 | 2.5YR 7/6-5Y 5/1 | 2.5YR 7/6- N 6/0 | | |
| 110548 | 7.5YR 8/4 | 7.5YR 8/4 | 7.5YR 6/6-2.5Y 5/1 | | |
| 110549 | 7.5YR 8/6 | 5YR 8/4 | 5YR 7/6-2.5Y 6/2 | | |
| 110594 | 10YR 7/4 | 2.5Y 8/3 | 7.5YR 7/6 | | |
| 110595 | 10YR 7/4 | 5YR 6/6 | 5YR 7/6-5Y 6/1 | | |
| 130369 | 2.5Y 8/3 | 7.5YR 7/4 | 7.5YR 7/4 | | |
| 130481 | 10YR 7/2 | 7.5YR 8/3 | 7.5YR 7/4 – N 6/0 | | |
| 130498 | 2.5Y8/2 | 7.5YR 8/2 | 2.5YR 6/2 | | |
| 130585 | 5Y 8/2 | 2.5YR 7/1 | 2.5YR 6/6-7.5YR 7/2 | 7.5YR 4/1 | LineVert-RectFill |
| 130655 | 7.5Y 8/3 | 2.5Y 8/3 | 2.5YR 6/6 | 7.5YR 2/1 | LineVert |

Figure 81. Descriptive Catalogue of BP7 bowls[43]

[43] LineVert: Vertical Line(s); RectFill: Rectangular with solid fill

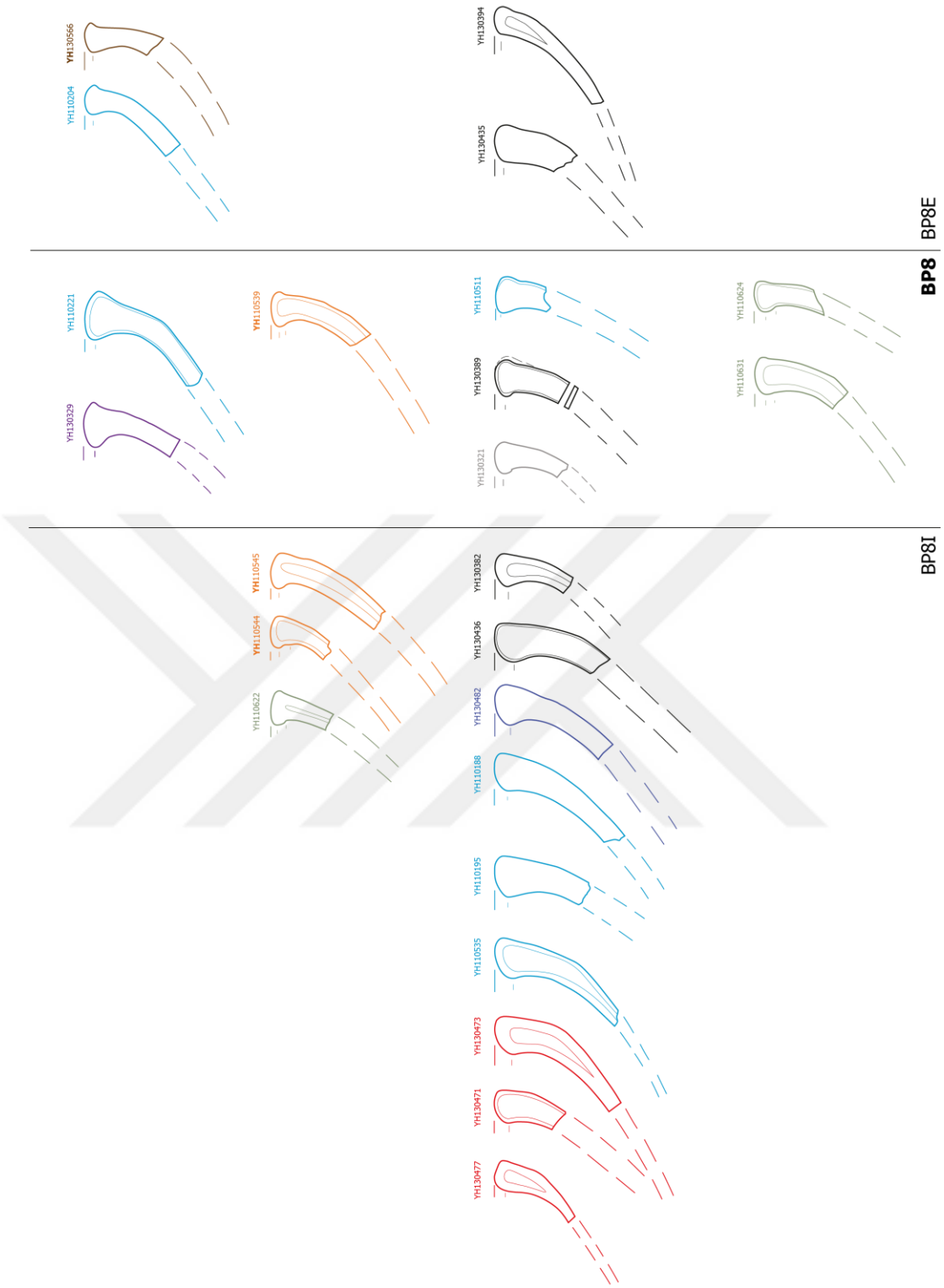


Figure 82. Summary of bowl type BP8

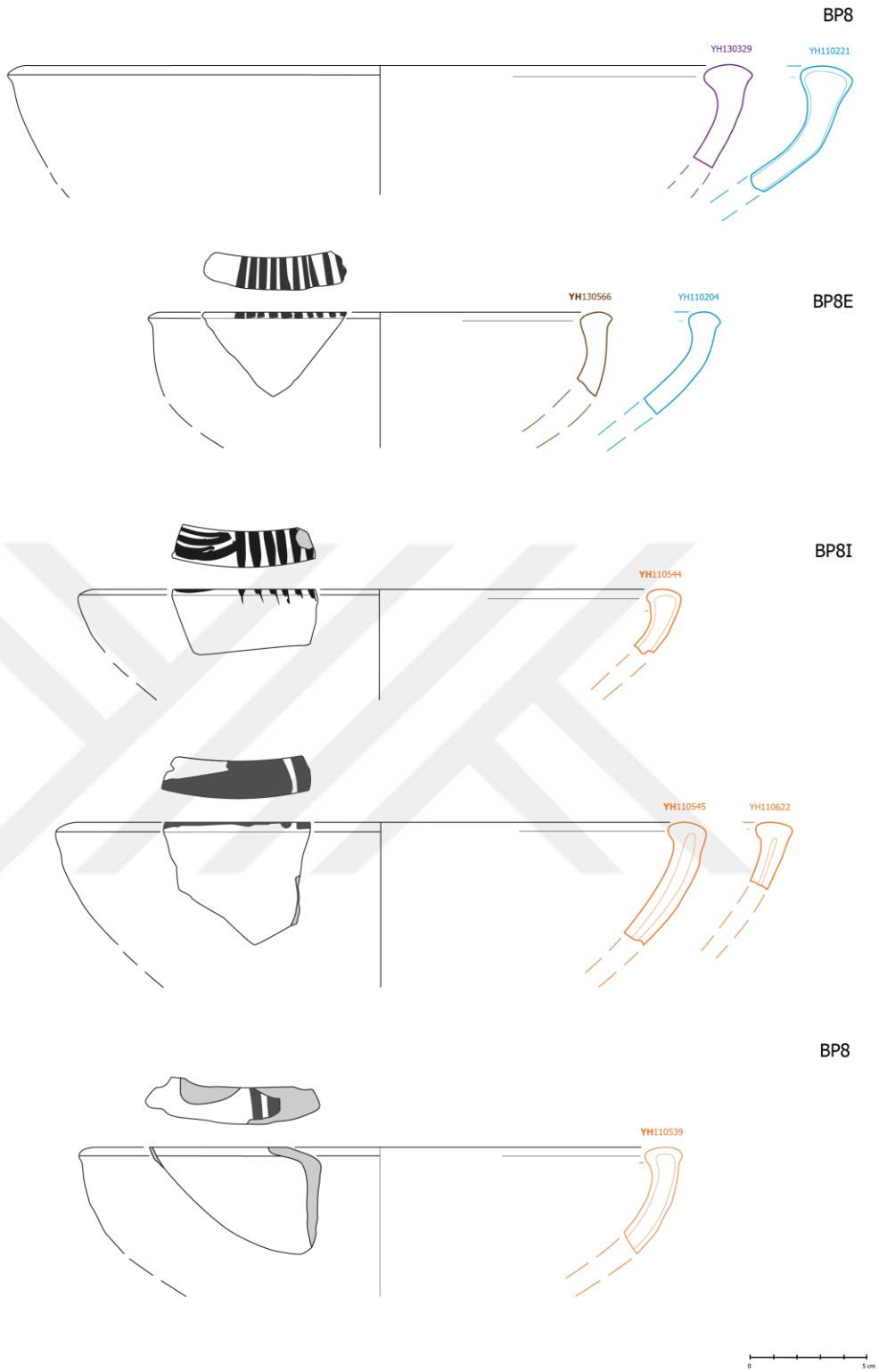


Figure 83. BP8 bowls

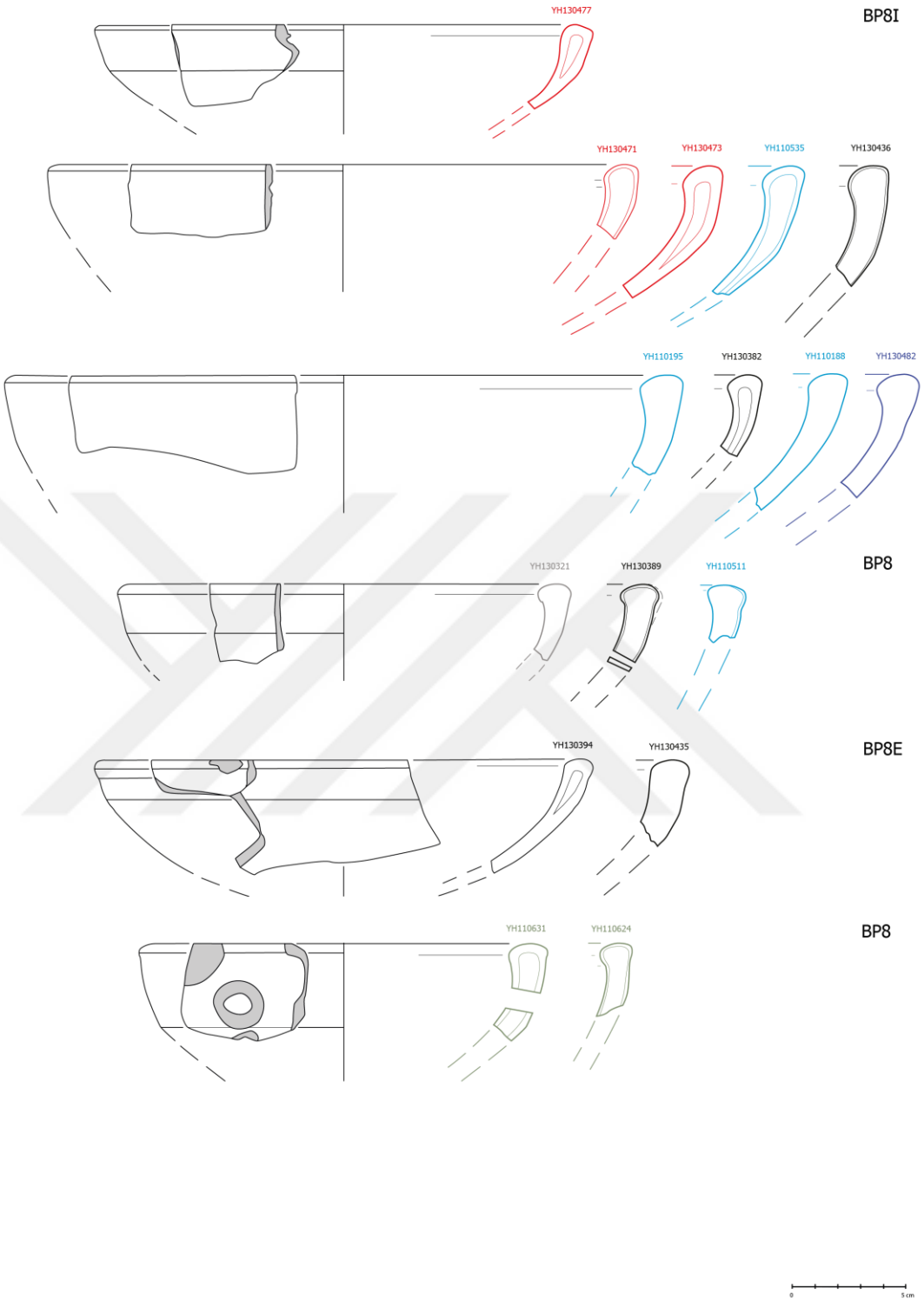


Figure 84. BP8 bowls

| YH-No | Area | Main Grid | Sub-Grid | PL | Deposit | Phase | Form-Main | Form Group | Main Type | Type | Diameter |
|---|---|---|---|---|---|---|---|---|---|---|---|
| 110188 | 1 | E 8/ | d 9 | 34 | P41 | I-9 | Bowl w plain rim | BP8I | T3 | B3 | 28-16% |
| 110195 | 1 | E 8/ | d 9 | 34 | P41 | I-9 | Bowl w plain rim | BP8I | T1 | B1 | 30-11% |
| 110204 | 1 | E 8/ | d9 | 34 | P41 | I-9 | Bowl w plain rim | BP8E | T1 | B1 | 30-5% |
| 110221 | 1 | E 8/ | d 9 | 34 | P41 | I-9 | Bowl w plain rim | BP8 | T1 | B1 | 30-6% |
| 110511 | 1 | E 8/ | d9 | 34 | P41 | I-9 | Bowl w plain rim | BP8 | T1 | B1 | 28-6% |
| 110535 | 1 | E 8/ | d9 | 34 | P41 | I-9 | Bowl w plain rim | BP8I | T1 | B1 | 30-8% |
| 110539 | 1 | E 8/ | f10 | 60 | P34 | I-9 | Bowl w plain rim | BP8 | T1 | B1 | 26-9% |
| 110544 | 1 | E 8/ | f10 | 60 | P34 | I-9 | Bowl w plain rim | BP8I | T3 | B3 | 26-8% |
| 110545 | 1 | E 8/ | f10 | 60 | P34 | I-9 | Bowl w plain rim | BP8I | T1 | B1 | 28-8% |
| 110622 | 1 | E 8/ | f10 | 62 | P34 | I-9 | Bowl w plain rim | BP8I | T1 | B1 | 22-6% |
| 110624 | 1 | E 8/ | f10 | 62 | P34 | I-9 | Bowl w plain rim | BP8 | T1 | B1 | 22-6% |
| 110631 | 1 | E 8/ | f10 | 62 | P34 | I-9 | Bowl w plain rim | BP8 | T1 | B1 | 20-6% |
| 130321 | 1 | E 8/ | d8 | 19 | P74 | I-9/I-10 | Bowl w plain rim | BP8 | T1 | B1 | 20-5% |
| 130329 | 1 | E 8/ | d8 | 28 | P87 | I-9/I-10 | Bowl w plain rim | BP8 | T4 | B4 | 32-7% |
| 130382 | 1 | E 8/ | d8 | 34 | R59 | I-11 | Bowl w plain rim | BP8I | T1 | B1 | 26-10% |
| 130389 | 1 | E 8/ | d8 | 34 | R59 | I-11 | Bowl w plain rim | BP8 | T3 | B3 | 28-6% |
| 130394 | 1 | E 8/ | d8 | 34 | R59 | I-11 | Bowl w plain rim | BP8E | T2 | B2 | 22-19% |
| 130435 | 1 | E 8/ | d8 | 34 | R59 | I-11 | Bowl w plain rim | BP8E | T2 | B2 | 14-5% |
| 130436 | 1 | E 8/ | d8 | 34 | R59 | I-11 | Bowl w plain rim | BP8I | T1 | B1 | 30-13% |
| 130471 | 1 | E 8/ | d8 | 47 | R59 | I-11 | Bowl w plain rim | BP8I | T1 | B1 | 26-8% |
| 130473 | 1 | E 8/ | d8 | 47 | R59 | I-11 | Bowl w plain rim | BP8I | T3 | B3 | 32-7% |
| 130477 | 1 | E 8/ | d8 | 47 | R59 | I-11 | Bowl w plain rim | BP8I | T1 | B1 | 22-7% |
| 130482 | 1 | E 8/ | d8 | 48 | R59 | I-11 | Bowl w plain rim | BP8I | T1 | B1 | 34-8% |
| 130566 | 1 | E 8/ | d8 | 37 | R65 | I-10 | Bowl w plain rim | BP8E | T3 | B3 | 20-10% |

Figure 85. Descriptive Catalogue of BP8 bowls

| YH-No | Fabric | CoreColor-Inclusion(Density+Size) | Surface/Out | Surface/In |
|---|---|---|---|---|
| 110188 | G-L | G-C(F-M, H-F), L(F-M, H-F), G(H-F), M | Burnished | Burnished |
| 110195 | G-C | G-C(H-M, H-F), L(H-F), G(H-F), M | Burnished | Burnished |
| 110204 | O | O-C(F-F), L(H-F) G(H-F), M | Burnished-Slip | Burnished-Slip |
| 110221 | G | G-C(H-M, H-F), L(H-F), G(H-M, H-F), M | Burnished | Smoothed |
| 110511 | G-C | G-C(F-M, H-F), L(H-F), G(H-F), M | Burnished | Smoothed |
| 110535 | G-C | G-C(F-M, H-F), L(H-F), G(F-M, H-F), M | Burnished | Burnished |
| 110539 | G-G | G-C(H-F, F-M), L(H-F), G(F-M, H-F),M | Burnished | Smoothed |
| 110544 | G-G | G-C(F-F), L(H-F), G(H-M, H-F), M | Burnished | Smoothed |
| 110545 | G-G | G-C(M-F), L(F-M, H-F), G(H-M, H-F), M | Burnished | Burnished |
| 110622 | O-G | O-C(F-F), L(H-F), G(F-M, H-F), M | Burnished | Smoothed |
| 110624 | G | G-C(F-F), L(H-F), G(M-F), M | Burnished | Smoothed |
| 110631 | G | G-C(F-F), L(H-F), G(M-F), M | Smoothed | Smoothed |
| 130321 | G-L | G-C(H-F), L(F-M, H-F), G(H-F), M | Burnished | Smoothed |
| 130329 | O | O-C(F-F), L(H-F), G(H-F), M | Burnished | Burnished |
| 130382 | G | G-C(H-F), L(H-F) G(M-F), M | Burnished | Smoothed |
| 130389 | O-L | O-C(H-F), L(F-M, H-F), G(H-F), M | Burnished | Smoothed |
| 130394 | O-L | O-C(H-F), L(F-C, H-M, H-F), G(H-F), M | Burnished | Smoothed |
| 130435 | O-L | O-C(H-F), L(H-F), G(F-C, H-F), M | Smoothed | Smoothed |
| 130436 | G-C | G-C(H-M, H-F), L(H-F), G(F-M, H-F), M | Burnished | Burnished |
| 130471 | G-C | G-C(H-M, H-F), L(H-F), G(F-M, H-F), M | Smoothed | Smoothed |
| 130473 | G-C | G-C(F-C, H-M), L(H-F), G(F-M, H-F), M | Burnished | Smoothed |
| 130477 | G-C | G-C(H-M, H-F), L(F-M, H-F), G(H-F), M | Burnished | Smoothed |
| 130482 | G-C | G-C(H-M, H-F), L(H-F), G(F-M, H-F), M | Burnished | Burnished |
| 130566 | O-G | O-C(F-F), L(F-F), G(H-F, F-M), M | Burnished | Smoothed |

Figure 86. Descriptive Catalogue of BP8 bowls

| YH-No | Color/Out | Color/In | Color/Fabric-Core | Color / Paint | Decoration |
|---|---|---|---|---|---|
| 110188 | 10YR 8/2 | 2.5YR 7/6 | 10YR 7/2 | | |
| 110195 | 5YR 4/3 | 5YR 5/3 | N 5/0 | | |
| 110204 | 7.5R 4/6 | 7.5R 4/6 | 5YR 7/2 | | |
| 110221 | 7.5YR 5/2 | 7.5YR 6/2 | N 4/0 | | |
| 110511 | 7.5YR 6/3 | 7.5YR 6/2 | 10YR 4/1 | | |
| 110535 | 5YR 7/4 | 5YR 7/4 | 10YR 7/3-N 5/0 | | |
| 110539 | 7.5YR 8/3 | 5YR 7/4 | 5YR 6/6-N 6/0 | 5YR 2/1 | LineVert |
| 110544 | 5Y 8/3 | 5Y 8/3 | 5YR 7/4-N 3/0 | 5YR 2/1 | LineVert-BowsConc |
| 110545 | 7.5YR 7/4 | 2.5YR 7/4 | 5YR 7/6 –2.5Y 7/3 | 2.5Y 7/3 | LineVert-RectFill |
| 110622 | 5YR 7/3 | 5YR 7/3 | 5YR 7/3 – N 5/0 | | |
| 110624 | 5YR 7/4 | 5YR 7/4 | 5YR 7/6 – N 4/0 | | |
| 110631 | 7.5YR 6/1 | 7.5YR 6/6 | 7.5YR 6/6 – 7.5Y 4/1 | | |
| 130321 | 2.5YR 7/4 | 2.5YR 7/3 | 10YR 7/4 | | |
| 130329 | 10YR 8/3 | 10YR 8/3 | 2.5YR 7/4 | | gold wash/mica wash |
| 130382 | 10YR 5/2 | 5YR 5/2 | 5YR 7/1-N 5/0 | | |
| 130389 | 10YR 8/4 | 2.5YR 6/6 | 10YR 7/1 | | |
| 130394 | 5YR 8/4 | 5YR 8/4 | 2.5YR 6/8-N 6/0 | | |
| 130435 | 2.5YR 7/4 | 2.5YR 7/4 | 2.5YR 7/3 | | |
| 130436 | 7.5YR 8/3 | 5YR 8/3 | N 5/0 | | |
| 130471 | 5YR 7/4 | 5YR 7/4 | 7.5YR 8/3 – N 4/0 | | |
| 130473 | 2.5Y 8/2 | 5YR 7/3 | 2.5YR 7/4 –5Y 7/1 | | |
| 130477 | 5YR 6/4 | 5YR 7/3 | 5YR 7/3-N 4/0 | | |
| 130482 | 5YR 4/1 | 5YR 6/3 | 5YR 5/1 | | |
| 130566 | 5YR 4/2 | 5YR 4/2 | 2.5YR 6/6 | 5YR 4/1 | LineVert |

Figure 87. Descriptive Catalogue of BP8 bowls[44]

[44] LineVert: Vertical Line(s); RectFill: Rectangular with solid fill; BowsConc: Concentric Bows

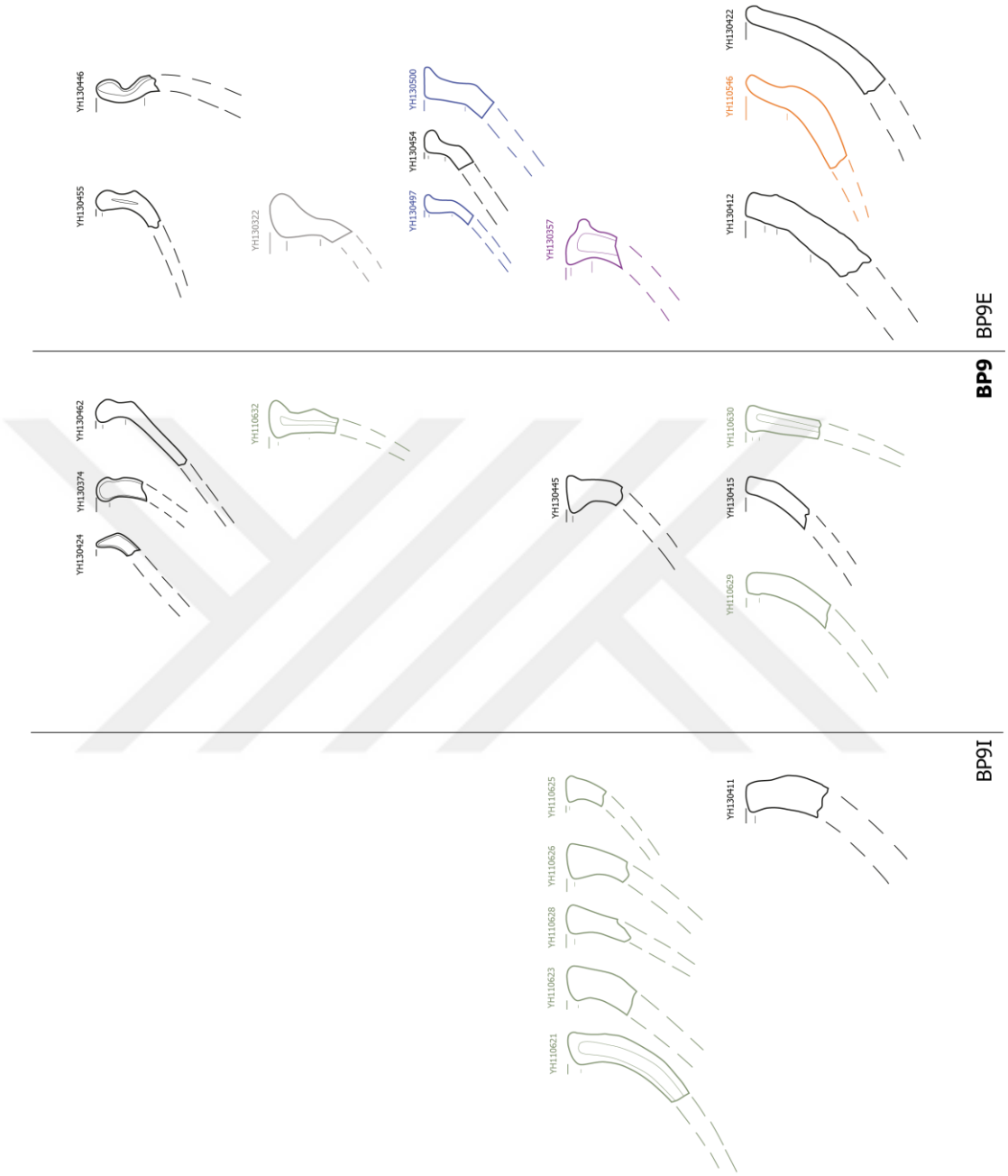


Figure 88. Summary of bowl type BP9

| YH-No | Area | Main Grid | Sub-Grid | PL | Deposit | Phase | Form-Main | Form Group | Main Type | Type | Diameter |
|---|---|---|---|---|---|---|---|---|---|---|---|
| 110546 | 1 | E 8/ | f10 | 60 | P34 | I-9 | Bowl w plain rim | BP9E | T1 | B1 | 14-8% |
| 110621 | 1 | E 8/ | f10 | 62 | P34 | I-9 | Bowl w plain rim | BP9I | T1 | B1 | 26-8% |
| 110623 | 1 | E 8/ | f10 | 62 | P34 | I-9 | Bowl w plain rim | BP9I | T1 | B1 | 18-5% |
| 110625 | 1 | E 8/ | f10 | 62 | P34 | I-9 | Bowl w plain rim | BP9I | T5 | B5 | 20-6% |
| 110626 | 1 | E 8/ | f10 | 62 | P34 | I-9 | Bowl w plain rim | BP9I | T5 | B5 | 22-4% |
| 110628 | 1 | E 8/ | f10 | 62 | P34 | I-9 | Bowl w plain rim | BP9I | T5 | B5 | 20-5% |
| 110629 | 1 | E 8/ | f10 | 62 | P34 | I-9 | Bowl w plain rim | BP9 | T5 | B5 | 16-8% |
| 110630 | 1 | E 8/ | f10 | 62 | P34 | I-9 | Bowl w plain rim | BP9 | T5 | B5 | 22-6% |
| 110632 | 1 | E 8/ | f10 | 62 | P34 | I-9 | Bowl w plain rim | BP9 | T5 | B5 | 26-5% |
| 130322 | 1 | E 8/ | d8 | 19 | P74 | I-9/I-10 | Bowl w plain rim | BP9E | T5 | B5 | 30-5% |
| 130357 | 1 | E 8/ | d8 | 28 | P87 | I-9/I-10 | Bowl w plain rim | BP9E | T2 | B2 | 24-5% |
| 130374 | 1 | E 8/ | d8 | 34 | R59 | I-11 | Bowl w plain rim | BP9 | T5 | B5 | 16-6% |
| 130411 | 1 | E 8/ | d8 | 34 | R59 | I-11 | Bowl w plain rim | BP9I | T5 | B5 | 18-6% |
| 130412 | 1 | E 8/ | d8 | 34 | R59 | I-11 | Bowl w plain rim | BP9E | T1 | B1 | 30-7% |
| 130415 | 1 | E 8/ | d8 | 34 | R59 | I-11 | Bowl w plain rim | BP9 | T5 | B5 | 12-10% |
| 130422 | 1 | E 8/ | d8 | 34 | R59 | I-11 | Bowl w plain rim | BP9E | T4 | B4 | 20-8% |
| 130424 | 1 | E 8/ | d8 | 34 | R59 | I-11 | Bowl w plain rim | BP9 | T5 | B5 | 16-9% |
| 130445 | 1 | E 8/ | d8 | 34 | R59 | I-11 | Bowl w plain rim | BP9 | T5 | B5 | 22-4% |
| 130446 | 1 | E 8/ | d8 | 34 | R59 | I-11 | Bowl w plain rim | BP9E | T5 | B5 | 26-6% |
| 130454 | 1 | E 8/ | d8 | 34 | R59 | I-11 | Bowl w plain rim | BP9E | T5 | B5 | 14-9% |
| 130455 | 1 | E 8/ | d8 | 34 | R59 | I-11 | Bowl w plain rim | BP9E | T5 | B5 | 22-6% |
| 130462 | 1 | E 8/ | d8 | 34 | R59 | I-11 | Bowl w plain rim | BP9 | T5 | B5 | 24-9% |
| 130497 | 1 | E 8/ | d8 | 48 | R59 | I-11 | Bowl w plain rim | BP9E | T5 | B5 | 8-8% |
| 130500 | 1 | E 8/ | d8 | 48 | R59 | I-11 | Bowl w plain rim | BP9E | T5 | B5 | 22-6% |

Figure 89. Descriptive Catalogue of BP9 bowls

| YH-No | Fabric | CoreColor-Inclusion(Density+Size) | Surface/Out | Surface/In |
|---|---|---|---|---|
| 110546 | O-G | O-C(H-F), L(H-F) G(F-C, H-M, H-F), M | Burnished | Smoothed |
| 110621 | O-G | O-C(M-F), L(F-M, H-F), G(F-M, H-F), M | Smoothed | Burnished |
| 110623 | O-G | O-C(F-F), L(F-M, H-F), G(F-M, H-F), M | Smoothed | Smoothed |
| 110625 | G | G-C(F-F), L(H-F), G(M-F), M | Smoothed | Smoothed |
| 110626 | G | G-C(F-F), L(H-F), G(M-F), M | Smoothed | Smoothed |
| 110628 | G-G | G-C(F-F), L(H-F), G(F-M, H-F), M | Smoothed | Smoothed |
| 110629 | G-G | G-C(F-F), L(H-F), G(F-M, H-F), M | Smoothed | Burnished |
| 110630 | G-G | G-C(F-F), L(H-F), G(F-M, H-F), M | Burnished | Burnished |
| 110632 | G | G-C(F-F), L(H-F), G(M-F), M | Smoothed | Smoothed |
| 130322 | B | B-C(H-F), L(H-F), G(H-M, H-F), M | Burnished | Smoothed |
| 130357 | G-G | G-C(H-F), L(H-F), G(F-C, H-M, H-F), M | Smoothed | Smoothed |
| 130374 | G | G-C(H-F), L(H-F), G(M-M, H-F), M | Smoothed | Smoothed |
| 130411 | G-G | G-C(H-F), L(H-F), G(H-M, H-F), M | Polished | Polished |
| 130412 | G-G | G-C(F-C, H-M, H-F), L(H-F), G(H-M, H-F), M | Smoothed | Smoothed |
| 130415 | B | B-C(H-F), L(H-F), G(F-M, H-F), M | Polished | Polished |
| 130422 | O-G | O-C(H-F), L(H-F), G(H-M, H-F), M | Polished | Polished |
| 130424 | G | G-C(H-F), L(H-F), G(H-M, H-F), M | Polished | Polished |
| 130445 | G | G-C(M-F), L(M-F), G(H-F), M | Burnished | Smoothed |
| 130446 | G-G | G-C(H-F), L(H-F), G(H-M, H-F), M | Polished | Polished |
| 130454 | B | B-C(F-F), G(F-F), M | Burnished | Burnished |
| 130455 | G | G-C(F-C, H-F), L(F-M), G(F-M, H-F), M | Smoothed | Smoothed |
| 130462 | G | G-C(F-C, H-F), L(H-F), G(H-F), M | Smoothed-Slip | Smoothed |
| 130497 | G | G-C(F-F), G(F-F), M | Polished | Polished |
| 130500 | G-G | G-C(H-F), L(H-F), G(H-M, H-F), M | Burnished | Smoothed |

Figure 90. Descriptive Catalogue of BP9 bowls

| YH-No | Color/Out | Color/In | Color/Fabric-Core | Decoration |
|---|---|---|---|---|
| 110546 | 2.5YR 7/3 | 5YR 8/2-2.5YR 3/1 | 5YR 5/4 | |
| 110621 | 5YR 4/1-6/1 | 5YR 5/3-4/1 | 2.5YR 5/4 | |
| 110623 | 5YR 8/3 | 5YR 8/3 | 5YR 7/3 | |
| 110625 | 5Y 7/1 | 5Y 7/1 | 5Y 5/1 | |
| 110626 | 5Y 7/1 | 5Y 7/1 | 5Y 5/1 | |
| 110628 | 5Y 7/1 | 5Y 7/1 | 5Y 7/2 | |
| 110629 | 5Y 7/1 | 5Y 7/2 | N 4/0 | |
| 110630 | 10Y 5/1 | 10YR 5/1 | 2.5Y 6/2 – N 5/0 | |
| 110632 | 10YR 7/4 | 10YR 7/4 | 10YR 7/4 – N 5/0 | |
| 130322 | N 4/0 | N 4/0 | N 4/0 | Mica Wash |
| 130357 | 5YR 8/4-10YR 6/6 | 5YR 8/4 | 5YR 7/3-N 7/0 | |
| 130374 | 10YR 5/1 | 10YR 6/2 | 10YR 7/2-N 5/0 | |
| 130411 | 5Y 6/1-8/2 | 5Y 8/3 | N 6/0 | |
| 130412 | 7.5YR 7/3 | 7.5YR 7/2 | 7.5YR 6/1-N 4/0 | |
| 130415 | 10YR 5/1 | 10YR 4/1 | N 4/1 | Black Polished |
| 130422 | 5YR 8/3 | 5YR 8/3 | 10YR 8/3 | |
| 130424 | 5YR 5/1 | 5YR 5/1 | 5YR 5/1-6/3 | Black Polished |
| 130445 | 10YR 7/2 | 10YR 8/2 | 10YR 7/3 | |
| 130446 | 10YR 4/1 | 10YR 4/1 | N 6/0 | Black Polished |
| 130454 | 10YR 3/1 | 10YR 3/1 | 10YR 3/1 | Black Polished |
| 130455 | 2.5Y 7/2 | 5Y 8/2 | 2.5Y 7/2-N 5/0 | |
| 130462 | 7.5Y 8/1-2.5Y 8/3 | 2.5Y 5/1 | 5Y 8/2 | |
| 130497 | N 4/0 | N 4/0 | 5Y 7/2 | Black Polished |
| 130500 | N 8/0-N 6/0 | N 7/0-N 6/0 | 7.5Y 7/1 | Mica Wash |

Figure 91. Descriptive Catalogue of BP9 bowls

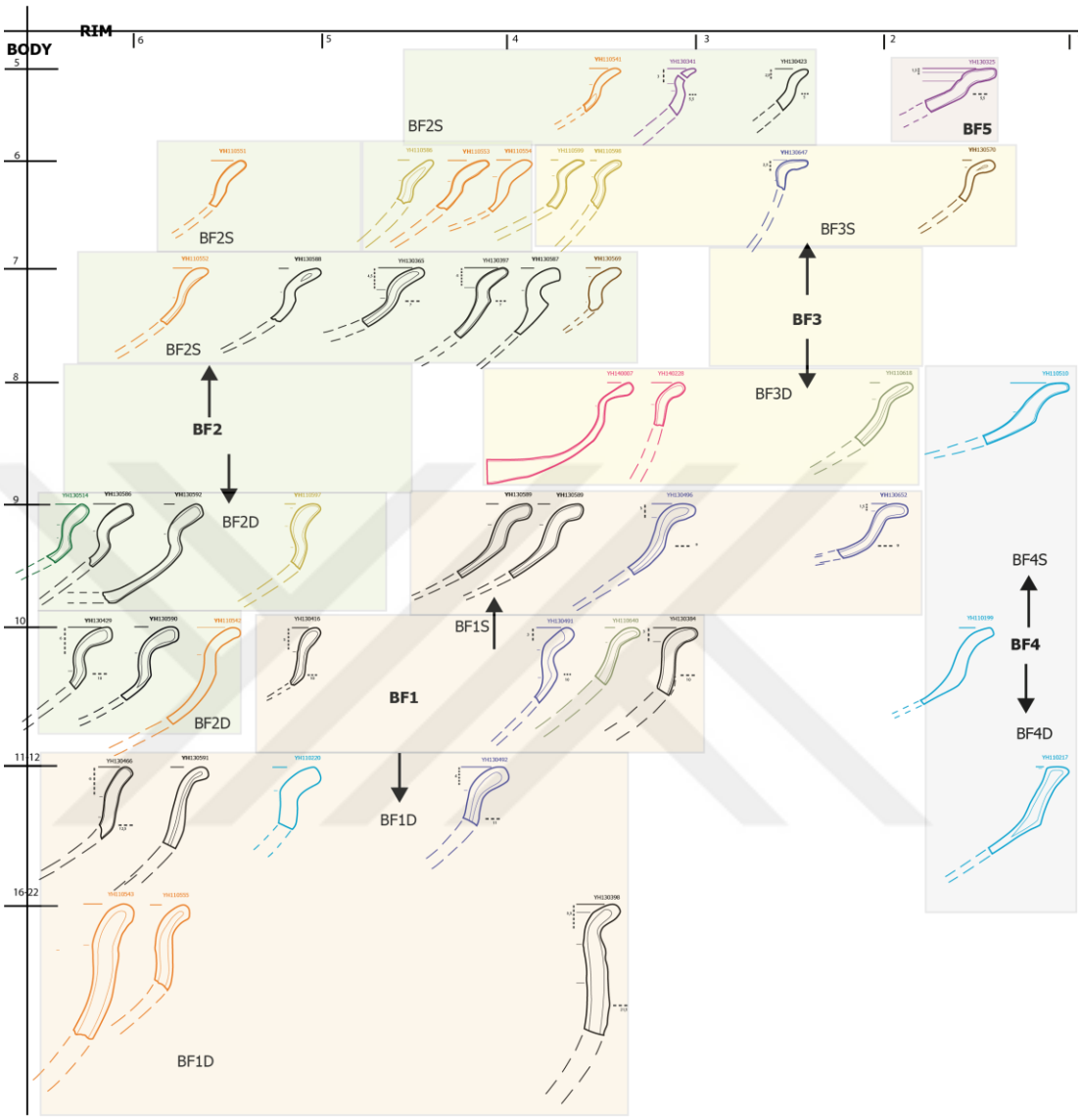


ex: BF1D = BF (bowl with flaring rim) with 1 (first group) and D (capacity: deep)
BF1S = BF (bowl with flaring rim) with 1 (first group) and S (capacity: shallow)

Figure 92. Summary of bowl type with flaring rim (BF1-BF5)

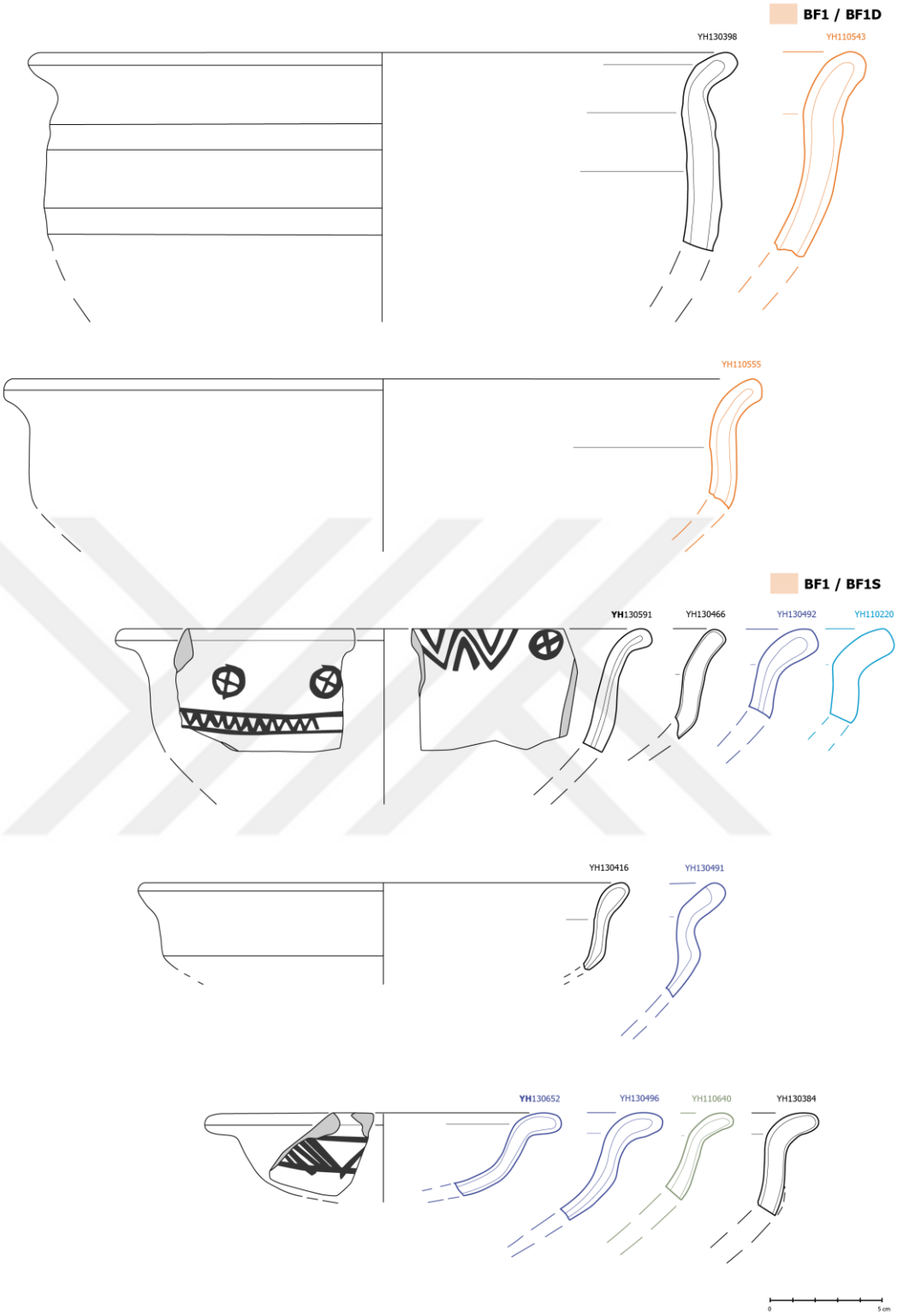


Figure 93. BF1 bowls

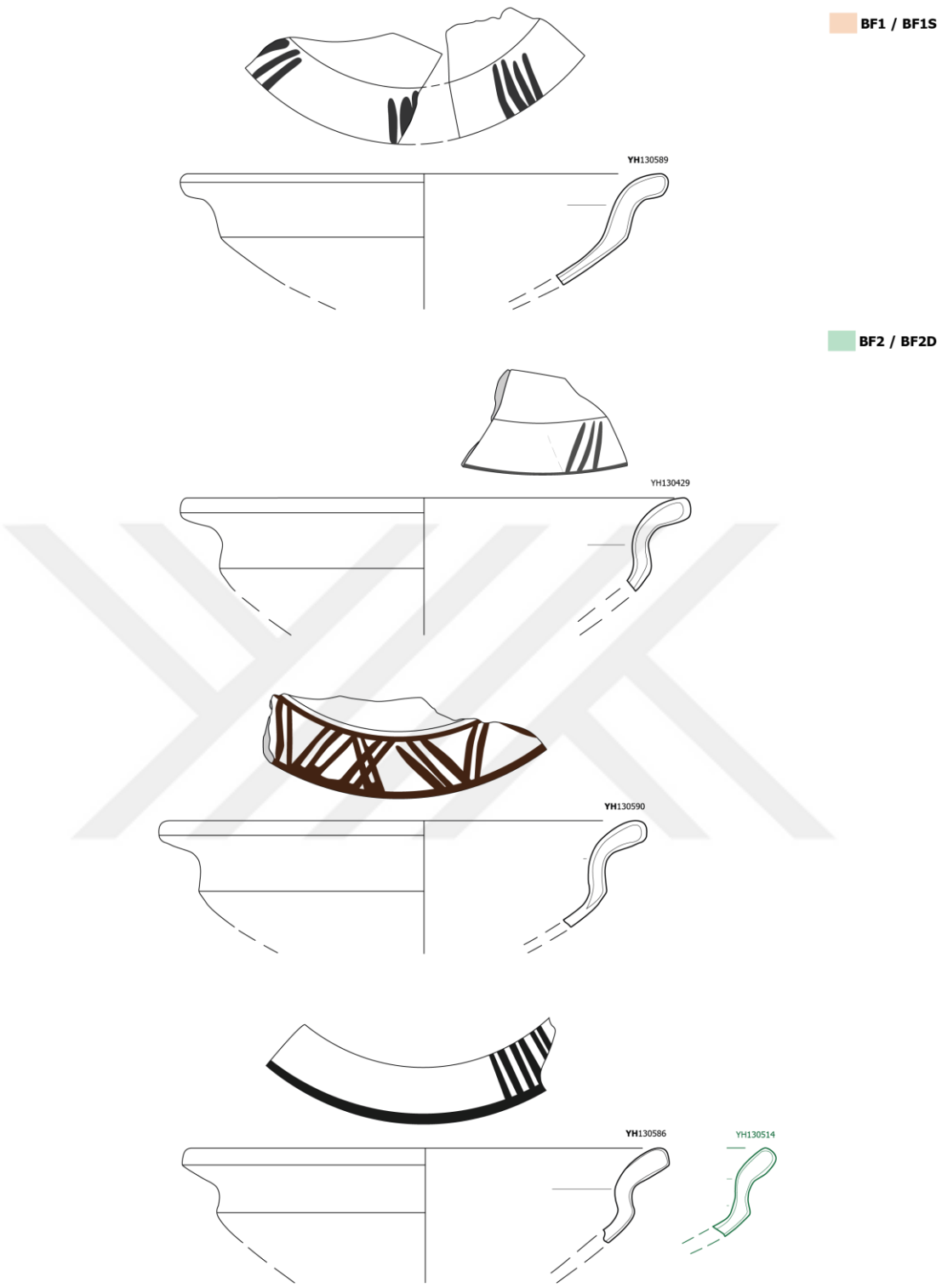


Figure 94. BF1 and BF2 bowls

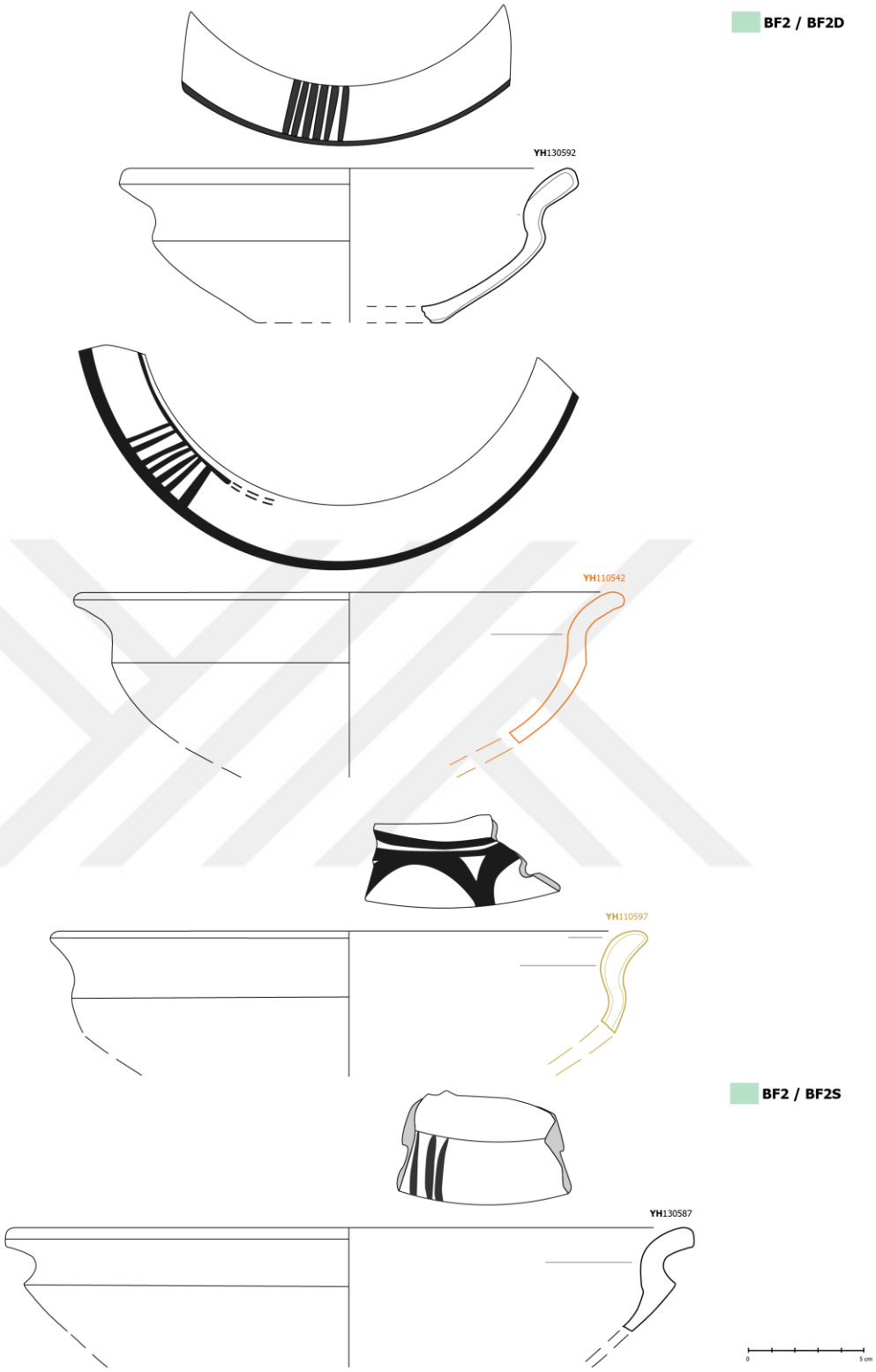


Figure 95. BF2 bowls

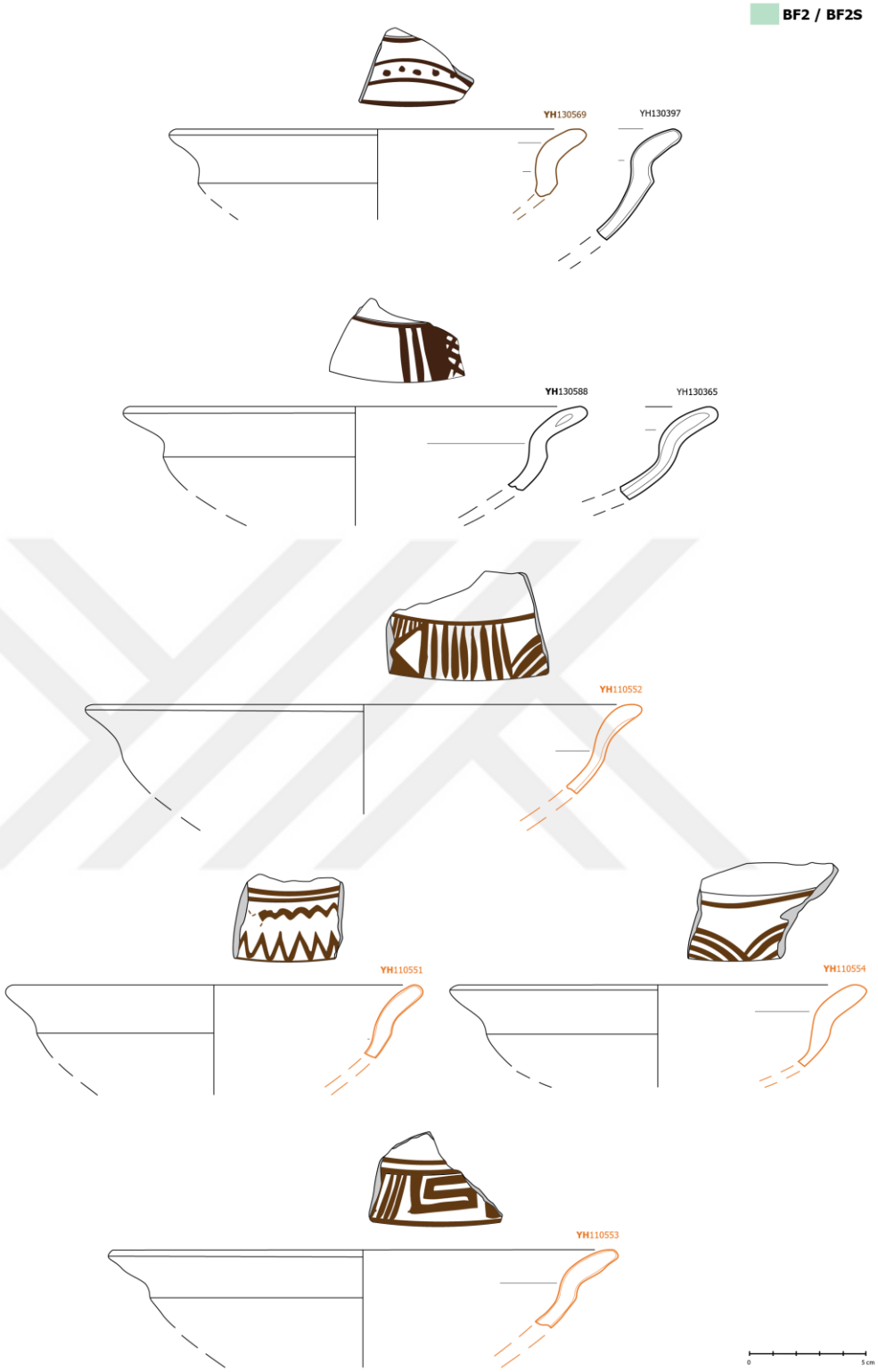


Figure 96. BF2 bowls

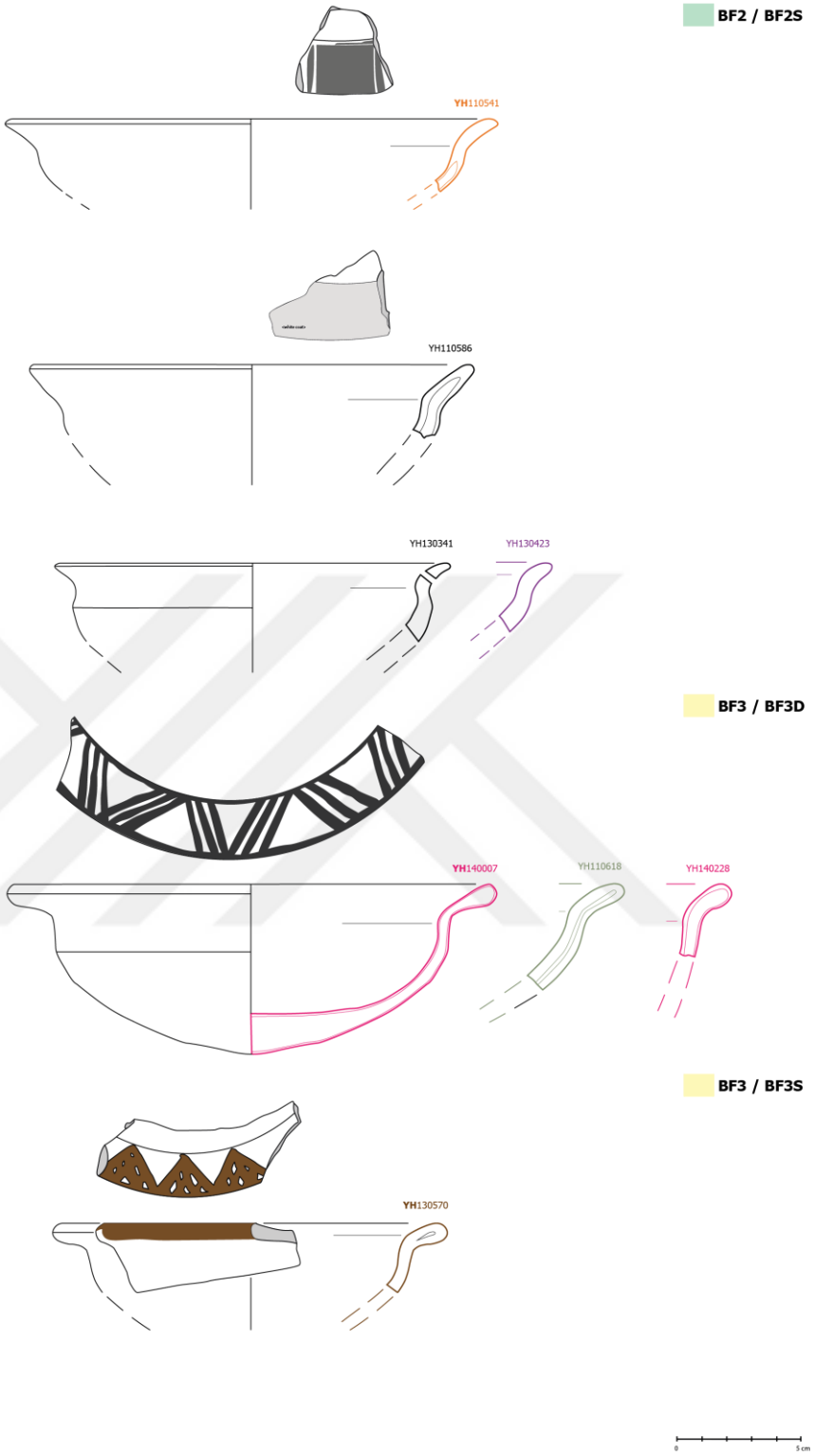


Figure 97. BF2 and BF3 bowls

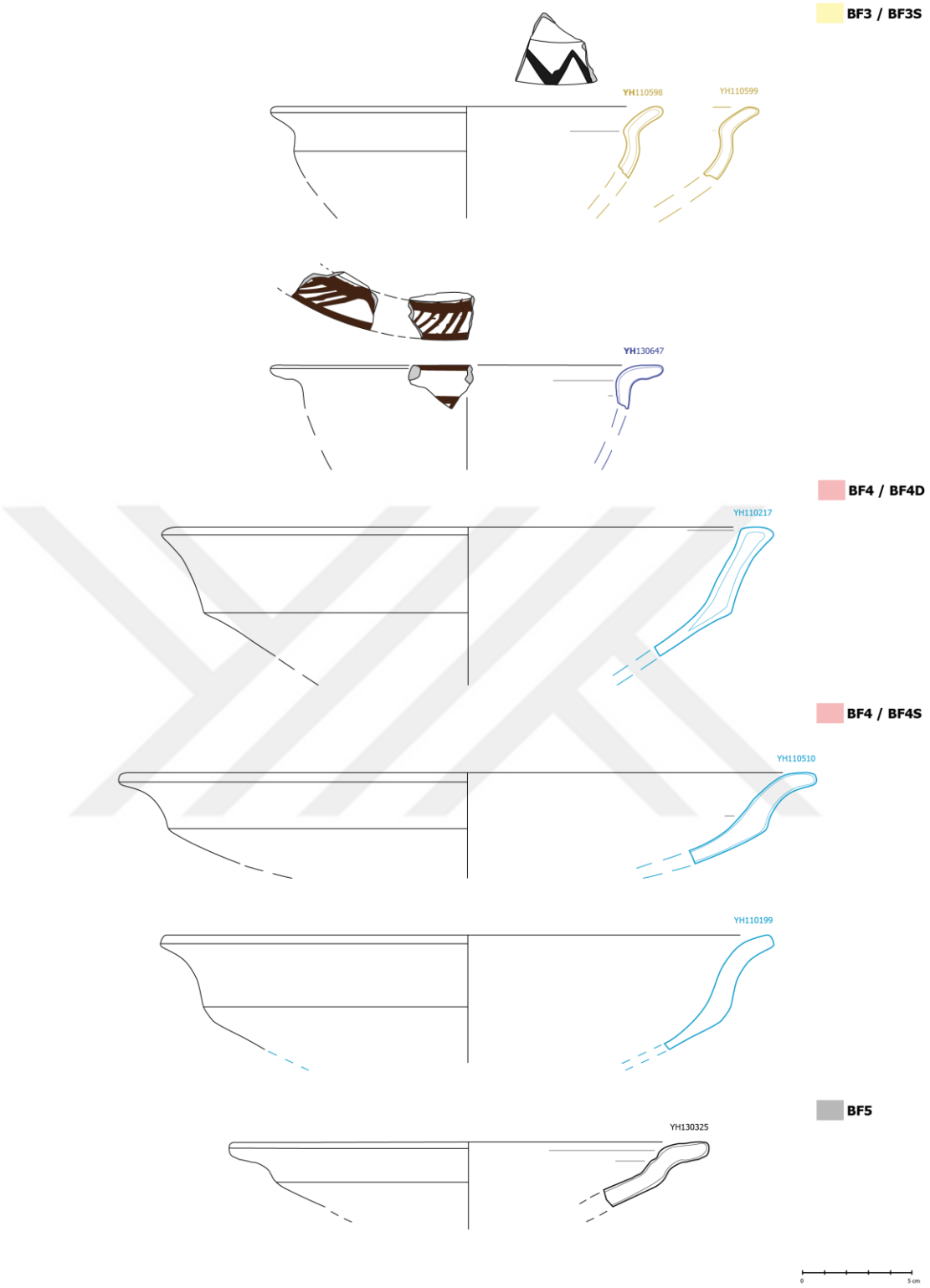


Figure 98. BF3, BF4 and BF5 bowls

| YH-No | Area | Main Grid | Sub-Grid | PL | Deposit | Phase | Form-Main | Form Group | Main Type | Type | Diameter |
|---|---|---|---|---|---|---|---|---|---|---|---|
| 110199 | 1 | E 8/ | d9 | 34 | P41 | I-9 | Bowl with flaring rim | BF4D | T5 | F5 | 28-16% |
| 110217 | 1 | E 8/ | d9 | 34 | P41 | I-9 | Bowl with flaring rim | BF4D | T1 | F1 | 28-11% |
| 110220 | 1 | E 8/ | d 9 | 34 | P41 | I-9 | Bowl w flaring rim | BF1D | T1 | F1 | 34-5% |
| 110510 | 1 | E 8/ | d9 | 34 | P41 | I-9 | Bowl with flaring rim | BF4S | T5 | F5 | 32-5% |
| 110541 | 1 | E 8/ | f10 | 60 | P34 | I-9 | Bowl with flaring rim | BF2S | T1 | F1 | 20-6% |
| 110542 | 1 | E 8/ | f10 | 60 | P34 | I-9 | Bowl with flaring rim | BF2D | T1 | F1 | 24-25% |
| 110543 | 1 | E 8/ | f10 | 60 | P34 | I-9 | Bowl w flaring rim | BF1D | T1 | F1 | 42-10% |
| 110551 | 1 | E 8/ | f10 | 60 | P34 | I-9 | Bowl with flaring rim | BF2S | T4 | F4 | 18-8% |
| 110552 | 1 | E 8/ | f10 | 60 | P34 | I-9 | Bowl with flaring rim | BF2S | T4 | F4 | 24-9% |
| 110553 | 1 | E 8/ | f10 | 60 | P34 | I-9 | Bowl with flaring rim | BF2S | T4 | F4 | 22-8% |
| 110554 | 1 | E 8/ | f10 | 60 | P34 | I-9 | Bowl with flaring rim | BF2S | T4 | F4 | 18-8% |
| 110555 | 1 | E 8/ | f10 | 60 | P34 | I-9 | Bowl w flaring rim | BF1D | T1 | F1 | 34-7% |
| 110586 | 1 | E 8/ | f10 | 61 | P34 | I-9 | Bowl with flaring rim | BF2S | T1 | F1 | 18-8% |
| 110597 | 1 | E 8/ | f10 | 61 | P34 | I-9 | Bowl with flaring rim | BF2D | T1 | F1 | 26-11% |
| 110598 | 1 | E 8/ | f10 | 61 | P34 | I-9 | Bowl with flaring rim | BF3S | T1 | F1 | 18-7% |
| 110599 | 1 | E 8/ | f10 | 61 | P34 | I-9 | Bowl with flaring rim | BF3S | T1 | F1 | 16-8% |
| 110618 | 1 | E 8/ | f10 | 62 | P34 | I-9 | Bowl with flaring rim | BF3D | T2 | F2 | 24-9% |
| 110640 | 1 | E 8/ | f10 | 62 | P34 | I-9 | Bowl w flaring rim | BF1S | T3 | F3 | 20-13% |
| 130325 | 1 | E 8/ | d8 | 28 | P87 | I-9/I-10 | Bowl with flaring rim | BF5 | T1 | F1 | 22-10% |
| 130341 | 1 | E 8/ | d8 | 28 | P87 | I-9/I-10 | Bowl with flaring rim | BF2S | T1 | F1 | 16-9% |
| 130365 | 1 | E 8/ | d8 | 34 | R59 | I-11 | Bowl with flaring rim | BF2S | T1 | F1 | 24-6% |
| 130384 | 1 | E 8/ | d8 | 34 | R59 | I-11 | Bowl w flaring rim | BF1S | T1 | F1 | 32-10% |
| 130397 | 1 | E 8/ | d8 | 34 | R59 | I-11 | Bowl with flaring rim | BF2S | T5 | F5 | 16-15% |
| 130398 | 1 | E 8/ | d8 | 34 | R59 | I-11 | Bowl w flaring rim | BF1D | T1 | F1 | 32-14% |
| 130416 | 1 | E 8/ | d8 | 34 | R59 | I-11 | Bowl w flaring rim | BF1S | T1 | F1 | 22-9% |
| 130423 | 1 | E 8/ | d8 | 34 | R59 | I-11 | Bowl with flaring rim | BF2S | T1 | F1 | 8-5% |
| 130429 | 1 | E 8/ | d8 | 34 | R59 | I-11 | Bowl with flaring rim | BF2D | T3 | F3 | 22-11% |
| 130466 | 1 | E 8/ | d8 | 34 | R59 | I-11 | Bowl w flaring rim | BF1D | T1 | F1 | 26-8% |
| 130491 | 1 | E 8/ | d8 | 48 | R59 | I-11 | Bowl w flaring rim | BF1S | T3 | F3 | 22-14% |
| 130492 | 1 | E 8/ | d8 | 48 | R59 | I-11 | Bowl w flaring rim | BF1D | T1 | F1 | 32-10% |
| 130496 | 1 | E 8/ | d8 | 48 | R59 | I-11 | Bowl w flaring rim | BF1S | T1 | F1 | 22-10% |
| 130514 | 1 | E 8/ | d8 | 49 | R59 | I-11 | Bowl with flaring rim | BF2D | T1 | F1 | 26-7% |
| 130569 | 1 | E 8/ | d8 | 37 | R65 | I-10 | Bowl with flaring rim | BF2S | T1 | F1 | 18-7% |
| 130570 | 1 | E 8/ | d8 | 37 | R65 | I-10 | Bowl with flaring rim | BF3S | T4 | F4 | 16-21% |
| 130586 | 1 | E 8/ | d8 | 34 | R59 | I-11 | Bowl with flaring rim | BF2D | T1-T3 | F1-F3 | 22-18% |
| 130587 | 1 | E 8/ | d8 | 34 | R59 | I-11 | Bowl with flaring rim | BF2S | T2 | F2 | 20-13% |
| 130588 | 1 | E 8/ | d8 | 34 | R59 | I-11 | Bowl with flaring rim | BF2S | T4 | F4 | 20-10% |
| 130589 | 1 | E 8/ | d8 | 34 | R59 | I-11 | Bowl w flaring rim | BF1S | T3 | F3 | 22-12% |
| 130590 | 1 | E 8/ | d8 | 34 | R59 | I-11 | Bowl with flaring rim | BF2D | T3 | F3 | 22-20% |
| 130591 | 1 | E 8/ | d8 | 34 | R59 | I-11 | Bowl w flaring rim | BF1D | T1 | F1 | 24-10% |
| 130592 | 1 | E 8/ | d8 | 34 | R59 | I-11 | Bowl with flaring rim | BF2D | T3 | F3 | 22-25% |
| 130647 | 1 | E 8/ | d8 | 48 | R59 | I-11 | Bowl with flaring rim | BF3S | T3 | F3 | 18-5% |
| 130652 | 1 | E 8/ | d8 | 48 | R59 | I-11 | Bowl w flaring rim | BF1S | T1 | F1 | 16-3% |
| 140007 | 1 | E 8/ | d 8 | 63 | P78 | I-9/I-10 | Bowl with flaring rim | BF3D | T1 | F1 | 20-28% |
| 140228 | 1 | E 8/ | d8 | 63 | P78 | I-9/I-10 | Bowl with flaring rim | BF3D | T1 | F1 | 24-6% |

Figure 99. Descriptive Catalogue of BF bowls

| YH-No | Fabric | CoreColor-Inclusion(Density+Size) | Surface/Out | Surface/In |
|---|---|---|---|---|
| 110199 | B | B-C(H-F), L(H-F), G(F-M, H-F), M | Polished | Polished |
| 110217 | G-C | G-C(F-M, H-F), L(F-F), G(F-M, H-F), M | Burnished | Burnished |
| 110220 | G-C | G-C(F-M, H-F), L(F-F), G(F-M, H-F), M | Smoothed | Smoothed |
| 110510 | B | B-C(H-F), L(M-F), G(F-M, H-F), M | Polished | Polished |
| 110541 | G-G | G-C(H-F), L(H-F), G(F-M, H-F), M | Burnished | Burnished |
| 110542 | G-G | G-G (M-F), L(F-M, H-F), G(F-C, M-M, H-F), M | Burnished | Burnished |
| 110543 | G-G | G-G (M-M, H-F), L(F-M, H-F), G(H-M, H-F), M | Burnished | Burnished |
| 110551 | O-G | O-C(F-F), L(F-F), G(H-M, H-F), M | Burnished | Burnished |
| 110552 | O-G | O-C(F-F), L(F-F), G(H-M, H-F), M | Burnished | Burnished |
| 110553 | O-G | O-C(F-F), L(F-F), G(H-F), M | Burnished | Burnished |
| 110554 | O-G | O-C(F-F), L(F-F), G(H-F), M | Burnished | Burnished |
| 110555 | G-G | G-C(H-F), L(F-M, H-F), G(H-M, H-F), M | Burnished | Burnished |
| 110586 | G-G | G-C(H-F), L(H-F), G(H-M, H-F), M | Burnished | Burnished |
| 110597 | G-C | G-C(F-M, H-F), L(F-M, H-F) G(F-M, H-F), M | Burnished | Burnished |
| 110598 | G-G | G-C(H-F), L(H-F), G(H-F), M | Smoothed | Burnished |
| 110599 | G-G | G-C(H-F), L(H-F), G(H-F), M | Smoothed | Burnished |
| 110618 | G-L | G-C(H-F), L(F-C, H-M, H-F), G(H-F), M | Smoothed | Smoothed |
| 110640 | G | G-C(M-F), L(F-M, H-F), G(F-M, H-F), M | Burnished-Slip | Burnished-Slip |
| 130325 | G-C | G-C(H-F, F-C), L(H-F), G(F-M, H-F), M | Burnished-Slip | Burnished-Slip |
| 130341 | O | O-C(F-C, M-F), L(F-F), G(H-F), M | Burnished | Burnished |
| 130365 | G | G-C(H-F), L(H-F), G(F-M, H-F), M | Burnished | Burnished |
| 130384 | G-L | G-C(H-F), L(F-C, H-M, H-F), G(F-M, H-F), M | Burnished-Slip | Burnished-Slip |
| 130397 | B | B-C(M-F), L(F-F), G(F-M, H-F), M | Polished | Polished |
| 130398 | G-C | G-C(M-C, H-M), L(F-C, H-M, H-F), G(H-M, H-F), M | Burnished | Smoothed |
| 130416 | G | G-C(H-F), L(H-F), G(H-F), M | Burnished | Burnished |
| 130423 | O-G | O-C(F-F), L(F-F), G(F-F), M | Burnished | Burnished |
| 130429 | G-L | G-C(H-F), L(H-M, H-F), G(F-M, H-F), M | Smoothed | Smoothed |
| 130466 | G-C | G-C(F-C, H-M, H-F), L(F-M, H-F), G(F-M, H-F), M | Burnished | Burnished |
| 130491 | G-L | G-C(H-M, H-F), L(H-M, H-F), G(H-F), M | Smoothed | Burnished |
| 130492 | G-C | G-C(H-M, H-F), L(F-C, H-F), G(F-M, H-F), M | Burnished | Burnished |
| 130496 | G-C | G-C(H-F), L(F-M, H-F), G(F-M, H-F), M | Burnished | Burnished |
| 130514 | G-C | G-C(F-M, H-F), L(H-F), G(H-F), M | Burnished-Slip | Burnished-Slip |
| 130569 | G | G-C(MF-F), L(M-F), G(M-F), M | Smoothed | Burnished |
| 130570 | O | O-C(F-F), L(H-F), G(F-F), M | Smoothed | Burnished |
| 130586 | G-L | G-C(H-F), L(F-C, H-F, F-M), G(H-F), M | Burnished | Burnished |
| 130587 | O-L | O-C(H-F), L(F-C, H-F, H-M), G(H-F), M | Smoothed | Burnished |
| 130588 | O-L | O-C(F-F), L(H-F), G(M-F), M | Smoothed | Burnished |
| 130589 | G-L | G-C(F-C, H-F), L(H-F, H-M), G(F-C, H-F), M | Burnished | Burnished |
| 130590 | G-L | G-C(H-F), L(F-C, H-F, H-M), G(H-F), M | Smoothed | Burnished |
| 130591 | G-C | G-C(F-C, H-F), L(H-M, H-F), G(F-M, H-F), M | Burnished | Burnished |
| 130592 | G-L | G-C(H-F), L(F-C, H-F, H-M), G(H-F), M | Burnished | Burnished |
| 130647 | G-L | G-C(F-M, H-F), L(F-M, H-F), G(F-M, H-F), M | Smoothed | Burnished |
| 130652 | G | G-C(H-F), L(F-M, H-F), G(H-F), M | Burnished | Burnished |
| 140007 | G-L | G-C(F-F), L(F-M, H-F), G(H-F), M | Burnished | Smoothed |
| 140228 | G-C | G-C(H-M, H-F), L(H-F), G(H-M, H-F), M | Burnished | Burnished |

Figure 100. Descriptive Catalogue of BF bowls

| YH-No | Color/Out | Color/In | Color/Fabric-Core | Color / Paint | Decoration |
|---|---|---|---|---|---|
| 110199 | 5Y 5/1 | 5Y 5/1 | 7.5Y 3/1 | | |
| 110217 | 5YR 6/4 | 5YR 7/4 | 5YR 7/4-N 6/0 | | |
| 110220 | 5YR 6/3 | N 4/0 | 2.5YR 7/4 | | |
| 110510 | 7.5Y 4/1 | 7.5Y 4/1 | 2.5Y 7/3-N 4/0 | | |
| 110541 | 2.5YR 6/6 | 2.5YR 6/6 | 2.5YR 6/6-7.5YR 7/2 | 5Y 7/2 | LineVert-Fill |
| 110542 | 5YR 8/4 | 2.5YR 6/4 | 5YR 6/6 – 5Y 5/1 | 5YR 2/1 | LineVert-LineHorz |
| 110543 | 2.5YR 7/4 | 5YR 7/4 | 5YR 6/6-10YR 5/1 | | |
| 110551 | 5Y 8/3 | 5Y 8/3 | 10YR 7/3 | 7.5YR 3/3 | Zigzags-WavyLine-LineHorz |
| 110552 | 7.5YR 6/1 | 5Y 7/1 | 10YR 7/2 | 5YR 3/3 | LineVert-BowsConc-TriangFillLine |
| 110553 | 5Y 8/3 | 5Y 8/3 | 2.5YR 7/3 | 5YR 3/3 | Meander-LineVert-LineHorz |
| 110554 | 2.5Y 8/3 | 2.5Y 8/3 | 2.5YR 6/6 | 5YR 3/3 | BowsConc-LineHorz |
| 110555 | 7.5YR 7/6 | 7.5YR 8/6 | 7.5YR 7/6-10YR 4/1 | | |
| 110586 | 2.5YR 7/6 | 5YR 7/6 | 7.5YR 7/6-7.5Y 5/1 | 10YR 8/3( | White Coat on rim |
| 110597 | 5YR 6/6 | 5YR 6/6 | 5YR 7/6-5Y 5/1 | 5YR 3/2 | Bows-LineHorz |
| 110598 | 5YR 7/4 | 5YR 7/4 | 7.5YR 7/6-10YR 4/1 | 5YR 3/1 | Zigzags |
| 110599 | 5YR 5/2 | 5YR 5/2 | 5YR 5/4-5YR 4/1 | | |
| 110618 | 5Y 8/3 | 7.5YR 8/4 | 2.5YR 5/6 –2.5Y 7/3 | | |
| 110640 | 5Y 8/2 | 5Y 8/2 | 7.5YR 7/4-2.5Y 7/2 | | |
| 130325 | 7.5YR 4/4 | 7.5YR 4/4 | N 3/0 | | |
| 130341 | 2.5YR 6/4 | 2.5YR 6/4 | 2.5YR 7/3-6/4 | | |
| 130365 | 5YR 7/4 | 5YR 6/2 | 5YR 7/1-N 4/0 | | |
| 130384 | 10R 6/4 | 10R 5/4 | 10R 6/6-10YR 6/2 | | |
| 130397 | N 2/0 | N 2/0 | N 4/0 | | Black Polished |
| 130398 | 5YR 6/4 | 5YR 6/4 | 5YR 6/4-N 6/0 | | Mica Wash |
| 130416 | 5YR 7/3 | 5YR 7/3 | 5YR 6/6-N 5/0 | | |
| 130423 | 2.5YR 6/6 | 2.5Y 8/3 | 5YR 6/6 | | |
| 130429 | 2.5Y 8/2-5YR 8/3 | 2.5Y 8/2 | 5YR 8/3 – N 5/0 | 2.5Y 3/1 | LineDiag |
| 130466 | 7.5YR 6/1 | 7.5YR 6/1 | 7.5YR 7/4 – N 5/0 | | |
| 130491 | 7.5Y 8/2 | 5YR 8/3 | 2.5YR 7/4-N 6/0 | | |
| 130492 | 5YR 7/4 | 5YR 7/4 | 5YR 7/4-N 6/0 | | |
| 130496 | 10R 6/6 | 5YR 6/3 | 10YR 7/3-5/1 | | |
| 130514 | 10R 5/6 | 10R 5/6 | 2.5Y 8/4-N 6/0 | | |
| 130569 | 7.5YR 7/4 | 7.5YR 7/4 | 10YR 7/3-7.5Y 6/1 | 5YR 4/1 | BowsConc-DotFill-LineHorz |
| 130570 | 2.5YR 8/3 | 2.5YR 8/3 | 2.5YR 6/6 | 5YR 4/1 | TriangFillNet |
| 130586 | 2.5YR 7/6 | 2.5YR 7/6-N 5/0 | 5YR 7/6-N 5/0 | 5YR 3/1 | LineVert-LineHorz |
| 130587 | 5YR 8/4 | 2.5YR 7/6 | 5YR 7/6-2.5YR 7/6 | 2.5YR 5/1 | LineVert |
| 130588 | 2.5Y 8/2 | 5YR 7/4 | 5YR 7/4 | 5YR 3/1 | LineVert-NetPattern |
| 130589 | 7.5YR 8/3 | 5YR 8/4 | 2.5YR 7/6-2.5YR 6/1 | 5YR 5/1 | LineDiag |
| 130590 | 10YR 8/3 | 7.5YR 8/3 | 5YR 8/4-N 6/0 | 7.5YR 6/1 | Zigzags-LineHorz |
| 130591 | 5YR 6/6 | 5YR 6/6 | 7.5YR 8/4-N 5/0 | 5YR 6/1 | Zigzags-CircWCross-WavyLine |
| 130592 | 5YR 8/4 | 5YR 8/4-N 6/0 | 2.5YR 7/4-N 6/0 | 5YR 5/1 | LineVert-LineHorz |
| 130647 | 5YR 8/3 | 10YR 8/3 | 5YR 8/4 - N 5/0 | 5YR 2/1 | LineDiag-LineHorz |
| 130652 | 5YR 7/4 | 5YR 7/4 | 5YR 7/6-N 4/0 | 5YR 2/1 | LineDiag-LineHorz |
| 140007 | 2.5YR 6/8 | 2.5YR 6/8 | N 5/0 | 5YR 3/1 | Zigzags-LineHorz |
| 140228 | 7.5YR 6/4 | 7.5YR 6/4 | 10YR 7/4-10Y 5/1 | | |

Figure 101. Descriptive Catalogue of BF bowls[45]

[45] BowsConc: Concentric Bows; CircWCross: Circles with cross; DotFill: Fill with dots; TriangFillNet; Triangle(s) with net pattern; WavyLine: Continuous Wavy Line;

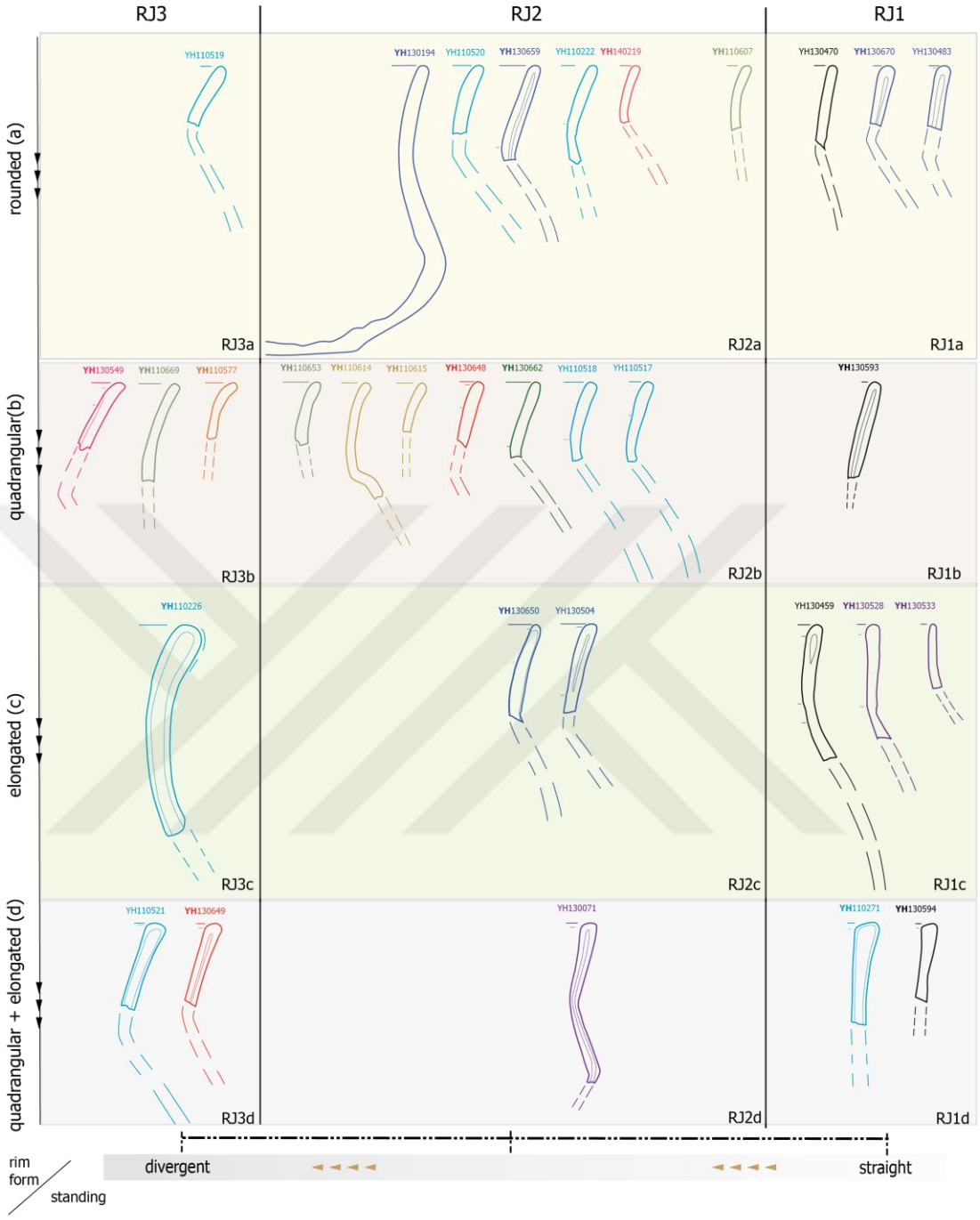


Figure 102. Summary of round-mouthed jug type RJ

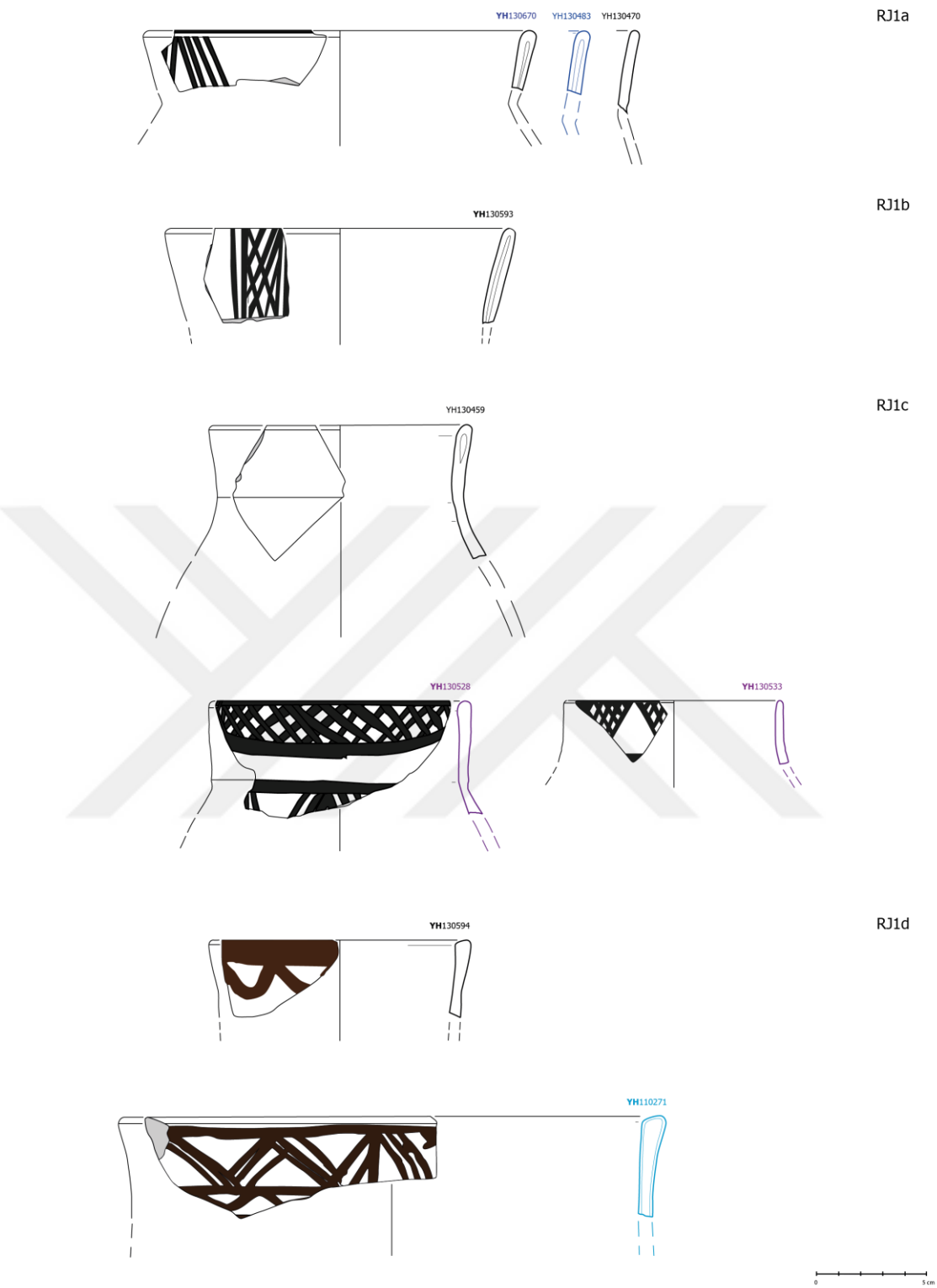


Figure 103. RJ1round-mouthed jugs

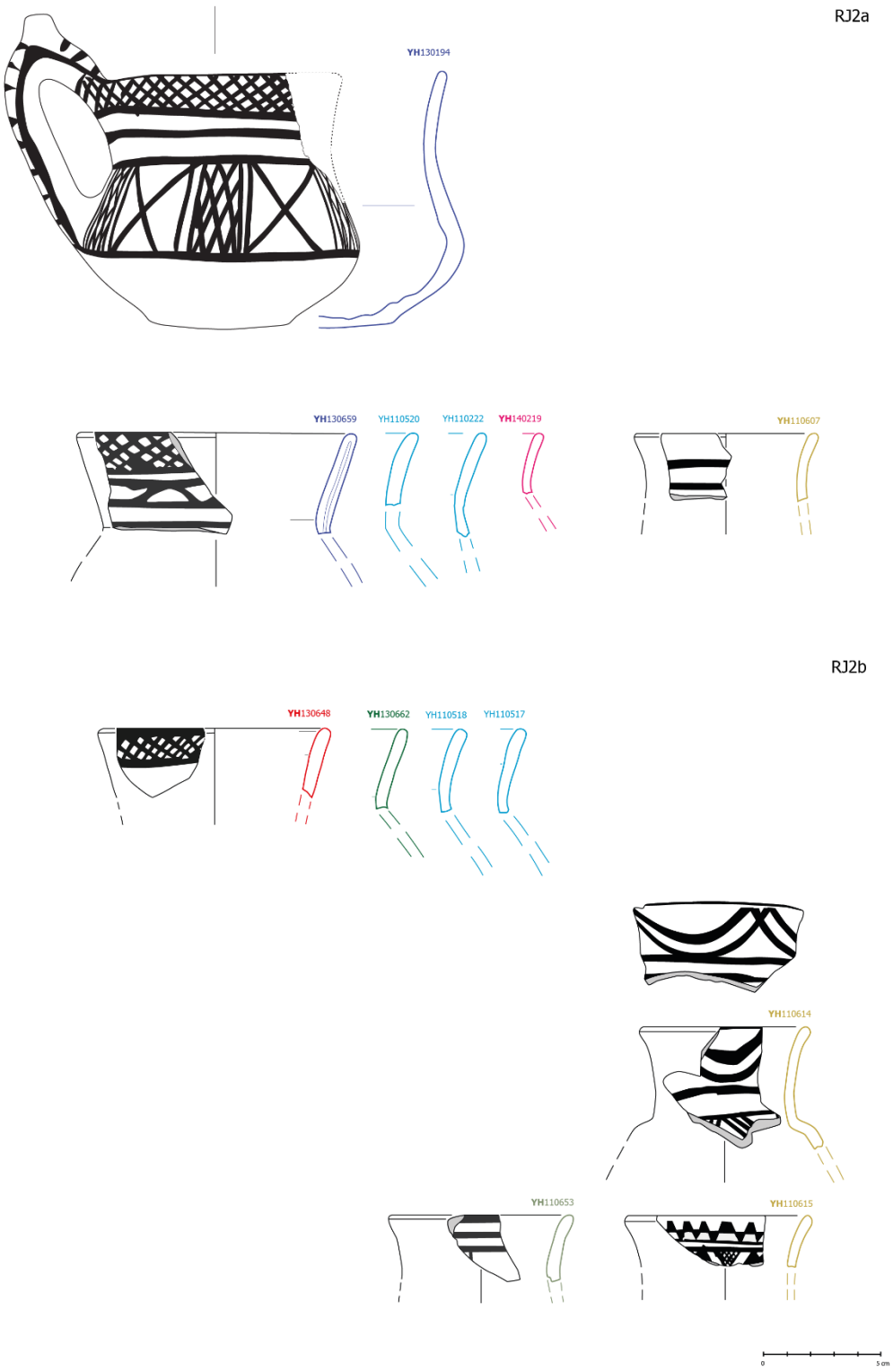


Figure 104. RJ2 round-mouthed jugs

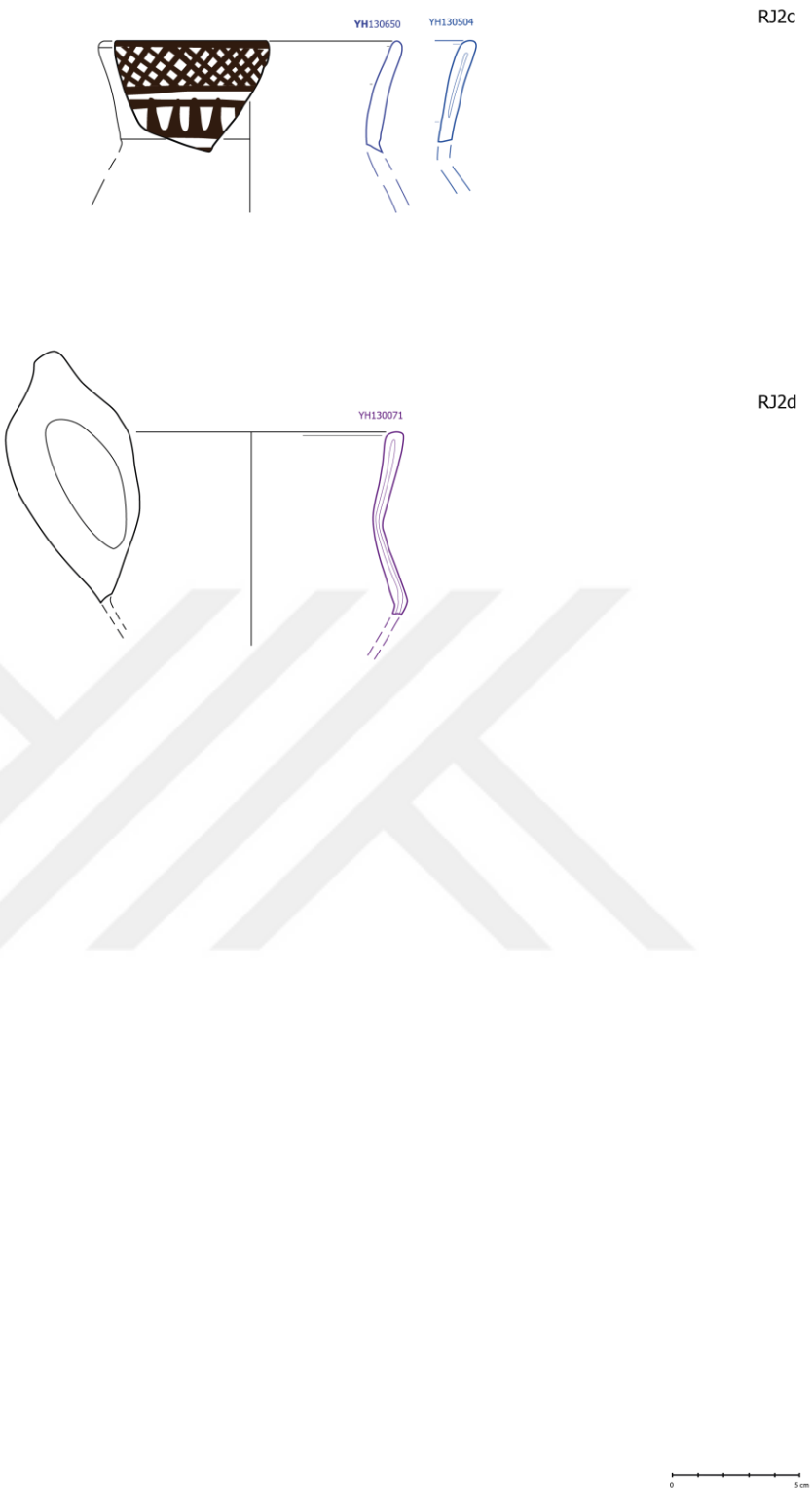


Figure 105. RJ2 round-mouthed jugs

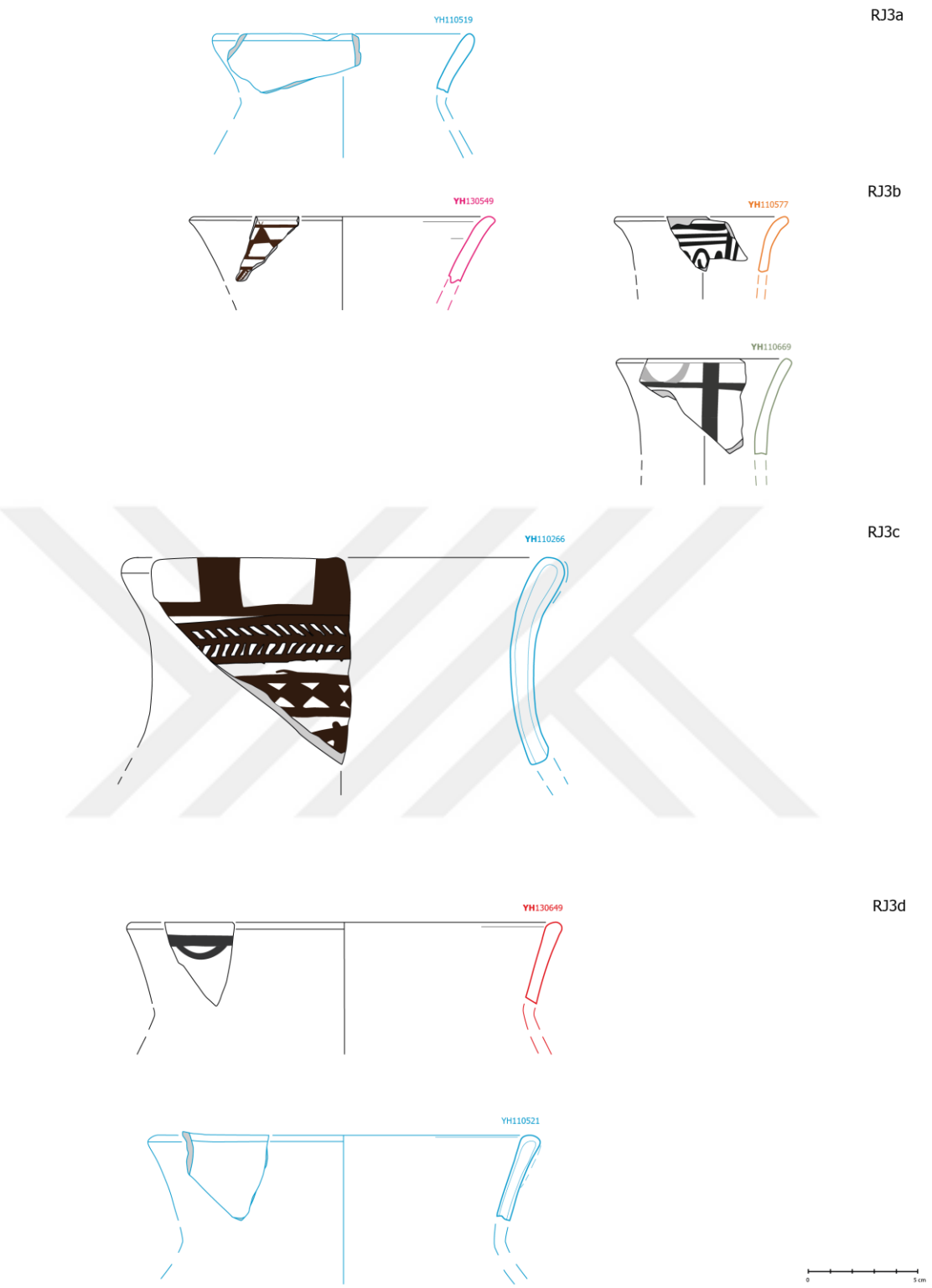


Figure 106. RJ3 round-mouthed jugs

| YH-No | Area | Main Grid | Sub-Grid | PL | Deposit | Phase | Form-Main | Form Group | Main Type | Type | Diameter |
|---|---|---|---|---|---|---|---|---|---|---|---|
| 110222 | 1 | E 8/ | d9 | 34 | P41 | I-9 | Round mouthed jug | RJ2a | T4 | R4 | 12-10% |
| 110266 | 1 | E 8/ | d 9 | 34 | P41 | I-9 | Round mouthed jug | RJ3c | T3 | R3 | 30-9% |
| 110271 | 1 | E 8/ | d9 | 34 | P41 | I-9 | Round mouthed jug | RJ1d | T1 | R1 | 25-19% |
| 110517 | 1 | E 8/ | d9 | 34 | P41 | I-9 | Round mouthed jug | RJ2b | T1 | R1 | 14-9% |
| 110518 | 1 | E 8/ | d9 | 34 | P41 | I-9 | Round mouthed jug | RJ2b | T1 | R1 | 14-12% |
| 110519 | 1 | E 8/ | d9 | 34 | P41 | I-9 | Round mouthed jug | RJ3a | T4 | R4 | 12-16% |
| 110520 | 1 | E 8/ | d9 | 34 | P41 | I-9 | Round mouthed jug | RJ2a | T4 | R4 | 12-14% |
| 110521 | 1 | E 8/ | d9 | 34 | P41 | I-9 | Round mouthed jug | RJ3d | T5 | R5 | 18-6% |
| 110577 | 1 | E 8/ | f10 | 60 | P34 | I-9 | Round mouthed jug | RJ3b | T1 | R1 | 8-12% |
| 110607 | 1 | E 8/ | f10 | 61 | P34 | I-9 | Round mouthed jug | RJ2a | T1 | R1 | 8-12% |
| 110614 | 1 | E 8/ | f10 | 61 | P34 | I-9 | Round mouthed jug | RJ2b | T1 | R1 | 8-25% |
| 110615 | 1 | E 8/ | f10 | 61 | P34 | I-9 | Round mouthed jug | RJ2b | T1 | R1 | 8-20% |
| 110653 | 1 | E 8/ | f10 | 62 | P34 | I-9 | Round mouthed jug | RJ2b | T1 | R1 | 8-12% |
| 110669 | 1 | E 8/ | f10 | 62 | P34 | I-9 | Round mouthed jug | RJ3b | T2? | R2? | 12-12% |
| 130071 | 1 | E 8/ | d 8 | 28 | P87 | I-9/I-10 | Round mouthed jug | RJ2d | T1 | R1 | 12-65% |
| 130194 | 1 | E 8/ | d 8 | 48 | R59 | I-11 | Round mouthed jug | RJ2a | T2 | R2 | 14-95% |
| 130459 | 1 | E 8/ | d8 | 34 | R59 | I-11 | Round mouthed jug | RJ1c | T1 | R1 | 12-6% |
| 130470 | 1 | E 8/ | d8 | 34 | R59 | I-11 | Round mouthed jug | RJ1a | T4 | R4 | 16-9% |
| 130483 | 1 | E 8/ | d8 | 48 | R59 | I-11 | Round mouthed jug | RJ1a | T1 | R1 | 12-7% |
| 130504 | 1 | E 8/ | d8 | 48 | R59 | I-11 | Round mouthed jug | RJ2c | T1 | R1 | 14-11% |
| 130528 | 1 | E 8/ | d8 | 28 | P87 | I-9/I-10 | Round mouthed jug | RJ1c | T4 | R4 | 12-25% |
| 130533 | 1 | E 8/ | d8 | 28 | P87 | I-9/I-10 | Round mouthed jug | RJ1c | T4 | R4 | 8-20% |
| 130549 | 1 | E 8/ | d8 | 25 | P78 | I-9/I-10 | Round mouthed jug | RJ3b | T1 | R1 | 14-5% |
| 130593 | 1 | E 8/ | d8 | 34 | R59 | I-11 | Round mouthed jug | RJ1b | T3 | R3 | 14-6% |
| 130594 | 1 | E 8/ | d8 | 34 | R59 | I-11 | Round mouthed jug | RJ1d | T1 | R1 | 20-9% |
| 130648 | 1 | E 8/ | d8 | 48 | R59 | I-11 | Round mouthed jug | RJ2b | T2 | R2 | 10-12% |
| 130649 | 1 | E 8/ | d8 | 48 | R59 | I-11 | Round mouthed jug | RJ3d | T1 | R1 | 20-5% |
| 130650 | 1 | E 8/ | d8 | 48 | R59 | I-11 | Round mouthed jug | RJ2c | T2 | R2 | 12-17% |
| 130659 | 1 | E 8/ | d8 | 48 | R59 | I-11 | Round mouthed jug | RJ2a | T3 | R3 | 12-9% |
| 130662 | 1 | E 8/ | d8 | 49 | R59 | I-11 | Round mouthed jug | RJ2b | T1 | R1 | 10-14% |
| 130670 | 1 | E 8/ | d8 | 48 | R59 | I-11 | Round mouthed jug | RJ1a | T1 | R1 | 18-13% |
| 140219 | 1 | E 8/ | d8 | 63 | P78 | I-9/I-10 | Round mouthed jug | RJ2a | T2 | R2 | 8-12% |

Figure 107. Descriptive Catalogue of RJ jugs

| YH-No | Fabric | CoreColor-Inclusion(Density+Size) | Surface/Out | Surface/In |
|---|---|---|---|---|
| 110222 | O-C+L | O-C(H-F), L(H-F), G(H-F), M | Burnished | Smoothed |
| 110266 | G-C+G | G-C(H-M, H-F), L(H-M, H-F), G(H-M, H-F), M | Burnished | Burnished |
| 110271 | G-L | G-C(F-M, M-F), L(H-F), G(F-C, H-F), M | Burnished-Slip | Burnished-Slip |
| 110517 | G-C+L | G-C(F-C, H-F), L(H-F), G(H-F), M | Burnished | Burnished |
| 110518 | O-C+L | O-C(F-C, H-F), L(H-F), G(H-F), M | Burnished | Burnished |
| 110519 | G-C+L | G-C(F-C, H-F), L(H-F), G(H-F), M | Burnished | Burnished |
| 110520 | O-C+L | O-C(H-F), L(F-M, H-F), G(H-F), M | Burnished | Smoothed |
| 110521 | B-C+L | B-C(H-F), L(F-M, H-F), G(H-F), M | Polished | Polished |
| 110577 | O | O-C(F-F), L(F-F), G(F-F), M | Burnished-Slip | Burnished-Slip |
| 110607 | O | O-C(F-F), L(F-F) G(H-F), M | Burnished | Smoothed |
| 110614 | O-G | O-C(F-F), L(F-M, F-F), G(F-M, H-F), M | Burnished | Smoothed |
| 110615 | O-G | O-C(F-F), L(F-M, H-F), G(F-M, H-F), M | Burnished | Smoothed |
| 110653 | O | O-C(F-F), L(F-F), G(F-F), M | Burnished-Slip | Smoothed-Slip |
| 110669 | O-L | O-C(F-F), L(F-M, M-F), G(F-M, M-F), M | Burnished | Smoothed |
| 130071 | O-L | O-C(F-F), L(F-M, H-F), G(H-F), M | Burnished | Smoothed |
| 130194 | O-L | O-C(F-F), L(F-M, H-F), G(H-F), M | Burnished | Smoothed |
| 130459 | O-C+L | O-C(F-M, H-F), L(H-F), G(H-F), M | Burnished | Burnished |
| 130470 | O-C+L | O-C(F-M, H-F), L(F-M, H-F), G(H-F), M | Burnished-Slip | Burnished-Slip |
| 130483 | O-C | O-C(H-F), L(H-F), G(M-F), M | Burnished | Smoothed |
| 130504 | G-C+L | G-C(F-M, H-F), L(H-F), G(M-F), M | Burnished | Smoothed |
| 130528 | O-C+L | O-C(M-F), L(F-C, F-M, H-F), G(H-F), M | Smoothed | Smoothed |
| 130533 | O-C+L | O-C(M-F), L(H-F), G(H-F), M | Burnished-Slip? | Smoothed |
| 130549 | O-G | O-C(H-F), L(H-F), G(F-M, H-F), M | Burnished | Burnished |
| 130593 | G-G | G-C(F-F), L(H-F), G(F-M, H-F), M | Smoothed | Smoothed |
| 130594 | O-C+L | O-C(H-F), L(H-F), G(H-F), M | Burnished | Burnished |
| 130648 | O-C+L | O-C(F-F), L(H-F) G(M-F), M | Burnished | Smoothed |
| 130649 | G-C | G-C(H-F), L(M-F), G(H-F), M | Burnished | Burnished |
| 130650 | O-C+L | O-C(F-F), L(H-F) G(F-F), M | Burnished | Smoothed |
| 130659 | G-L | G-C(H-F), L(F-M, H-F), G(H-F), M | Burnished | Smoothed |
| 130662 | O-C+L | O-C(F-F), L(H-F) G(M-F), M | Burnished | Smoothed |
| 130670 | O-L | O-C(F-M, F-F), L(H-F) G(F-M, F-F), M | Burnished | Burnished |
| 140219 | O-C+L | O-C(H-F), L(H-F), G(H-F), M | Smoothed | Smoothed |

Figure 108. Descriptive Catalogue of RJ jugs

| YH-No | Color/Out | Color/In | Color/Fabric-Core | Color / Paint | Decoration |
|---|---|---|---|---|---|
| 110222 | 5YR 6/4 | 5YR 6/3 | 5YR 5/4 | | |
| 110266 | 2.5YR 7/6 | 2.5YR 7/6 | 5YR 8/4 - N 5/0 | 2.5YR 3/1 | Herringbone-RectFill-Lozenge |
| 110271 | 10R 5/6 | 10R 5/6 | N 4/0 | 5YR 3/2 | Zigzags-LineHorz-LineDiag |
| 110517 | 5YR 7/4 | 7.5YR 5/2 | 5YR 8/4 – 7.5YR 6/1 | | |
| 110518 | 2.5YR 7/4 | 2.5YR 7/4 | 5YR 8/4 | | |
| 110519 | 10YR 8/3 | 10YR 8/3 | 5YR 8/4 | | |
| 110520 | 10YR 8/3 | 5YR 8/4 | 5YR 8/4 | | |
| 110521 | 5YR 5/2 | 5YR 5/2 | 7.5YR 7/4 – N 3/0 | | Black Polished |
| 110577 | 5YR 6/6 | 5YR 6/6 | 5YR 6/6 | 5YR 4/1 | WavyLine-LineHorz-LineVert |
| 110607 | 5YR 6/6 | 5YR 6/6 | 5YR 6/6 | 5YR 2/1 | LineHorz |
| 110614 | 2.5YR 7/6 | 2.5YR 7/6 | 2.5YR 7/6 | 2.5YR 2/1 | Festoons-LineDiag-LineHorz |
| 110615 | 5YR 7/4 | 5YR 7/4 | 5YR 7/4 | 5YR 3/1 | TriangFillNet-TriangFill-LineHorz |
| 110653 | 10YR 8/3 | 5YR 7/3 | 5YR 6/6 | 10YR 7/1 | LineHorz-LineVert |
| 110669 | 7.5YR 8/4 | 7.5YR 8/4 | 7.5YR 6/6 | 10YR 3/1 | LineHorz-LineVert |
| 130071 | 5YR 6/4 | 5YR 6/4 | N 4/0 | | |
| 130194 | 5YR 8/4 | 7.5YR 8/3 | 2.5YR 7/6 | 5YR 2/1 | NetPattern-Cross-LineHorz |
| 130459 | 7.5YR 7/3 | 7.5YR 6/4 | 2.5Y 7/2 | | |
| 130470 | 2.5Y 8/3 | 2.5Y 8/3 – 7.5YR 8/4 | 2.5YR 3/6 | | |
| 130483 | 5YR 6/4 | 5YR 6/4 | 5YR 6/4 – 7.5Y 7/2 | | |
| 130504 | 5YR 7/4 | 7.5YR 7/4 | 7.5YR 7/4 – 5 Y 7/2 | | |
| 130528 | 7.5YR 8/3 | 7.5YR 8/3 | 5YR 8/4 | 2.5YR 3/1 | LineHorz-NetPattern-LineDiag |
| 130533 | 10YR 8/2 | 5YR 8/3 | 5YR 8/4 | 5YR 3/2 | TriangFillNet-LineHorz |
| 130549 | 2.5YR 6/6 | 2.5YR 7/6 – 8/3 | 7.5 YR 7/6 – 10YR 6/2 | 2.5YR 2/1 | TriangFill-TriangFillNet-LineHorz |
| 130593 | 10YR 8/3 | 10YR 8/3 | 2.5YR 7/4-N 6/0 | 5YR 5/1 | LineVert-NetPattern |
| 130594 | 5YR 8/4 | 2.5YR 6/6 | 2.5YR 7/6 | 2.5YR 3/2 | LineHorz-Bows |
| 130648 | 5YR 8/4 | 7.5YR 8/3 | 2.5YR 7/6 – 8/3 | 5YR 2/1 | NetPattern |
| 130649 | 5YR 7/4 | 5YR 7/4 | 5YR 7/4 – N 5/0 | 7.5YR 6/3 | Bow-LineHorz |
| 130650 | 7.5YR 8/3 | 10YR 8/3 | 5YR 8/4 - N 7/0 | 7.5YR 7/2 | Rays-NetPattern-LineHorz |
| 130659 | 2.5YR 7/4 | 2.5YR 7/4 | 2.5YR 7/4 | 2.5YR 2/3 | NetPattern-WavyLine-LineHorz |
| 130662 | 5YR 8/4 | 5YR 8/4 | 5YR 8/4 | 5YR 1.7/1 | (not clear) NetPattern |
| 130670 | 5YR 4/2 | 5YR 6/6 – 3/2 | 2.5YR 6/6 – 5YR 6/6 | 5YR 2/1 | LineDiag-LineVert-LineHorz |
| 140219 | 2.5YR 7/4 | 2.5YR 7/6 | 2.5YR 7/8 | 2.5YR 3/1 | LineHorz |

Figure 109. Descriptive Catalogue of RJ jugs[46]

[46] LineDiag: Diagonal Line(s); LineHorz: Horizontal Line(s); LineVert: Vertical Line(s); RectFill: Rectangular(s) with solid fill; TriangFill: Triangle(s) with solid fill; TriangFillNet: Triangle(s) with net pattern;

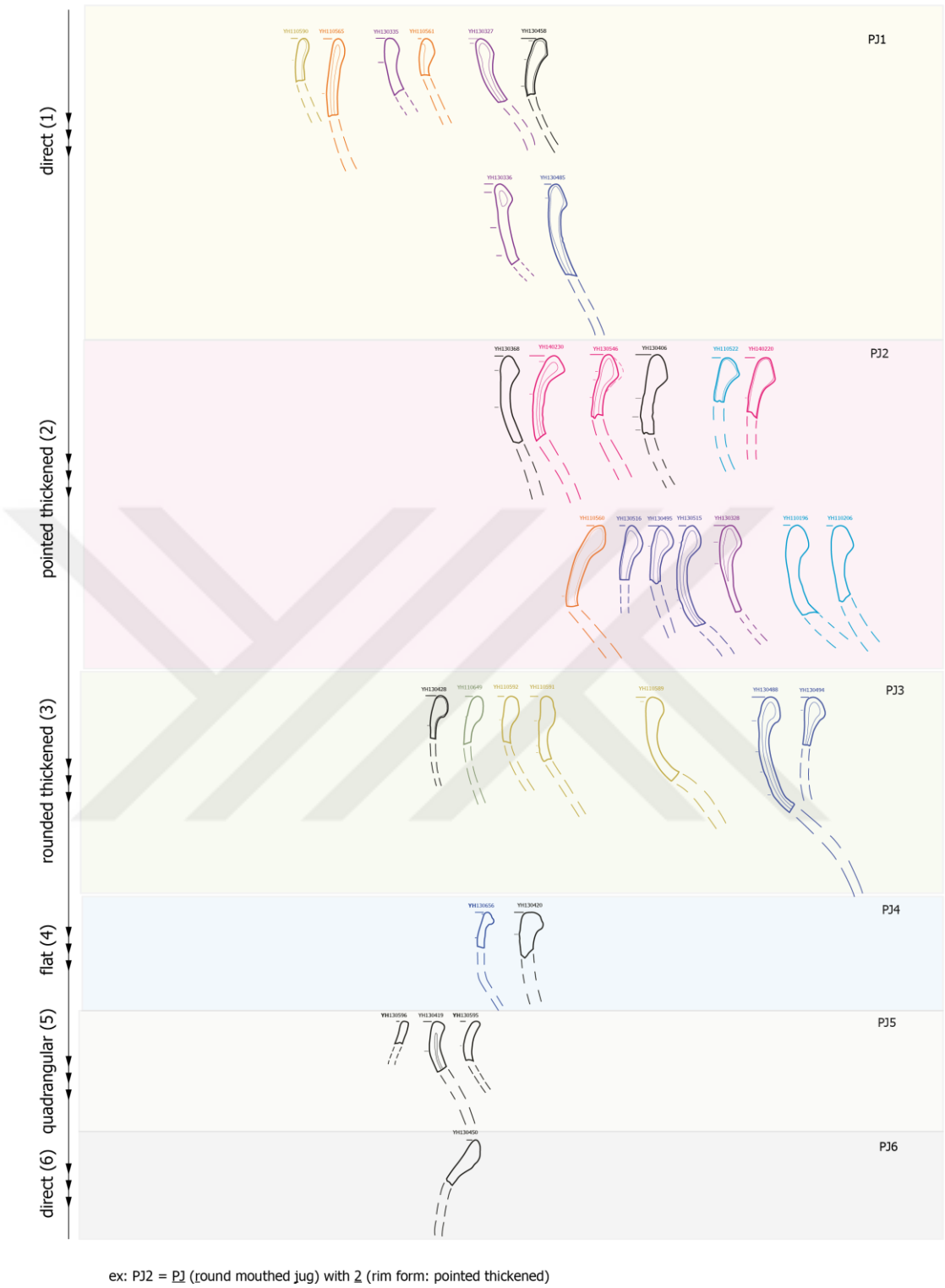


Figure 110. Summary of pinched-mouthed jug types PJ

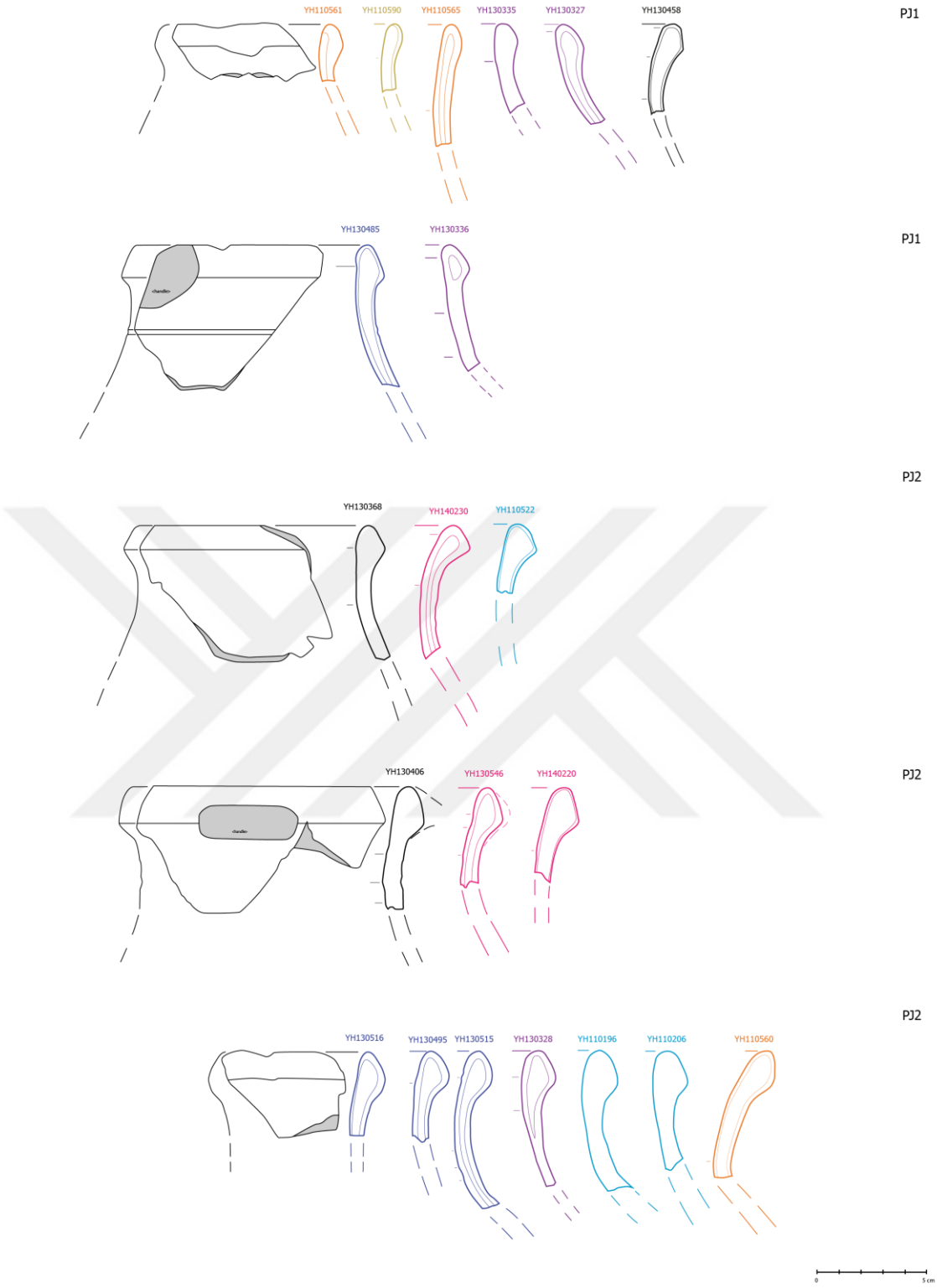


Figure 111. PJ1 and PJ2 pinched-mouthed jugs

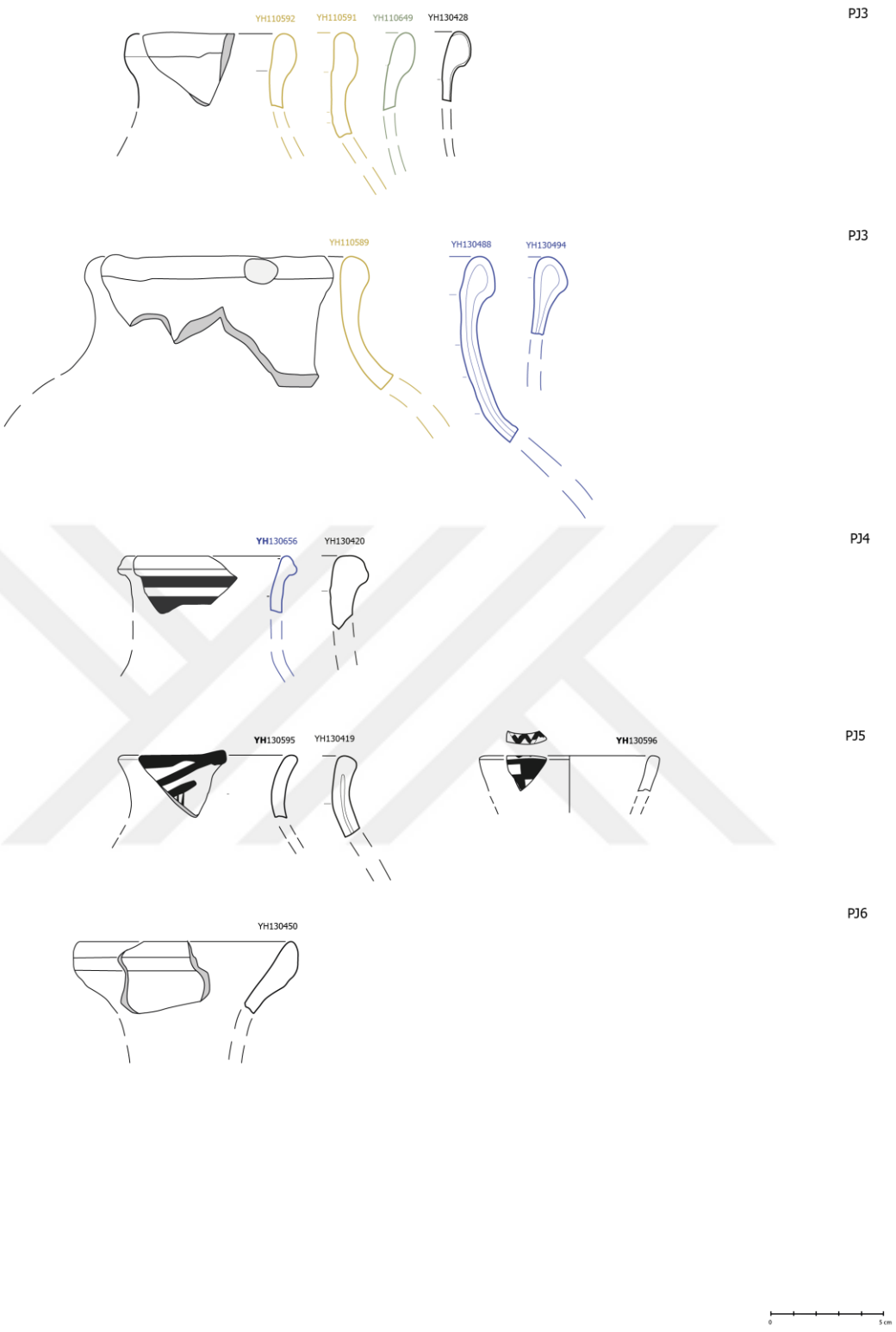


Figure 112. PJ3-PJ6 pinched-mouthed jugs

| YH-No | Area | Main Grid | Sub-Grid | PL | Deposit | Phase | Form-Main | Form Group | Main Type | Type |
|---|---|---|---|---|---|---|---|---|---|---|
| 110196 | 1 | E 8/ | d9 | 34 | P41 | I-9 | Pinched-m. jug | PJ2 | T4 | P4 |
| 110206 | 1 | E 8/ | d9 | 34 | P41 | I-9 | Pinched-m. jug | PJ2 | T4 | P4 |
| 110522 | 1 | E 8/ | d9 | 34 | P41 | I-9 | Pinched-m. jug (m) | PJ2 | T1 | P1 |
| 110560 | 1 | E 8/ | f10 | 60 | P34 | I-9 | Pinched-m. jug (p) | PJ2 | T4 | P4 |
| 110561 | 1 | E 8/ | f10 | 60 | P34 | I-9 | Pinched-m. jug (p) | PJ1 | T1 | P1 |
| 110565 | 1 | E 8/ | f10 | 60 | P34 | I-9 | Pinched-m. jug (h) | PJ1 | T4 | P4 |
| 110589 | 1 | E 8/ | f10 | 61 | P34 | I-9 | Pinched-m. jug (p-m) | PJ3 | T3 | P3 |
| 110590 | 1 | E 8/ | f10 | 61 | P34 | I-9 | Pinched-m. jug | PJ1 | T1 | P1 |
| 110591 | 1 | E 8/ | f10 | 61 | P34 | I-9 | Pinched-m. jug (p-m) | PJ3 | T4 | P4 |
| 110592 | 1 | E 8/ | f10 | 61 | P34 | I-9 | Pinched-m. jug (p-m) | PJ3 | T4 | P4 |
| 110649 | 1 | E 8/ | f10 | 62 | P34 | I-9 | Pinched-m. jug (m) | PJ3 | T2 | P2 |
| 130327 | 1 | E 8/ | d8 | 28 | P87 | I-9/I-10 | Pinched-m. jug (m) | PJ1 | T2 | P2 |
| 130328 | 1 | E 8/ | d8 | 28 | P87 | I-9/I-10 | Pinched-m. jug (p) | PJ2 | T1 | P1 |
| 130335 | 1 | E 8/ | d8 | 28 | P87 | I-9/I-10 | Pinched-m. jug (h) | PJ1 | T4 | P4 |
| 130336 | 1 | E 8/ | d8 | 28 | P87 | I-9/I-10 | Pinched-m. jug (p) | PJ1 | T5 | P5 |
| 130368 | 1 | E 8/ | d8 | 34 | R59 | I-11 | Pinched-m. jug (p) | PJ2 | T4 | P4 |
| 130406 | 1 | E 8/ | d8 | 34 | R59 | I-11 | Pinched-m. jug (h) | PJ2 | T4 | P4 |
| 130419 | 1 | E 8/ | d8 | 34 | R59 | I-11 | Pinched-m. jug (p) | PJ5 | T1 | P1 |
| 130420 | 1 | E 8/ | d8 | 34 | R59 | I-11 | Pinched-m. jug (m) | PJ4 | T5 | P5 |
| 130428 | 1 | E 8/ | d8 | 34 | R59 | I-11 | Pinched-m. jug (p) | PJ3 | T5 | P5 |
| 130450 | 1 | E 8/ | d8 | 34 | R59 | I-11 | Pinched-m. jug (m) | PJ6 | T1 | P1 |
| 130458 | 1 | E 8/ | d8 | 34 | R59 | I-11 | Pinched-m. jug (p) | PJ1 | T3 | P3 |
| 130485 | 1 | E 8/ | d8 | 48 | R59 | I-11 | Pinched-m. jug (h) | PJ1 | T3 | P3 |
| 130488 | 1 | E 8/ | d8 | 48 | R59 | I-11 | Pinched-m. jug (p-m) | PJ3 | T3 | P3 |
| 130494 | 1 | E 8/ | d8 | 48 | R59 | I-11 | Pinched-m. jug (m) | PJ3 | T1 | P1 |
| 130495 | 1 | E 8/ | d8 | 48 | R59 | I-11 | Pinched-m. jug (m) | PJ2 | T3 | P3 |
| 130515 | 1 | E 8/ | d8 | 48 | R59 | I-11 | Pinched-m. jug (h) | PJ2 | T1 | P1 |
| 130516 | 1 | E 8/ | d8 | 48 | R59 | I-11 | Pinched-m. jug (m) | PJ2 | T3 | P3 |
| 130546 | 1 | E 8/ | d8 | 25 | P78 | I-9/I-10 | Pinched-m. jug (h) | PJ2 | T2 | P2 |
| 130595 | 1 | E 8/ | d8 | 34 | R59 | I-11 | Pinched-m. jug | PJ5 | T1 | P1 |
| 130596 | 1 | E 8/ | d8 | 34 | R59 | I-11 | Pinched-m. jug | PJ5 | T1 | P1 |
| 130656 | 1 | E 8/ | d8 | 48 | R59 | I-11 | Pinched-m. jug | PJ4 | T4 | P4 |
| 140220 | 1 | E 8/ | d8 | 63 | P78 | I-9/I-10 | Pinched-m. jug (m) | PJ2 | T1 | P1 |
| 140230 | 1 | E 8/ | d8 | 63 | P78 | I-9/I-10 | Pinched-m. jug (h) | PJ2 | T1 | P1 |

Figure 113. Descriptive Catalogue of PJ jugs[47]

[47] Pinched-m. jug (m): Spout part; Pinched-m jug (p): the part pinched; Pinched-m jug (h): the part with handle; Pinched-m jug (p-m): the part with spout and pinched.

| YH-No | Fabric | CoreColor-Inclusion(Density+Size) | Surface/Out | Surface/In |
|---|---|---|---|---|
| 110196 | O-L | O-C(F-F), L(F-C, H-M, H-F), G(H-F), M | Smoothed | Smoothed |
| 110206 | O-L | O-C(F-F), L(F-C, H-M, H-F), G(H-F), M | Smoothed | Smoothed |
| 110522 | G-C+L | G-C(H-F), L(F-M, H-F), G(H-F), M | Smoothed | Smoothed |
| 110560 | O-L | O-C(F-F), L(F-C, H-M, H-F), G(H-F), M | Smoothed | Smoothed |
| 110561 | O-G | O-C(F-F), L(F-M, H-F) G(M-F), M | Smoothed | Smoothed |
| 110565 | O-G | O-C(M-F), L(F-C, F-M, H-F), G(F-C, F-M, H-F), M | Smoothed | Smoothed |
| 110589 | O-L | O-C(F-F), L(F-C, H-M, H-F), G(F-C, H-F), M | Smoothed | Smoothed |
| 110590 | G-G | G-C (F-F), L(H-F) G(M-M, H-F), M | Smoothed | Smoothed |
| 110591 | O-L | O-C(F-F), L(F-C, H-M, H-F), G(H-F), M | Smoothed | Smoothed |
| 110592 | O-L | O-C(F-F), L(H-F), G(H-F), M | Smoothed | Smoothed |
| 110649 | O-L | O-C(F-F), L(H-F), G(H-F), M | Smoothed | Smoothed |
| 130327 | O-L | O-C(F-F), L(F-C, H-M, H-F), G(H-F), M | Smoothed | Smoothed |
| 130328 | G-C+L | G-C(H-F), L(F-M, H-F), G(H-F), M | Smoothed | Smoothed |
| 130335 | O-L | O-C(F-F), L(H-F), G(H-F), M | Smoothed | Smoothed |
| 130336 | O-L | O-C(F-F), L(H-F), G(H-F), M | Smoothed | Smoothed |
| 130368 | O-L | O-C(H-F), L(F-C, H-F), G(H-F), M | Smoothed | Smoothed |
| 130406 | O-G | O-C(M-F), L(F-C, F-M, H-F), G(F-C, F-M, H-F), M | Smoothed | Smoothed |
| 130419 | O-L | O-C(F-F), L(H-F), G(H-F), M | Burnished | Smoothed |
| 130420 | O-L | O-C(F-F), L(F-C, H-M, H-F), G(H-F), M | Smoothed | Smoothed |
| 130428 | O-L | O-C(F-F), L(H-F), G(H-F), M | Smoothed | Smoothed |
| 130450 | O-L | O-C(F-F), L(H-M, H-F), G(F-C, H-F), M | Smoothed | Smoothed |
| 130458 | G-C+L | G-C(H-F), L(F-M, H-F), G(H-F), M | Smoothed | Smoothed |
| 130485 | G-C | G-C(F-M, H-F), L(F-F, F-M), G(H-F), M | Smoothed | Smoothed |
| 130488 | G-L | G-C(F-F), L(F-C, H-M, H-F), G(H-F), M | Smoothed | Smoothed |
| 130494 | G-G | G-C (F-F), L(H-F) G(M-M, H-F), M | Smoothed | Smoothed |
| 130495 | G-C+L | G-C(H-F), L(F-M, H-F), G(H-F), M | Smoothed | Smoothed |
| 130515 | G-C+L | G-C(H-F), L(F-M, H-F), G(H-F), M | Smoothed | Smoothed |
| 130516 | G-C+L | G-C(H-F), L(F-M, H-F), G(H-F), M | Smoothed | Smoothed |
| 130546 | G-C | G-C(F-M, H-F), L(F-M, H-F), G(F-M, H-F), M | Smoothed | Smoothed |
| 130595 | O-L | O-C(F-F), L(H-F), G(H-F), M | Burnished | Smoothed |
| 130596 | O-L | O-C(F-F), L(F-F), G(F-F), M | Burnished | Smoothed |
| 130656 | O-L | O-C(F-F), L(F-F), G(F-F), M | Smoothed | Smoothed |
| 140220 | G-C+L | G-C(H-F), L(F-M, H-F), G(H-F), M | Smoothed | Smoothed |
| 140230 | G-C | G-C(F-M, H-F), L(F-M, H-F), G(F-M, H-F), M | Smoothed | Smoothed |

Figure 114. Descriptive Catalogue of PJ jugs

| YH-No | Color/Out | Color/In | Color/Fabric-Core | Color / Paint | Decoration |
|---|---|---|---|---|---|
| 110196 | 5Y 7/1 | 7.5YR 7/3 | 2.5YR 6/3 | | |
| 110206 | 5Y 7/1 | 7.5YR 7/3 | 2.5YR 6/3 | | |
| 110522 | 7.5YR 7/4 | 7.5YR 7/4 | 7.5YR 8/4 – N 5/0 | | |
| 110560 | 2.5Y 8/2 | 5YR 8/3 | 7.5YR 7/1 | | |
| 110561 | 5YR 6/4 | 5YR 6/4 | 2.5YR 6/6-6/1 | | |
| 110565 | 2.5Y 7/1 – 5YR 8/3 | 5YR 7/3 | 5YR 8/4 | | |
| 110589 | 5Y 8/1 | 5Y 8/1 | 7.5YR 5/3 | | |
| 110590 | 5YR 6/4 | 5YR 5/1 | 5YR 7/2 | | |
| 110591 | 2.5Y 8/2 | 5YR 8/3 | 5YR 7/6 | | |
| 110592 | 2.5Y 8/3 | 5YR 7/4 | 2.5YR 6/6 | | |
| 110649 | 5YR 8/4 | 2.5YR 7/4 | 2.5YR 7/6 | | |
| 130327 | 5YR 8/3 – 10R 6/6 | 5YR 8/3 – 8/1 | 2.5YR 7/3 – N 7/0 | | |
| 130328 | 5YR 7/4 | 5YR 7/4 | N 3/0 | | |
| 130335 | 5YR 8/1 | 5YR 7/1 | 5YR 7/3 | | |
| 130336 | 10YR 7/2 | 10YR 7/2 | 5YR 7/3 | | |
| 130368 | 10YR 7/2 | 5YR 7/4 | 5YR 7/4 | | |
| 130406 | 10YR 7/2 | 2.5YR 7/4 | 2.5YR 7/4 | | |
| 130419 | 5YR 7/4 | 5YR 8/4 | 2.5YR 7/4 | | |
| 130420 | 10YR 7/1 | 10YR 7/1 | 2.5YR 7/4 | | |
| 130428 | 5Y 8/1 | 5YR 8/3 | 2.5YR 7/2 | | |
| 130450 | 2.5YR 6/6 | 2.5YR 6/4 | 2.5YR 7/4 | | |
| 130458 | 5YR 8/2 | 5YR 8/3 | 5YR 8/4 - N 7/0 | | |
| 130485 | 5YR 8/3 | 10YR 7/3 | N 5/0 | | |
| 130488 | 7.5YR 8/2 | 7.5YR 8/3 | N 7/0 | | |
| 130494 | 10YR 7/3 | 7.5YR 7/3 | 7.5Y 7/2 | | |
| 130495 | 5Y 8/3 | 5Y 8/3 | 5Y 7/4 | | |
| 130515 | 7.5YR 8/3 | 7.5YR 8/3 | N 4/1 | | |
| 130516 | 10YR 8/3 | 5YR 8/4 | N 6/0 | | |
| 130546 | 2.5YR 6/6 | 2.5YR 6/6 | N 5/0 | | |
| 130595 | 5YR 8/4 | 2.5YR 6/4 | 2.5YR 6/6 | 7.5YR 3/3 | LineDiag-LineVert |
| 130596 | 5YR 7/6 | 5YR 7/6 | 5YR 7/6 | 5YR 2/1 | RectFill-WavyLine |
| 130656 | 2.5Y 8/2 | 2.5Y 5/1 | 5YR 8/4 | 2.5Y 3/1 | LineHorz |
| 140220 | 5YR 7/4 | 5YR 7/4 | N 6/0 | | |
| 140230 | 7.5YR 7/4 | 5YR 6/2 | 7.5YR 6/6 – N 5/0 | | |

Figure 115. Descriptive Catalogue of PJ jugs

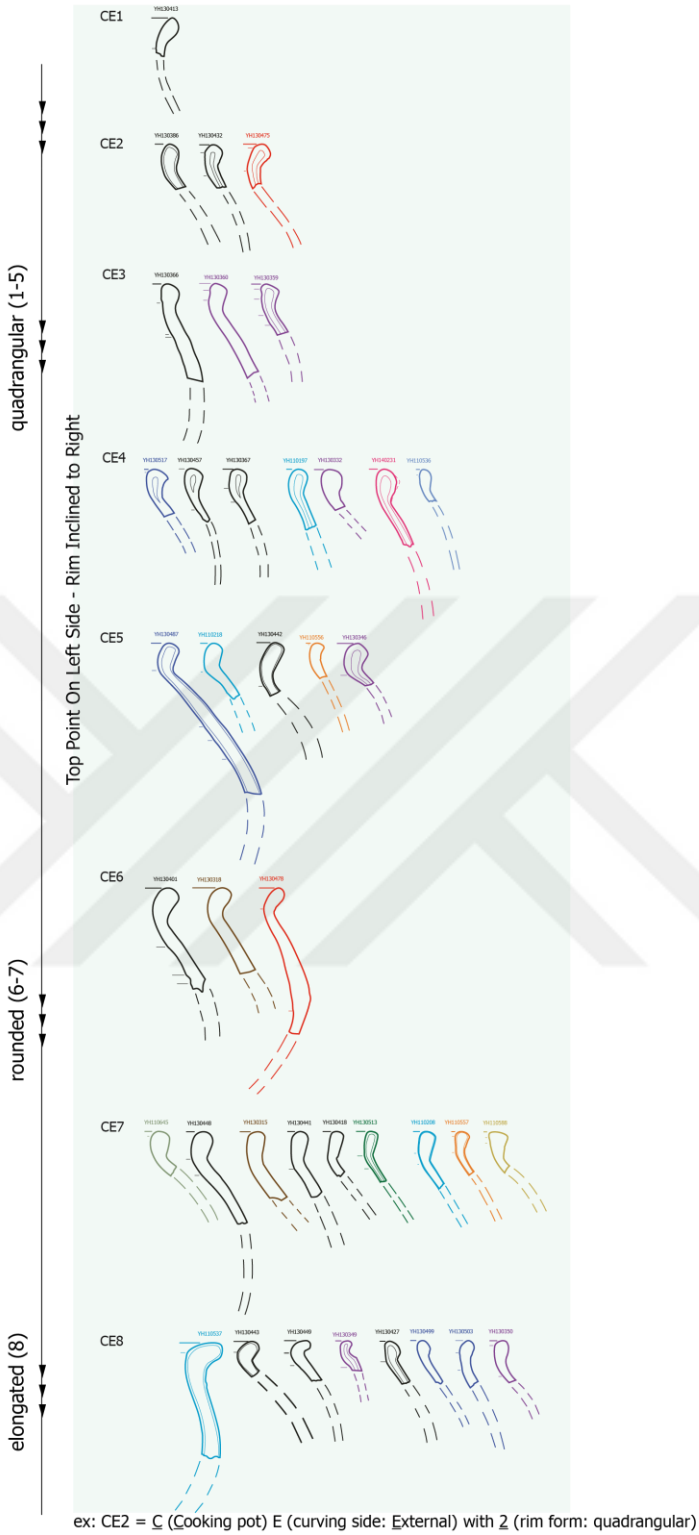


Figure 116. Summary of cooking pot types CE

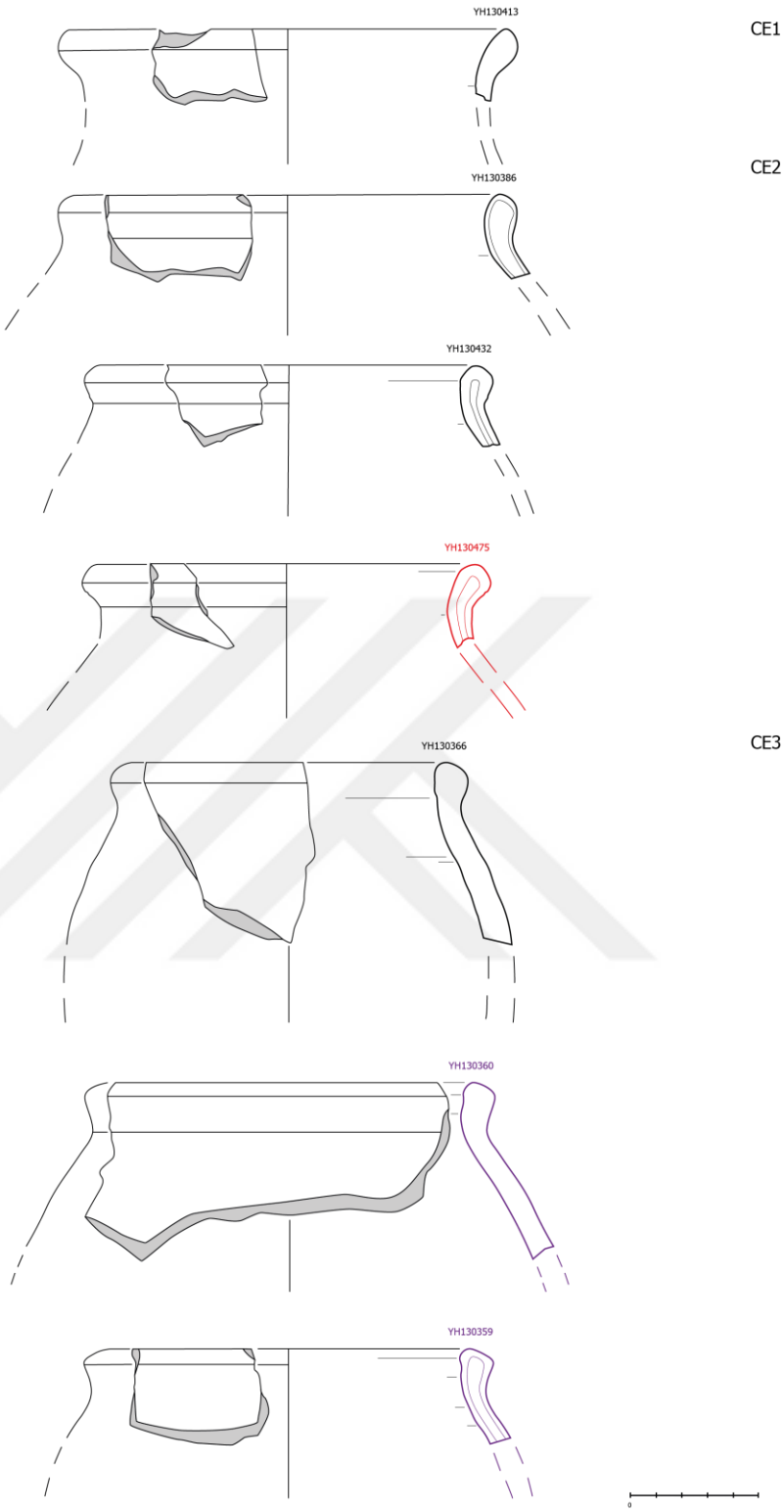


Figure 117. CE1-CE3 cooking pots

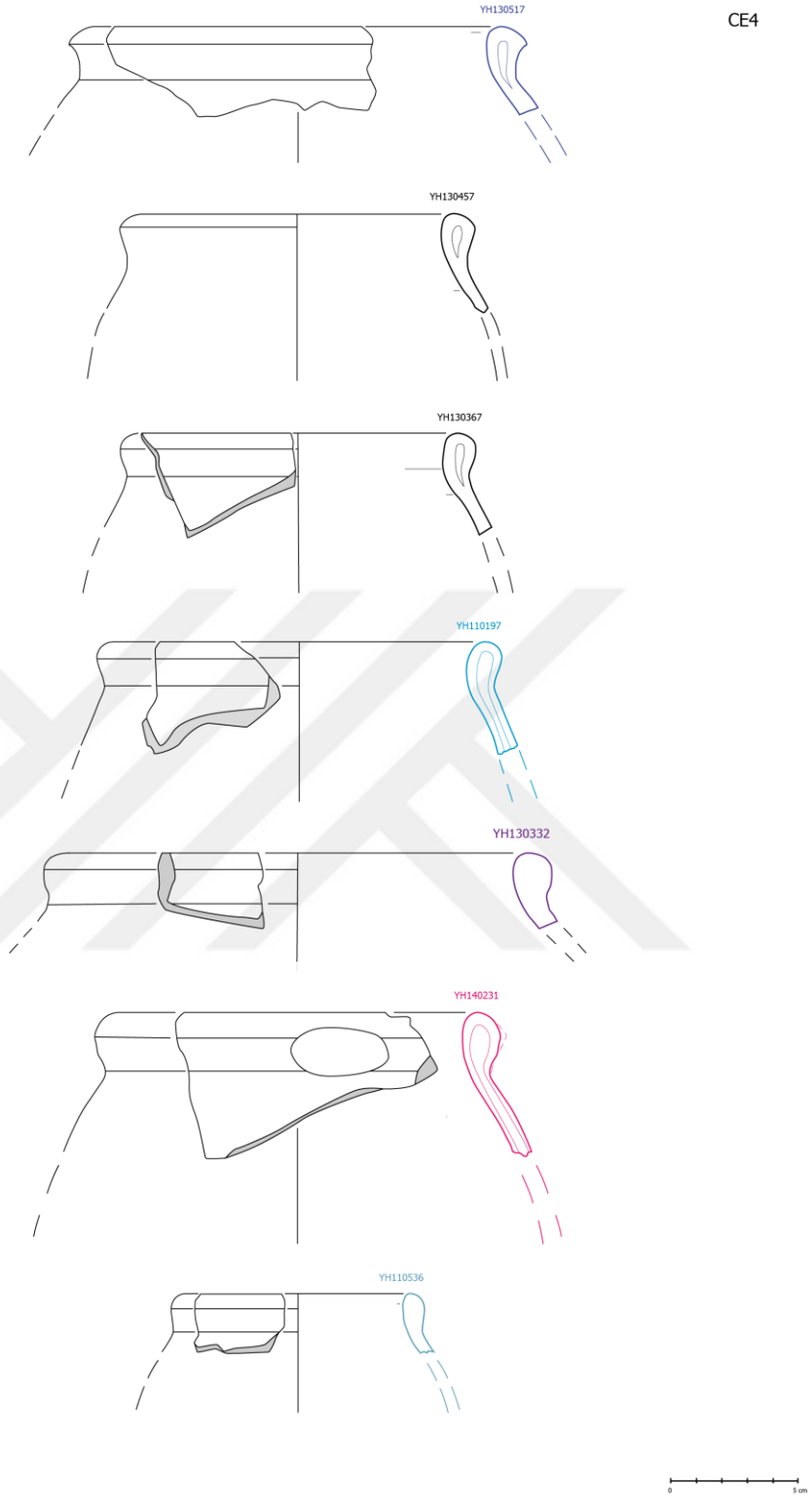


Figure 118. CE4 cooking pots

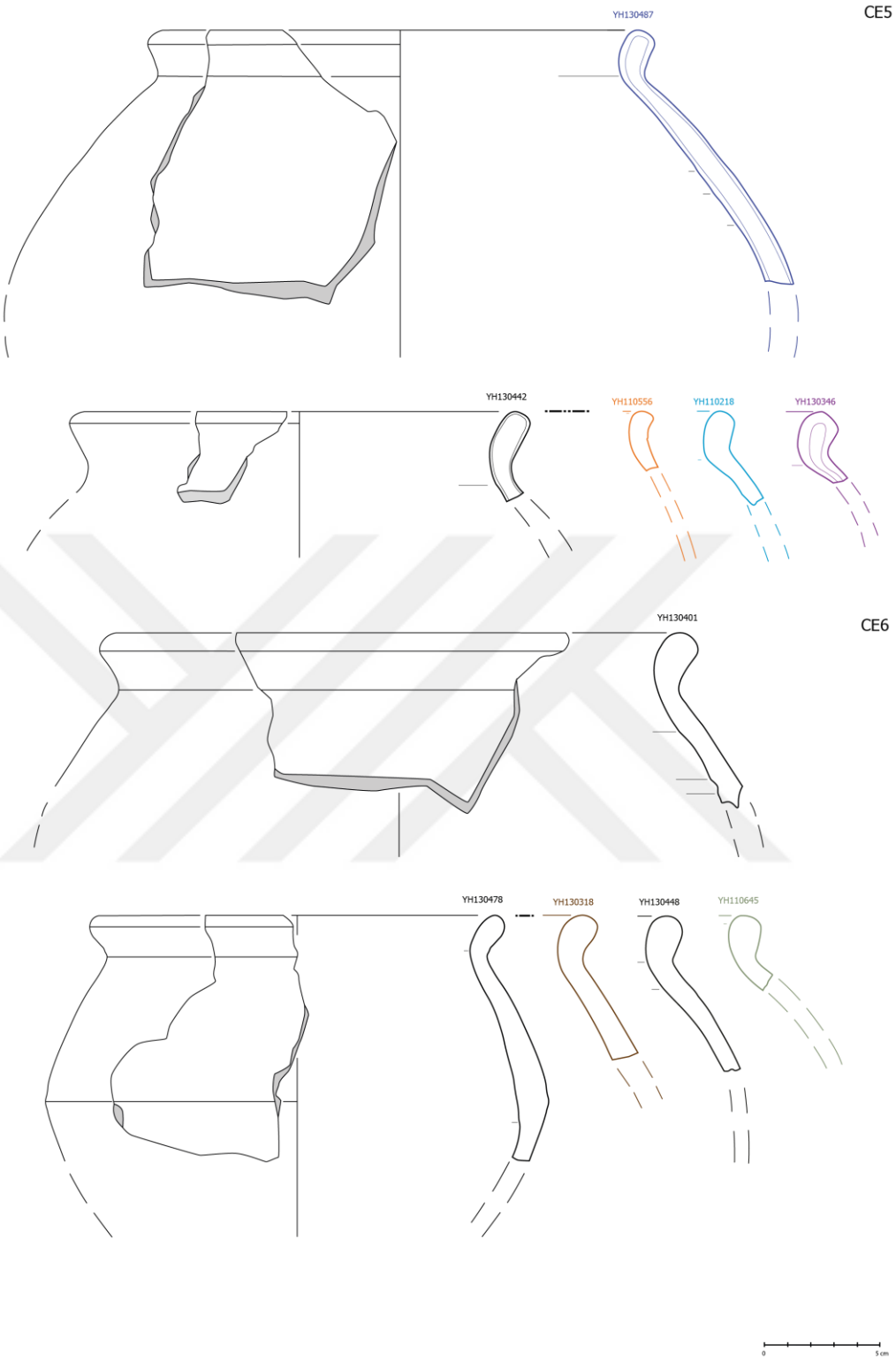


Figure 119. CE5-CE6 cooking pots

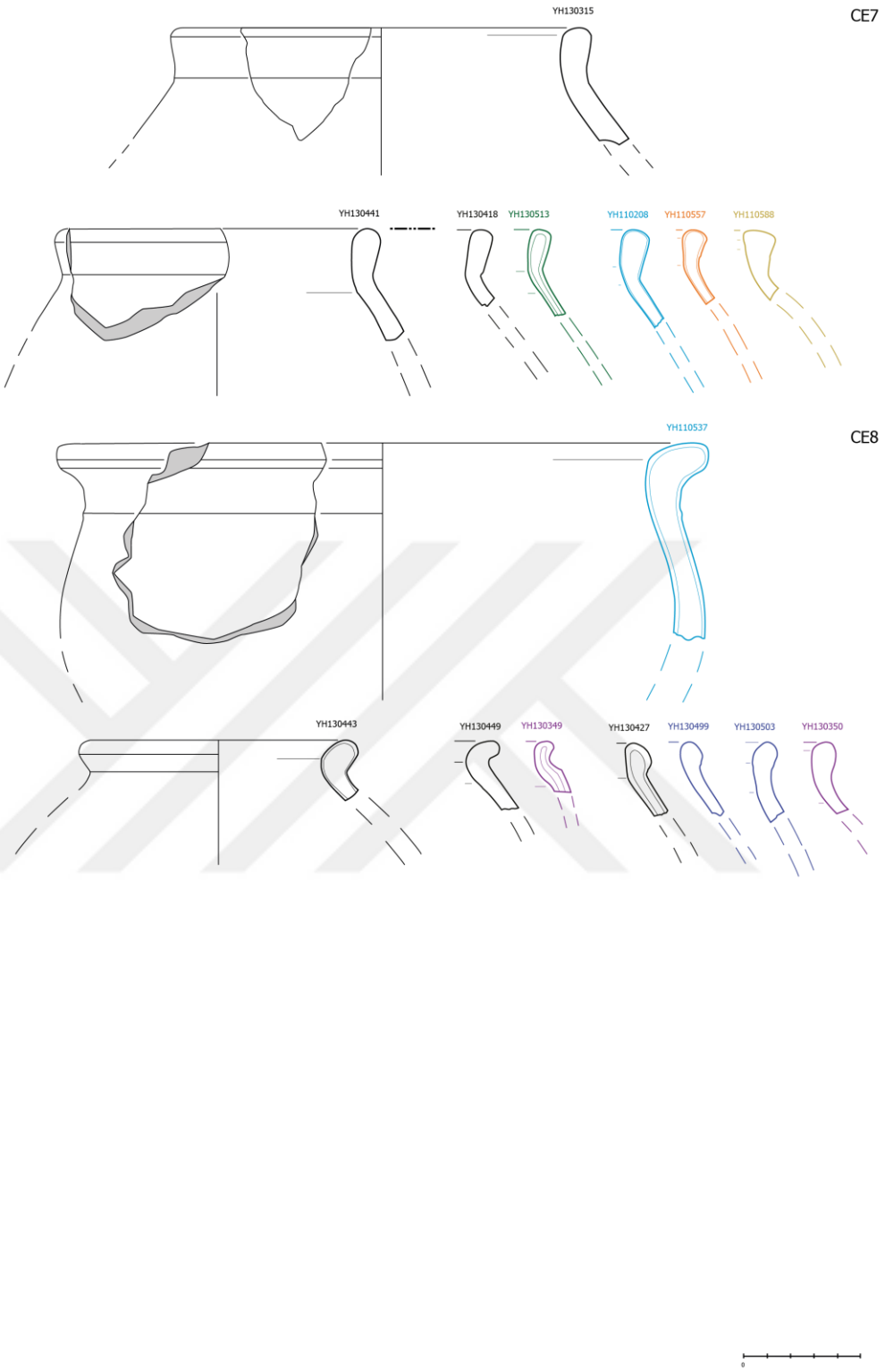


Figure 120. CE7-8 cooking pots

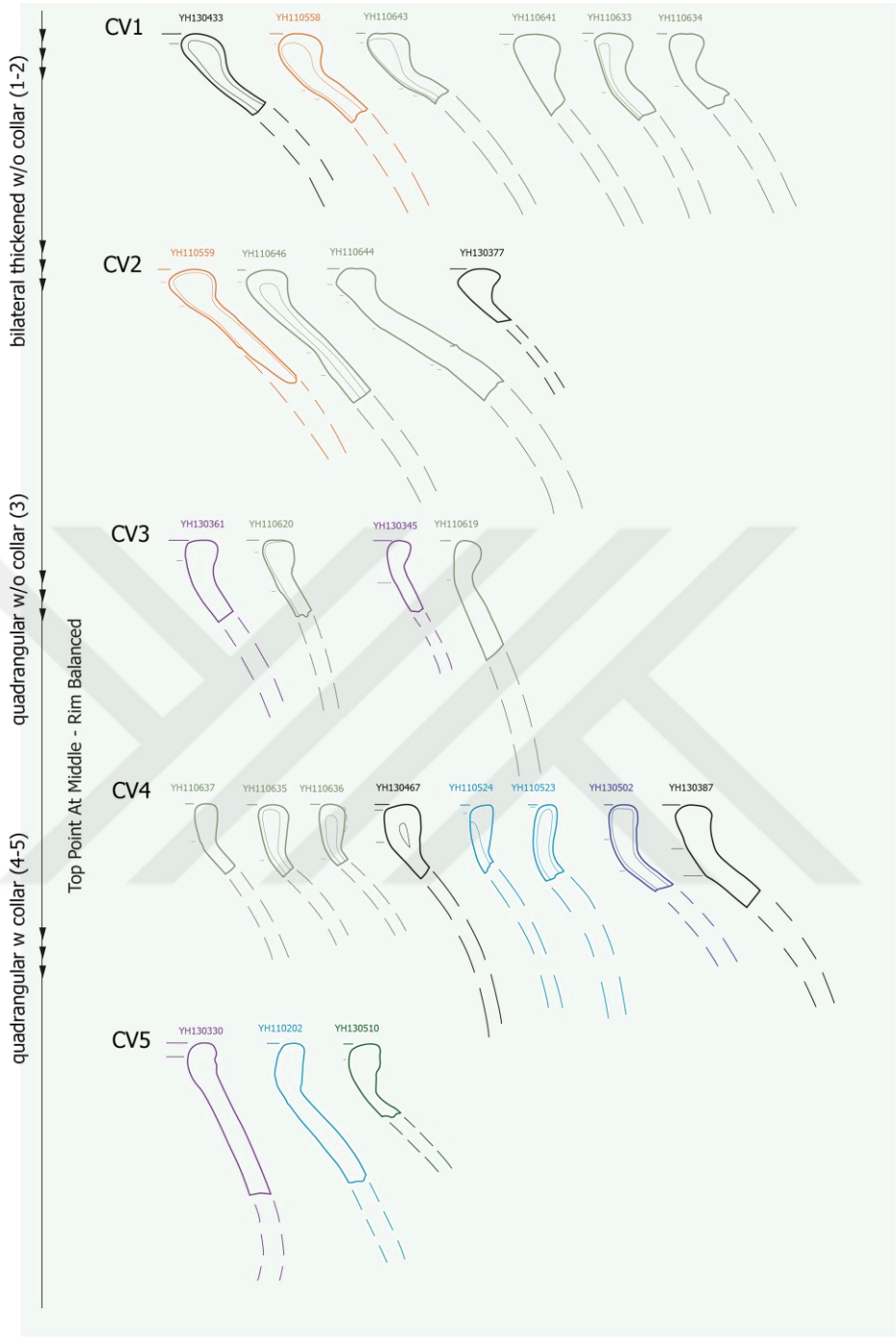


Figure 121. Summary of CV cooking pots

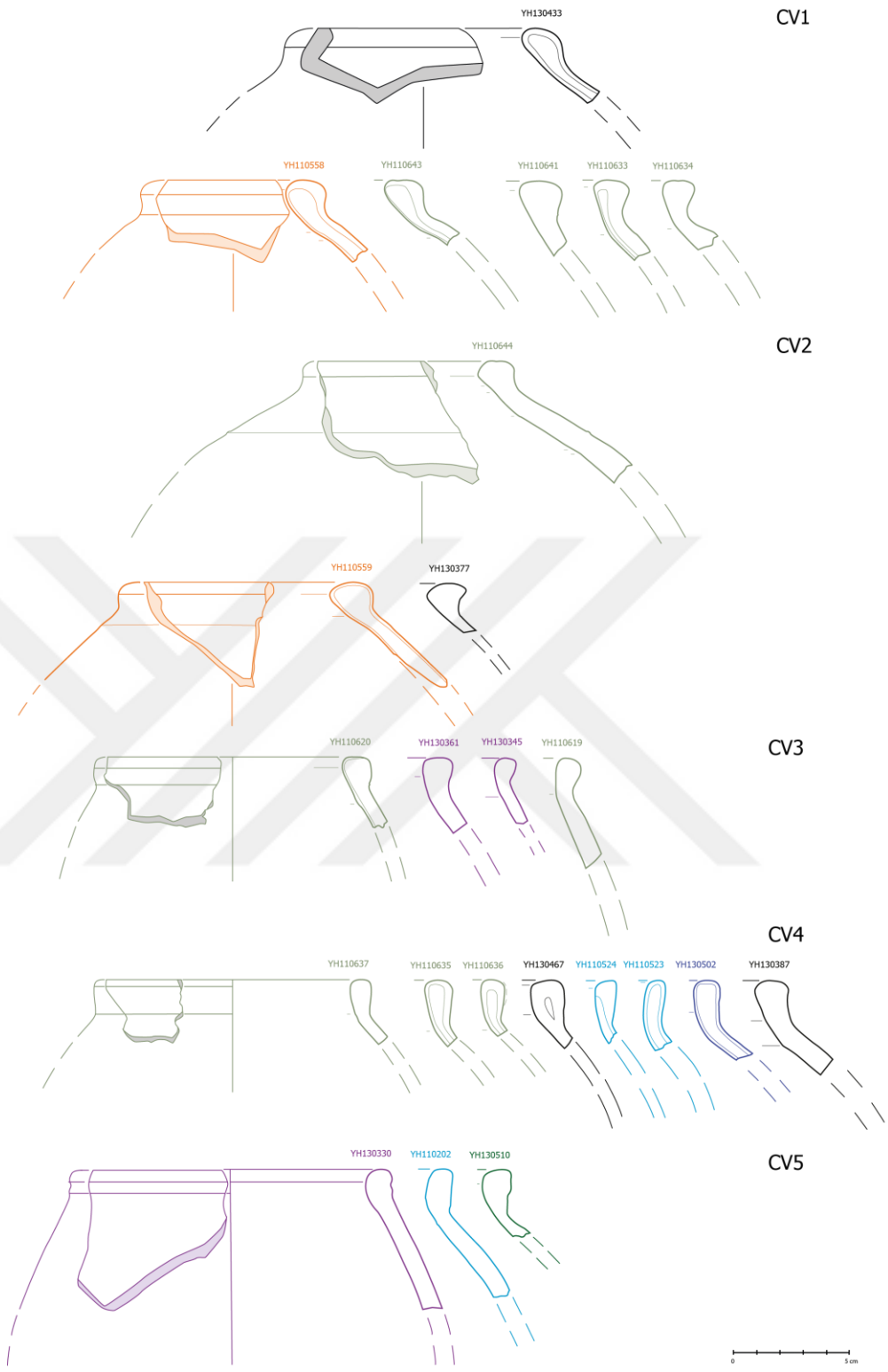


Figure 122. CV1-CV5 cooking pots

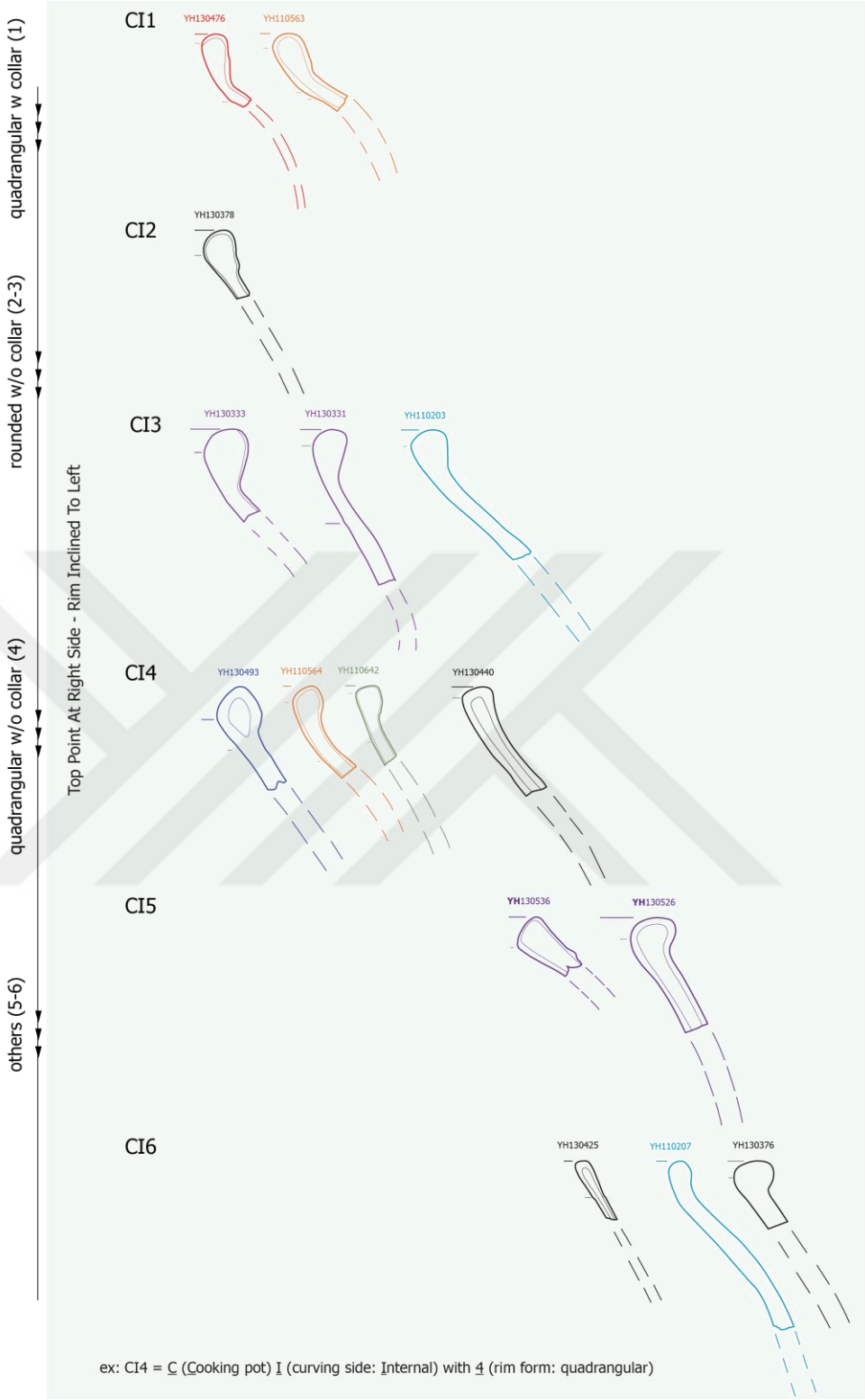


Figure 123. Summary of CI cooking pots

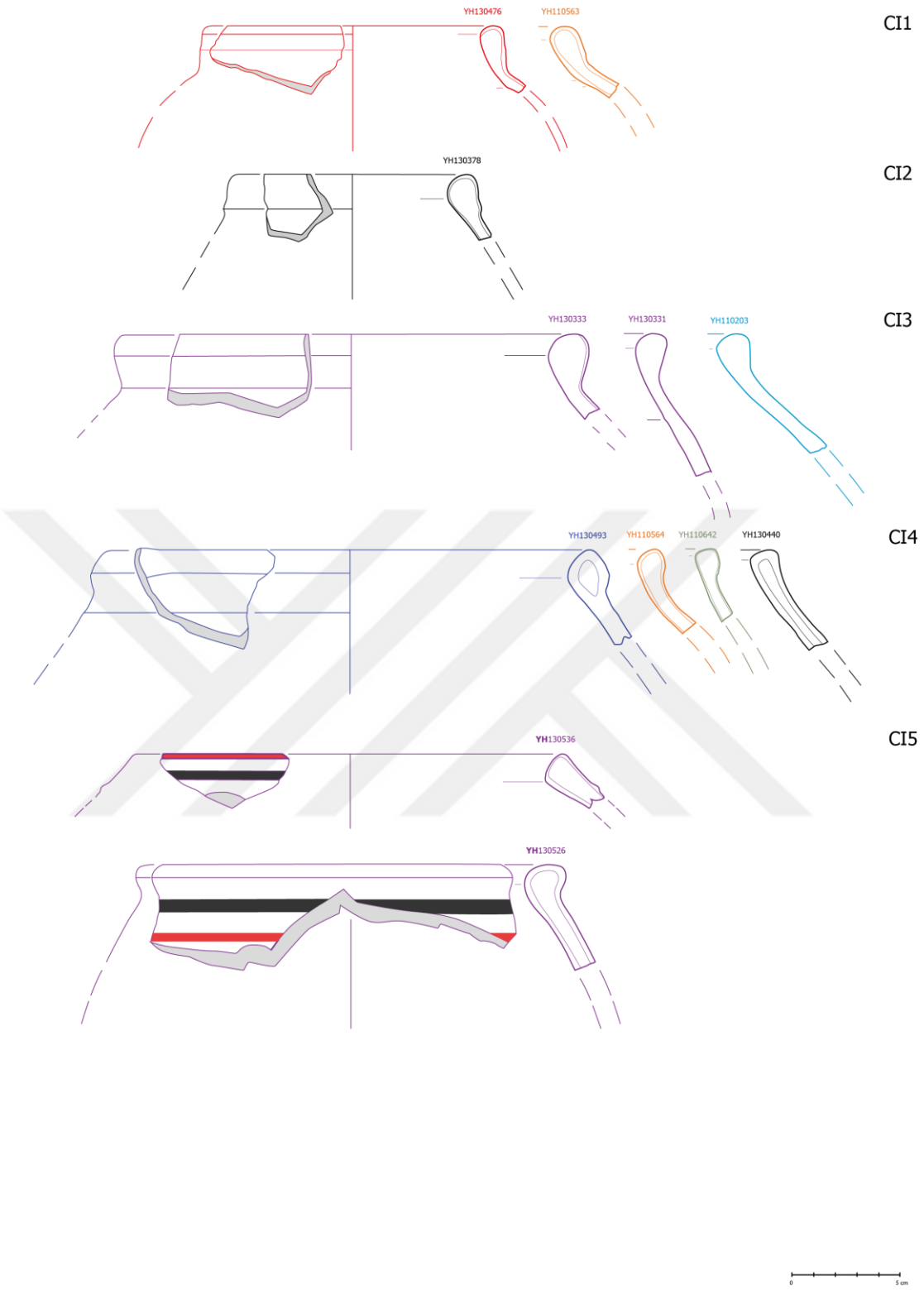


Figure 124. CI1-CI5 cooking pots

| YH-No | Area | Main Grid | Sub-Grid | PL | Deposit | Phase | Form-Main | Form Group | Main Type | Type | Diameter |
|---|---|---|---|---|---|---|---|---|---|---|---|
| 110197 | 1 | E 8/ | d9 | 34 | P41 | I-9 | Cooking pot w collar | CE-4 | T1 | C1 | 16-7% |
| 110202 | 1 | E 8/ | d9 | 34 | P41 | I-9 | Cooking pot w collar | CV-5 | T1 | C1 | 14-13% |
| 110203 | 1 | E 8/ | d9 | 34 | P41 | I-9 | Cooking pot w collar | CI-3 | T3 | C3 | 14-15% |
| 110207 | 1 | E 8/ | d9 | 34 | P41 | I-9 | Cooking pot w/o collar | CI-6 | T1 | C1 | 16-8% |
| 110208 | 1 | E 8/ | d9 | 34 | P41 | I-9 | Cooking pot w collar | CE-7 | T3 | C3 | 14-14% |
| 110218 | 1 | E 8/ | d9 | 34 | P41 | I-9 | Cooking pot w collar | CE-5 | T1 | C1 | 16-15% |
| 110523 | 1 | E 8/ | d9 | 34 | P41 | I-9 | Cooking pot w collar | CV-4 | T3 | C3 | 10-16% |
| 110524 | 1 | E 8/ | d9 | 34 | P41 | I-9 | Cooking pot w collar | CV-4 | burned | burned | 12-9% |
| 110536 | 1 | E 8/ | d9 | 36 | R33 | I-11 | Cooking pot w collar | CE-4 | T1 | C1 | 12-12% |
| 110537 | 1 | E 8/ | d9 | 36 | R33 | I-11 | Cooking pot w collar | CE-8 | T1 | C1 | 28-6% |
| 110556 | 1 | E 8/ | f10 | 60 | P34 | I-9 | Cooking pot w collar | CE-5 | T1 | C1 | 12-12% |
| 110557 | 1 | E 8/ | f10 | 60 | P34 | I-9 | Cooking pot w collar | CE-7 | T2 | C2 | 12-21% |
| 110558 | 1 | E 8/ | f10 | 60 | P34 | I-9 | Cooking pot w/o collar | CV-1 | T1 | C1 | 8-18% |
| 110559 | 1 | E 8/ | f10 | 60 | P34 | I-9 | Cooking pot w/o collar | CV-2 | T3 | C3 | In 8-18% |
| 110563 | 1 | E 8/ | f10 | 60 | P34 | I-9 | Cooking pot w collar | CI-1 | T3 | C3 | 12-15% |
| 110564 | 1 | E 8/ | f10 | 60 | P34 | I-9 | Cooking pot w/o collar | CI-4 | T1 | C1 | 12-12% |
| 110588 | 1 | E 8/ | f10 | 61 | P34 | I-9 | Cooking pot w collar | CE-7 | T1 | C1 | 16-21% |
| 110619 | 1 | E 8/ | f10 | 62 | P34 | I-9 | Cooking pot w collar | CV-3 | T1 | C1 | 14-11% |
| 110620 | 1 | E 8/ | f10 | 62 | P34 | I-9 | Cooking pot w/o collar | CV-3 | T1 | C1 | 12-16% |
| 110633 | 1 | E 8/ | f10 | 62 | P34 | I-9 | Cooking pot w/o collar | CV-1 | T1 | C1 | 12-12% |
| 110634 | 1 | E 8/ | f10 | 62 | P34 | I-9 | Cooking pot w/o collar | CV-1 | T2 | C2 | 10-9% |
| 110635 | 1 | E 8/ | f10 | 62 | P34 | I-9 | Cooking pot w collar | CV-4 | T1 | C1 | 14-8% |
| 110636 | 1 | E 8/ | f10 | 62 | P34 | I-9 | Cooking pot w collar | CV-4 | T1 | C1 | 10-16% |
| 110637 | 1 | E 8/ | f10 | 62 | P34 | I-9 | Cooking pot w collar | CV-4 | T1 | C1 | 12-9% |
| 110641 | 1 | E 8/ | f10 | 62 | P34 | I-9 | Cooking pot w/o collar | CV-1 | T1 | C1 | 14-11% |
| 110642 | 1 | E 8/ | f10 | 62 | P34 | I-9 | Cooking pot w/o collar | CI-4 | T1 | C1 | 14-11% |
| 110643 | 1 | E 8/ | f10 | 62 | P34 | I-9 | Cooking pot w/o collar | CV-1 | T1 | C1 | 12-17% |
| 110644 | 1 | E 8/ | f10 | 62 | P34 | I-9 | Cooking pot w/o collar | CV-2 | T1 | C1 | 8-20% |
| 110645 | 1 | E 8/ | f10 | 62 | P34 | I-9 | Cooking pot w collar | CE-7 | T1 | C1 | 22-10% |
| 110646 | 1 | E 8/ | f10 | 62 | P34 | I-9 | Cooking pot w/o collar | CV-2 | T3 | C3 | 14-15% |
| 130315 | 1 | E 8/ | d8 | 37 | R65 | I-10 | Cooking pot w collar | CE-7 | T2 | C2 | 18-10% |
| 130318 | 1 | E 8/ | d8 | 37 | R65 | I-10 | Cooking pot w collar | CE-6 | T1 | C1 | 24-20% |
| 130330 | 1 | E 8/ | d8 | 28 | P87 | I-9/I-1 | Cooking pot w collar | CV-5 | T5 | C5 | 14-13% |
| 130331 | 1 | E 8/ | d8 | 28 | P87 | I-9/I-1 | Cooking pot w collar | CI-3 | T2 | C2 | 14-25% |
| 130332 | 1 | E 8/ | d8 | 28 | P87 | I-9/I-1 | Cooking pot w collar | CE-4 | T3 | C3 | 20-6% |
| 130333 | 1 | E 8/ | d8 | 28 | P87 | I-9/I-1 | Cooking pot w collar | CI-3 | T1 | C1 | 22-9% |
| 130345 | 1 | E 8/ | d8 | 28 | P87 | I-9/I-1 | Cooking pot w collar | CV-3 | T1 | C1 | 10-19% |
| 130346 | 1 | E 8/ | d8 | 28 | P87 | I-9/I-1 | Cooking pot w collar | CE-5 | T1 | C1 | 16-10% |
| 130349 | 1 | E 8/ | d8 | 28 | P87 | I-9/I-1 | Cooking pot w collar | CE-8 | T5 | C5 | 14-6% |
| 130350 | 1 | E 8/ | d8 | 28 | P87 | I-9/I-1 | Cooking pot w/o collar | CE-8 | T1 | C1 | 14-11% |
| 130359 | 1 | E 8/ | d8 | 28 | P87 | I-9/I-1 | Cooking pot w collar | CE-3 | T1 | C1 | 16-9% |
| 130360 | 1 | E 8/ | d8 | 28 | P87 | I-9/I-1 | Cooking pot w collar | CE-3 | T1 | C1 | 16-25% |
| 130361 | 1 | E 8/ | d8 | 28 | P87 | I-9/I-1 | Cooking pot w collar | CV-3 | T1 | C1 | 12-5% |
| 130366 | 1 | E 8/ | d8 | 34 | R59 | I-11 | Cooking pot w collar | CE-3 | T1 | C1 | 14-16% |
| 130367 | 1 | E 8/ | d8 | 34 | R59 | I-11 | Cooking pot w collar | CE-4 | T1 | C1 | 14-15% |
| 130376 | 1 | E 8/ | d8 | 34 | R59 | I-11 | Cooking pot w/o collar | CI-6 | T1 | C1 | 16-5% |
| 130377 | 1 | E 8/ | d8 | 34 | R59 | I-11 | Cooking pot w collar | CV-2 | T1 | C1 | 14-13% |
| 130378 | 1 | E 8/ | d8 | 34 | R59 | I-11 | Cooking pot w/o collar | CI-2 | T3 | C3 | 12-6% |
| 130386 | 1 | E 8/ | d8 | 34 | R59 | I-11 | Cooking pot w collar | CE-2 | T1 | C1 | 18-10% |
| 130387 | 1 | E 8/ | d8 | 34 | R59 | I-11 | Cooking pot w/o collar | CV-4 | T1 | C1 | 12-18% |
| 130401 | 1 | E 8/ | d8 | 34 | R59 | I-11 | Cooking pot w collar | CE-6 | T2 | C2 | 26-19% |
| 130413 | 1 | E 8/ | d8 | 34 | R59 | I-11 | Cooking pot w collar | CE-1 | T1 | C1 | 18-8% |
| 130418 | 1 | E 8/ | d8 | 34 | R59 | I-11 | Cooking pot w collar | CE-7 | T1 | C1 | 16-6% |
| 130425 | 1 | E 8/ | d8 | 34 | R59 | I-11 | Cooking pot w/o collar | CI-6 | T1 | C1 | 12-8% |
| 130427 | 1 | E 8/ | d8 | 34 | R59 | I-11 | Cooking pot w collar | CE-8 | T1 | C1 | 14-13% |
| 130432 | 1 | E 8/ | d8 | 34 | R59 | I-11 | Cooking pot w collar | CE-2 | T1 | C1 | 16-8% |
| 130433 | 1 | E 8/ | d8 | 34 | R59 | I-11 | Cooking pot w/o collar | CV-1 | T2 | C2 | 12-25% |
| 130440 | 1 | E 8/ | d8 | 34 | R59 | I-11 | Cooking pot w/o collar | CI-4 | T1 | C1 | 10-25% |
| 130441 | 1 | E 8/ | d8 | 34 | R59 | I-11 | Cooking pot w collar | CE-7 | T1 | C1 | 14-17% |
| 130442 | 1 | E 8/ | d8 | 34 | R59 | I-11 | Cooking pot w collar | CE-5 | T1 | C1 | 20-6% |
| 130443 | 1 | E 8/ | d8 | 34 | R59 | I-11 | Cooking pot w collar | CE-8 | T3 | C3 | 12-15% |
| 130448 | 1 | E 8/ | d8 | 34 | R59 | I-11 | Cooking pot w collar | CE-7 | T1 | C1 | 18-20% |
| 130449 | 1 | E 8/ | d8 | 34 | R59 | I-11 | Cooking pot w collar | CE-8 | T1 | C1 | 16-10% |
| 130457 | 1 | E 8/ | d8 | 34 | R59 | I-11 | Cooking pot w collar | CE-4 | T2 | C2 | 14-25% |
| 130467 | 1 | E 8/ | d8 | 34 | R59 | I-11 | Cooking pot w collar | CV-4 | T1 | C1 | 20-6% |
| 130475 | 1 | E 8/ | d8 | 47 | R59 | I-11 | Cooking pot w collar | CE-2 | T1 | C1 | 16-4% |
| 130476 | 1 | E 8/ | d8 | 47 | R59 | I-11 | Cooking pot w collar | CI-1 | T1 | C1 | 14-14% |
| 130478 | 1 | E 8/ | d8 | 47 | R59 | I-11 | Cooking pot w collar | CE-6 | T1 | C1 | 18-10% |
| 130487 | 1 | E 8/ | d8 | 48 | R59 | I-11 | Cooking pot w collar | CE-5 | T2 | C2 | 22-6% |
| 130493 | 1 | E 8/ | d8 | 48 | R59 | I-11 | Cooking pot w/o collar | CI-4 | T1 | C1 | 24-7% |
| 130499 | 1 | E 8/ | d8 | 48 | R59 | I-11 | Cooking pot w/o collar | CE-8 | T1 | C1 | 10-16% |
| 130502 | 1 | E 8/ | d8 | 48 | R59 | I-11 | Cooking pot w collar | CV-4 | T2 | C2 | 14-11% |
| 130503 | 1 | E 8/ | d8 | 48 | R59 | I-11 | Cooking pot w/o collar | CE-8 | T1 | C1 | 10-5% |
| 130510 | 1 | E 8/ | d8 | 49 | R59 | I-11 | Cooking pot w collar | CV-5 | burned | burned | 14-15% |
| 130513 | 1 | E 8/ | d8 | 49 | R59 | I-11 | Cooking pot w collar | CE-7 | T1 | C1 | 12-21% |
| 130517 | 1 | E 8/ | d8 | 48 | R59 | I-11 | Cooking pot w collar | CE-4 | T1 | C1 | 18-8% |
| 130526 | 1 | E 8/ | d8 | 28 | P87 | I-9/I-1 | Cooking pot w collar | CI-5 | T1 | C1 | 20-11% |
| 130536 | 1 | E 8/ | d8 | 28 | P87 | I-9/I-1 | Cooking pot w/o collar | CI-5 | T1 | C1 | 20-9% |
| 140231 | 1 | E 8/ | d8 | 63 | P78 | I-9/I-1 | Cooking pot w collar | CE-4 | T1 | C1 | 16-13% |

Figure 125. Descriptive Catalogue of CE, CV, CI cooking pots

| YH-No | Fabric | CoreColor-Inclusion(Density+Size) | Surface/Out | Surface/In |
|---|---|---|---|---|
| 110197 | G-G | G-C (F-C, H-M&F), L(H-F), G(H-M&F), M | Smoothed | Smoothed |
| 110202 | G-L | G-C(F-M, H-F), L(F-M, H-F), G(H-F), M | Smoothed | Smoothed |
| 110203 | O-L | O-C (F-F), L(H-F) G(M-F), M | Smoothed | Smoothed |
| 110207 | O-C+L | O-C (F-C, H-M, H-F), L(H-M, H-F), G(H-M, H-F), M | Smoothed | Smoothed |
| 110208 | G-G | G-C (H-F), L(H-F), G(H-F), M | Smoothed | Smoothed |
| 110218 | B-G | B-C (F-F), G(H-M&F), M | Smoothed | Smoothed |
| 110523 | G-L | G-C (H-F), L(H-F, F-C), G(F-C,H-M&F), M | Smoothed | Smoothed |
| 110524 | B-C | B-C(H-F), L(H-F, F-M), G(F-M), M | Smoothed | Smoothed |
| 110536 | O-G | O-C (F-F), L(F-F) G(F-M&F), M | Smoothed | Smoothed |
| 110537 | G-C+L | G-C (F-C, M-M), L(F-C,H-M&F),G(F-C,H-M&F), M | Smoothed | Smoothed |
| 110556 | B-G | B-C (F-F), G(F-C, H-M&F), M | Smoothed | Smoothed |
| 110557 | G-G+L | G-C (F-F), L(F-C, H-M&F), G(F-C, H-M&F), M | Smoothed | Smoothed |
| 110558 | G-G+L | G-C (F-C, H-F), L(H-M&F), G(H-M&F), M | Smoothed | Smoothed |
| 110559 | G-G+L | G-C (M-F), L(H-M&F), G(H-M&F), M | Smoothed | Smoothed |
| 110563 | O-L | O-C (F-F), L(F-M, H-F) G(M-F), M | Smoothed | Smoothed |
| 110564 | O-G | O-C (F-C, H-F), L(H-F), G(F-C, H-M&F), M | Smoothed | Smoothed |
| 110588 | O-G | O-C (M-M&F), L(H-M&F) G(F-C, H-M&F), M | Smoothed | Smoothed |
| 110619 | G-G+L | G-C (M-F), L(F-M, H-F), G(F-C, H-M&F), M | Smoothed | Smoothed |
| 110620 | G-G+L | G-C (M-F), L(M-M&F), G(F-C, H-M&F), M | Smoothed | Smoothed |
| 110633 | G-G | G-C (F-C, H-M&F), L(H-M&F), G(H-M&F), M | Smoothed | Smoothed |
| 110634 | O-G | O-C (F-F), L(F-C, H-M&F), G(F-C, H-M&F), M | Smoothed | Smoothed |
| 110635 | G-G+L | G-C (F-F), L(H-M&F), G(H-M&F), M | Smoothed | Smoothed |
| 110636 | G-G | G-C (F-C, H-F), L(H-F), G(F-C, F-M, H-F), M | Smoothed | Smoothed |
| 110637 | G-G | G-C (F-C, H-F), L(H-F), G(F-M, H-F), M | Smoothed | Smoothed |
| 110641 | G-G+L | G-C (F-C, H-F), L(H-M&F), G(H-M&F), M | Smoothed | Smoothed |
| 110642 | G-G | G-C (F-F), L(F-M, M-F), G(M-F), M | Smoothed | Smoothed |
| 110643 | G-G+L | G-C (F-C, H-F), L(H-M&F), G(H-M&F), M | Smoothed | Smoothed |
| 110644 | G-G | G-C (F-C, H-F), L(H-M&F), G(F-C, H-M&F), M | Smoothed | Smoothed |
| 110645 | O-G | O-C (M-M&F), L(H-M&F) G(F-C, H-M&F), M | Smoothed | Smoothed |
| 110646 | O-G | O-C(M-M&F), L(F-M, H-F) G( F-M, H-F), M | Smoothed | Smoothed |
| 130315 | O-L | O-C (F-F), L(F-C, H-M, H-F), G(F-M, H-F), M | Smoothed | Smoothed |
| 130318 | G-G | G-C (M-M), L(F-M, H-F), G(M-C, H-M&F), M | Smoothed | Smoothed |
| 130330 | G-G | G-C(M-M), L(F-M, H-F), G(M-C, F-M, H-F), M | Smoothed | Smoothed |
| 130331 | O-L | O-C (F-F), L(F-C, H-M, H-F), G(H-M, H-F), M | Smoothed | Smoothed |
| 130332 | B-G | B-C (H-F), G(F-M, H-F), M | Smoothed | Smoothed |
| 130333 | G-L | G-C (F-M, H-F), L(F-M, H-F), G(F-M, H-F), M | Smoothed | Smoothed |
| 130345 | G-G | G-C (F-F), L(F-F), G(H-M&F), M | Smoothed | Smoothed |
| 130346 | O-G | O-C (F-C&F), G(H-M&F), M | Smoothed | Smoothed |
| 130349 | G-G | G-C (H-F), G(H-M&F), M | Polished | Polished |
| 130350 | O-G | O-C (F-C&F), G(H-M&F), M | Smoothed | Smoothed |
| 130359 | G-G | G-C (H-F), L(H-F), G(H-M&F), M | Smoothed | Smoothed |
| 130360 | B-C | B-C (H-M&F), G(F-M, H-F), M | Smoothed | Smoothed |
| 130361 | G-G | G-C (H-F), L(F-F), G(H-M&F), M | Smoothed | Smoothed |
| 130366 | O-G | O-C (F-C, H-M&F), L&G(H-M&F), M | Smoothed | Smoothed |
| 130367 | O-G | O-C (F-C&F), G(H-M&F), M | Smoothed | Smoothed |
| 130376 | O-G | O-C (F-C&F), G(H-M&F), M | Smoothed | Smoothed |
| 130377 | O-G | O-C(F-C&F), G(F-M, H-F), M | Smoothed | Smoothed |
| 130378 | O-L | O-C (F-F), L(H-F) G(M-F), M | Smoothed | Smoothed |
| 130386 | B-G | B-C (H-F), G(H-M, H-F), M | Smoothed | Smoothed |
| 130387 | O-L | O-C (M-F), L(H-F), G(F-F), M | Smoothed | Smoothed |
| 130401 | G-G+L | G-C (F-C, H-F), L(H-M&F), G(H-M&F), M | Smoothed | Smoothed |
| 130413 | B-G | B-C (H-F), G(H-M, H-F), M | Smoothed | Smoothed |
| 130418 | O-G | O-C (F-F), L(F-F), G(F-M, H-F), M | Smoothed | Smoothed |
| 130425 | G-G | G-C (F-F), L(F-F), G(F-F), M | Smoothed | Smoothed |
| 130427 | B-G | B-C (H-F), L(H-F), G(F-M&F), M | Smoothed | Smoothed |
| 130432 | G-G | G-C (H-F), L(H-F), G(H-M&F), M | Smoothed | Smoothed |
| 130433 | O-L | O-C (F-F), L(H-M, H-F), G(F-M&F), M | Smoothed | Smoothed |
| 130440 | G-L | G-C (F-C, H-F), L(H-F), G(F-M, H-F), M | Smoothed | Smoothed |
| 130441 | G-G | G-C (H-F), L(H-F), G(H-M&F), M | Smoothed | Smoothed |
| 130442 | G-G | G-C (F-F), L(F-M), G(H-M&F), M | Smoothed | Smoothed |
| 130443 | O-L | O-C (F-F), L(H-M, H-F), G(H-F), M | Smoothed | Smoothed |
| 130448 | O-G | O-C (M-M&F), L(H-M&F) G(F-C, H-M&F), M | Smoothed | Smoothed |
| 130449 | B-G | B-C (F-F), G(F-C, H-M&F), M | Smoothed | Smoothed |
| 130457 | G-C+L | G-C (H-C, H-M&F), L(H-C, H-M&F), G(H-M&F), M | Smoothed | Smoothed |
| 130467 | G-G | G-C(F-F), L(F-M), G(F-M, H-F), M | Smoothed | Smoothed |
| 130475 | G-G | G-C (F-F), L(H-F), G(F-C, H-M&F), M | Smoothed | Smoothed |
| 130476 | O-G | O-C (M-F), L(F-M, H-F), G(F-M, H-F), M | Smoothed | Smoothed |
| 130478 | G-G | G-C (M-M), L(F-M), G(M-C, H-M&F), M | Smoothed | Smoothed |
| 130487 | O-G | O-C (F-C, H-M&F), L&G(H-M&F), M | Smoothed | Smoothed |
| 130493 | O-G+L | O-C (H-M, H-F), L(H-M, H-F), G(H-M, H-F), M | Smoothed | Smoothed |
| 130499 | O-G | O-C (H-M&F), G(H-M&F), M | Smoothed | Smoothed |
| 130502 | G-C+L | G-C (H-C, H-M&F), L(H-F), G(M-F), M | Smoothed | Smoothed |
| 130503 | O-G | O-C (H-M&F), G(H-M&F), M | Smoothed | Smoothed |
| 130510 | G-C | G-C(H-M,H-F), L(H-F), G(H-F), M | Smoothed | Smoothed |
| 130513 | G-C+L | G-C (H-F), L(F-M, H-F), G(F-M, H-F), M | Smoothed | Smoothed |
| 130517 | G-G | G-C (H-F, F-M), L (H-F, F-M), G(M-M&F), M | Smoothed | Smoothed |
| 130526 | G-L | G-C (F-C, H-M&F), L(H-M&F), G(H-M&F), M | Smoothed | Smoothed |
| 130536 | G-C | G-C (H-M, H-F), L(F-M, H-F), G(F-M, H-F), M | Smoothed | Smoothed |
| 140231 | G-C | G-C (F-C, H-M&F), L(H-M&F), G(H-M&F), M | Smoothed | Smoothed |

Figure 126. Descriptive Catalogue of CE, CV, CI cooking pots

| Surface/Out | Surface/In | YH-No | Color/Out | Color/In | Color/Fabric-Core | Color / Paint | Decoration |
|---|---|---|---|---|---|---|---|
| Smoothed | Smoothed | 110197 | 2.5YR 5/2 | 5YR 6/2 | N 5/0 | | |
| Smoothed | Smoothed | 110202 | N1.5/0 | 5YR 6/4 | N 5/0 | | |
| Smoothed | Smoothed | 110203 | 2.5YR 8/2 | 7.5YR 7/2 | 2.5YR 6/4 | | |
| Smoothed | Smoothed | 110207 | 10R 5/4 | 10R 5/4 | 10R 5/4 | | |
| Smoothed | Smoothed | 110208 | 5YR 6/3 | 5YR 6/3 | N 3/0 | | |
| Smoothed | Smoothed | 110218 | 2.5Y 5/1 | N 3/0 | 2.5YR 3/6 | | |
| Smoothed | Smoothed | 110523 | 7.5YR 8/2 | 7.5YR 8/2 | 7.5YR 7/2-8/4 | | |
| Smoothed | Smoothed | 110524 | 7.5YR 2/1 | 7.5YR 2/1 | N 3/0 | | |
| Smoothed | Smoothed | 110536 | 5YR 6/4 | 7.5YR 6/3 | 7.5YR 6/3 | | |
| Smoothed | Smoothed | 110537 | 7.5YR 6/4- 4/1 | 5YR 7/4 | 5YR 6/6-N 3/0 | | |
| Smoothed | Smoothed | 110556 | 5YR 5/1-2/1 | 5YR 5/1-2/1 | 5YR 7/1 | | |
| Smoothed | Smoothed | 110557 | 5YR 7/3 | 5YR 6/2 | 5YR 4/1 | | |
| Smoothed | Smoothed | 110558 | 7.5YR 7/4 | 7.5YR 7/4 | 10YR 6/4-2.5Y 5/1 | | |
| Smoothed | Smoothed | 110559 | 2.5Y 8/3-10YR 8/3 | 2.5YR 7/4 | 2.5YR 5/1 | | |
| Smoothed | Smoothed | 110563 | 10YR 7/3 | 10YR 7/3 | 2.5YR 5/1-5YR 6/6 | | |
| Smoothed | Smoothed | 110564 | 5YR 6/6 | 2.5YR 6/6 | 10YR 7/4-5YR 7/6 | | |
| Smoothed | Smoothed | 110588 | 5YR 5/3 | 5YR 5/1 | 5YR 7/3 | | |
| Smoothed | Smoothed | 110619 | 10YR 7/3-7/4 | 10YR 7/3-7/4 | 7.5 YR 7/6-6/3 | | |
| Smoothed | Smoothed | 110620 | 10YR 7/3-3/1 | 10YR 7/3 | 10YR 7/6 | | |
| Smoothed | Smoothed | 110633 | 7.5YR 8/3-4/1 | 7.5YR 7/2 | 7.5YR 7/3-N 6/0 | | |
| Smoothed | Smoothed | 110634 | 7.5YR 7/4 | 7.5YR 7/4 | 10YR 6/4-2.5Y 5/1 | | |
| Smoothed | Smoothed | 110635 | 7.5YR 7/4 | 7.5YR 7/4 | 5YR 6/6-10YR 5/2 | | |
| Smoothed | Smoothed | 110636 | 10YR 7/4-5/1 | 10YR 7/4-5/1 | 10YR 4/1 | | |
| Smoothed | Smoothed | 110637 | 2.5Y 8/3-5/1 | 2.5Y 8/3-7/1 | 7.5YR 7/6-7/2 | | |
| Smoothed | Smoothed | 110641 | 5YR 7/4 | 2.5YR 5/1 | 10YR 6/4-2.5Y 5/1 | | |
| Smoothed | Smoothed | 110642 | 10R 6/2 | 10R 6/2 | 10R 6/4-N 3/0 | | |
| Smoothed | Smoothed | 110643 | 7.5YR 7/4 | 7.5YR 7/4 | 10YR 6/4-2.5Y 5/1 | | |
| Smoothed | Smoothed | 110644 | 2.5YR 7/6-4/1 | 7.5YR 7/3-2/1 | 2.5Y 4/1-7.5 YR 6/6 | | |
| Smoothed | Smoothed | 110645 | 5YR 7/4 | 5YR 6/3 | 5YR 6/6 | | |
| Smoothed | Smoothed | 110646 | 10YR 7/3 | 7.5YR 6/6 | 2.5Y 7/4 | | |
| Smoothed | Smoothed | 130315 | 2.5YR 7/2 | 2.5YR 6/4 | 2.5YR 7/4 | | |
| Smoothed | Smoothed | 130318 | 2.5YR 6/3 | 2.5YR 7/4 | 2.5YR 7/4-N 4/0 | | |
| Smoothed | Smoothed | 130330 | 5Y 5/1 | 5Y 5/1 | 7.5YR 5/2 | | |
| Smoothed | Smoothed | 130331 | 2.5YR 7/3 | 2.5YR 7/2 | 10R 6/4 | | |
| Smoothed | Smoothed | 130332 | N 3/0 | N 3/0 | N 3/0 | | |
| Smoothed | Smoothed | 130333 | 5Y 8/3 | N 5/0 | 5YR 6/6-N 5/0 | | |
| Smoothed | Smoothed | 130345 | 5YR 7/3 | 5YR 7/2 | 5YR 7/3-N 5/0 | | |
| Smoothed | Smoothed | 130346 | 5YR 6/3 | 5YR 6/3 | 10R 6/2-6/4 | | |
| Polished | Polished | 130349 | 5YR 4/1 | 5YR 4/1 | 5YR 7/2-N 6/0 | | |
| Smoothed | Smoothed | 130350 | 2.5YR 4/1 | 2.5YR 6/4 | 2.5YR 6/4 | | |
| Smoothed | Smoothed | 130359 | 5YR 5/2 | 5YR 6/4 | 5YR 6/4 | | |
| Smoothed | Smoothed | 130360 | 7.5YR 6/3 | 7.5YR 6/2 | 7.5YR 5/1-N 3/0 | | |
| Smoothed | Smoothed | 130361 | 7.5YR 6/3 | 7.5YR 6/3 | 5YR 5/4 | | |
| Smoothed | Smoothed | 130366 | 5YR 7/4 | 5YR 5/3 | 5YR 5/3 | | |
| Smoothed | Smoothed | 130367 | 2.5YR 6/6 | 2.5YR 5/3 | 2.5YR 6/4 | | |
| Smoothed | Smoothed | 130376 | 5YR 6/4 | 5YR 7/1 | 5YR 6/4-6/1 | | |
| Smoothed | Smoothed | 130377 | 2.5YR 6/6 | 2.5YR 6/4 | 2.5YR 6/4 | | |
| Smoothed | Smoothed | 130378 | 10YR 8/3 | 10YR 7/2 | 10YR 5/1-6/3 | | |
| Smoothed | Smoothed | 130386 | 5YR 6/4 | 5YR 6/4 | 5YR 7/4-4/1 | | |
| Smoothed | Smoothed | 130387 | 2.5YR 6/6-7/2 | 2.5YR 6/4 | 2.5YR 6/6 | | |
| Smoothed | Smoothed | 130401 | 10R 5/6 | 10R 6/6 | 10R 5/6-N 7/0 | | |
| Smoothed | Smoothed | 130413 | 5YR 7/1 | 5YR 7/1 | 5YR 7/1-7/2 | | |
| Smoothed | Smoothed | 130418 | 2.5YR 7/4 | 5YR 7/3 | 5YR 7/3 | | |
| Smoothed | Smoothed | 130425 | 5YR 8/3 | 5YR 8/3 | 5YR 8/2-N 5/0 | | |
| Smoothed | Smoothed | 130427 | 2.5Y 3/1 | 2.5YR 2/1 | 2.5Y 3/1 | | |
| Smoothed | Smoothed | 130432 | 5YR 7/3-3/1 | 5YR 7/3 | 10YR 7/1-N 5/0 | | |
| Smoothed | Smoothed | 130433 | 2.5YR 7/4-10YR 8/2 | 2.5YR 7/4-10YR 8/2 | 2.5YR 6/6 | | |
| Smoothed | Smoothed | 130440 | 7.5YR 7/3 | 7.5YR 7/3 | 7.5YR 7/2-N 6/0 | | |
| Smoothed | Smoothed | 130441 | 7.5YR 6/3-4/2 | 7.5YR 7/2-3/0 | 7.5YR 7/2 | | |
| Smoothed | Smoothed | 130442 | 7.5YR 7/4-3/1 | 7.5YR 7/4 | 5YR 7/3-5Y 6/1 | | |
| Smoothed | Smoothed | 130443 | 10YR 8/2 | 2.5YR 7/6-8/2 | 2.5YR 7/6-8/2 | | |
| Smoothed | Smoothed | 130448 | 2.5YR 7/6-4/1 | 2.5YR 7/4-4/1 | 2.5YR 7/4-7.5YR 8/3 | | |
| Smoothed | Smoothed | 130449 | 10YR 5/1 | 10YR 2/1 | 10YR 3/1 | | |
| Smoothed | Smoothed | 130457 | 5YR 7/3 | 2.5YR 6/4 | 2.5YR 6/2-N 8/0 | | |
| Smoothed | Smoothed | 130467 | 7.5YR 3/3 | 7.5YR 5/3 | 5YR 6/4-N 6/0 | | |
| Smoothed | Smoothed | 130475 | 7.5YR 4/1 | 7.5YR 5/3 | 10YR 6/4-5/1 | | |
| Smoothed | Smoothed | 130476 | 2.5YR 7/4-4/1 | 2.5YR 5/4 | 2.5YR 6/6-7/1 | | |
| Smoothed | Smoothed | 130478 | 7.5YR 8/3-4/1 | 7.5YR 7/2 | 7.5YR 7/3-N 6/0 | | |
| Smoothed | Smoothed | 130487 | 5YR 5/3 | 5YR 6/4 | 5YR 6/4 | | |
| Smoothed | Smoothed | 130493 | 5YR 6/4-6/1 | 5YR 6/4 | 10YR 7/3-N 5/0 | | |
| Smoothed | Smoothed | 130499 | 2.5YR 6/4 | 2.5YR 6/4 | 2.5YR 7/6 | | |
| Smoothed | Smoothed | 130502 | 2.5YR 7/3 | 5YR 7/2-7/4 | 7.5YR 8/3-N 5/0 | | |
| Smoothed | Smoothed | 130503 | 5YR 5/2 | 5YR 5/3 | 2.5YR 6/4 | | |
| Smoothed | Smoothed | 130510 | 5YR 6/2 | 5YR 5/1 | 5YR 6/3 | | |
| Smoothed | Smoothed | 130513 | 5YR 7/4 | 2.5Y 8/3-8/2 | N 4/0 | | |
| Smoothed | Smoothed | 130517 | 2.5YR 6/6-2/1 | 2.5YR 6/6 | 5YR 7/4-5 Y 6/1 | | |
| Smoothed | Smoothed | 130526 | 5YR 8/4-5YR 7/2 | 5YR 8/4-5YR 7/4 | 7.5YR 7/4-N 5/0 | 5YR 3/1-10R 6/8 | LineHorz |
| Smoothed | Smoothed | 130536 | 5YR 6/4 | 2.5YR 6/6 | 7.5YR 7/6-N 5/0 | 10R 5/8-5YR 2/1 | LineHorz |
| Smoothed | Smoothed | 140231 | 5YR 6/3 | 5YR 3/1 | 7.5YR 7/3-6/1 | | |

Figure 127. Descriptive Catalogue of CE, CV, CI cooking pots

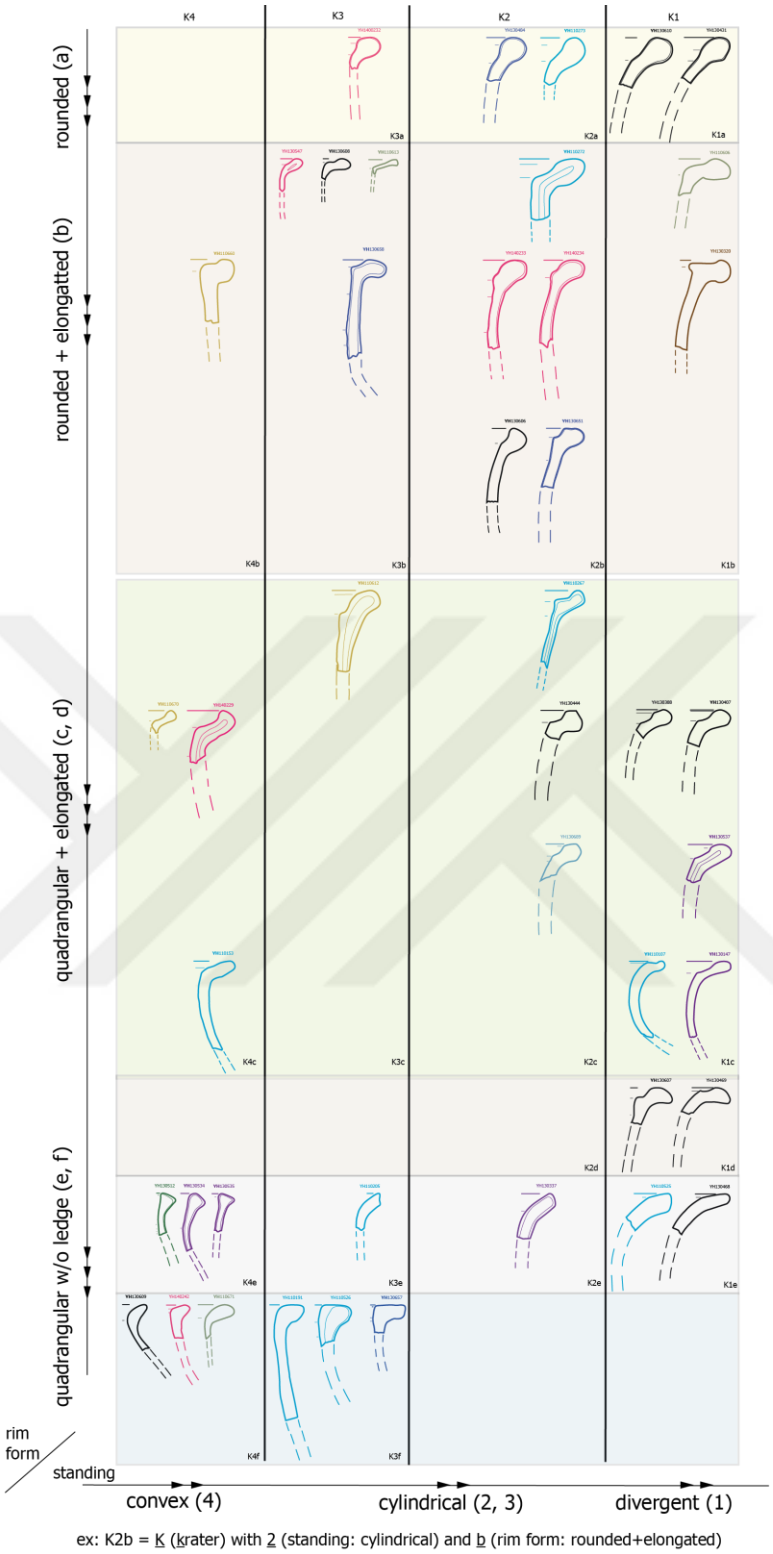


Figure 128. Summary of krater types K

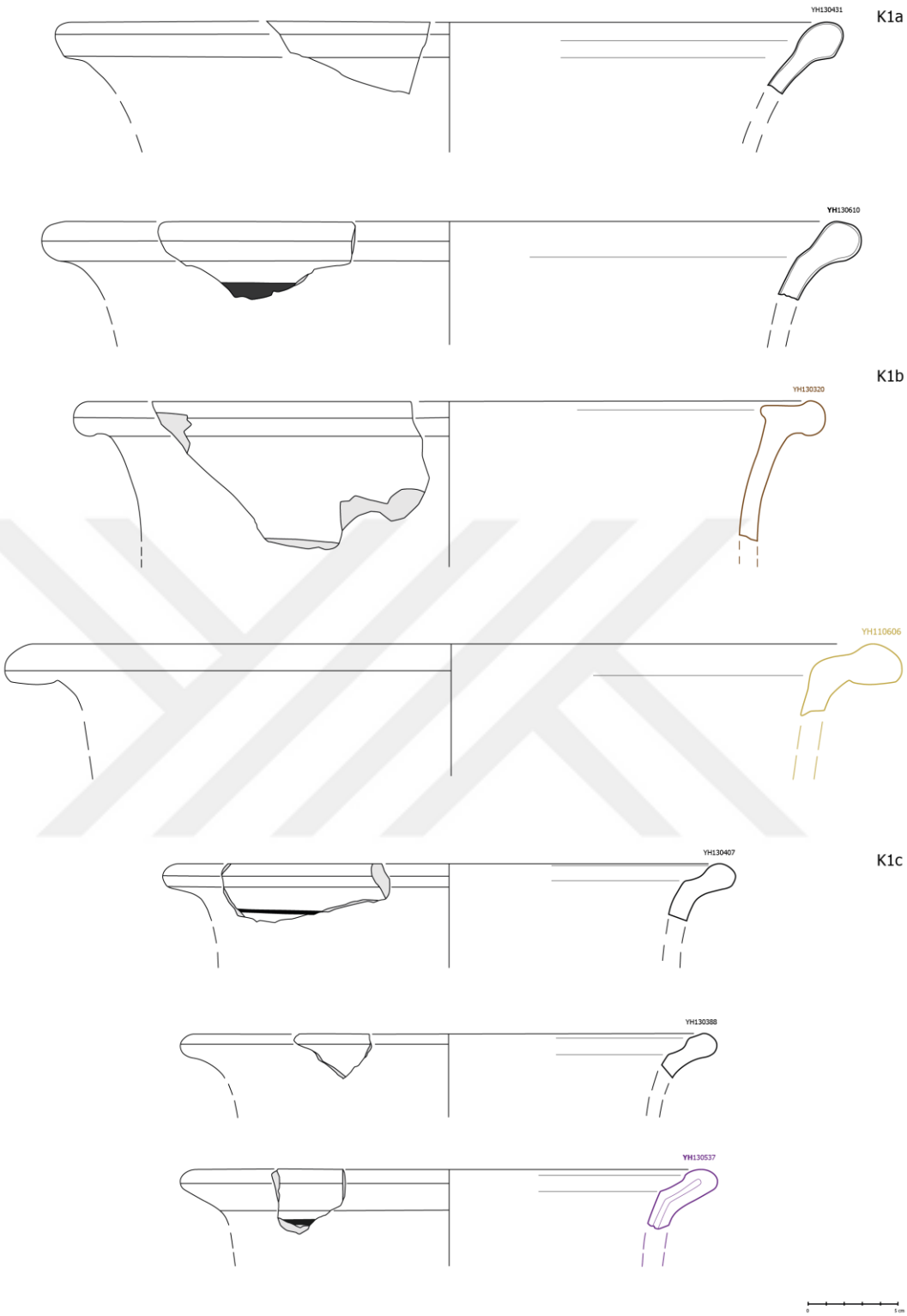


Figure 129. K1 kraters

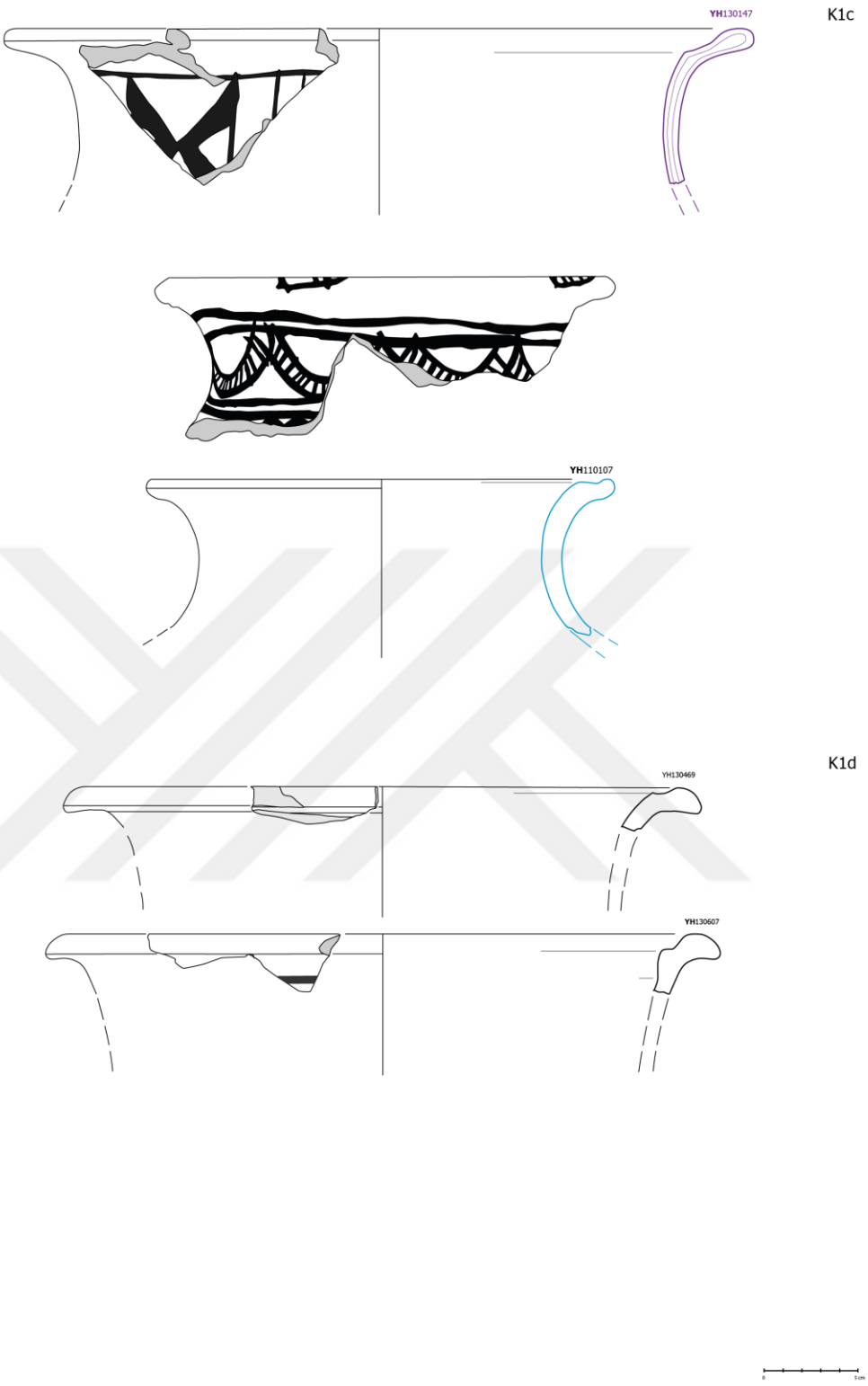


Figure 130. K1 kraters

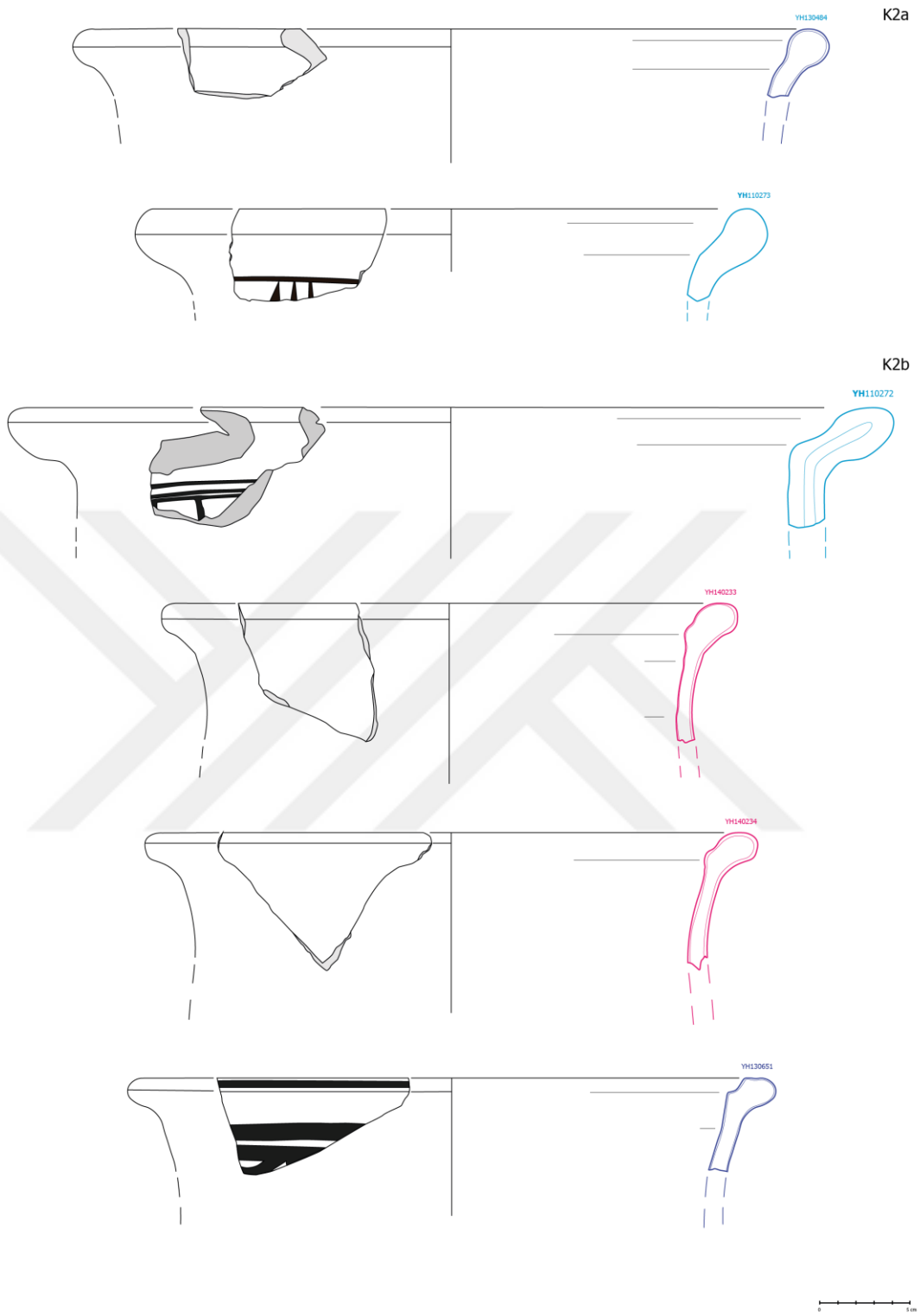


Figure 131. K2 kraters

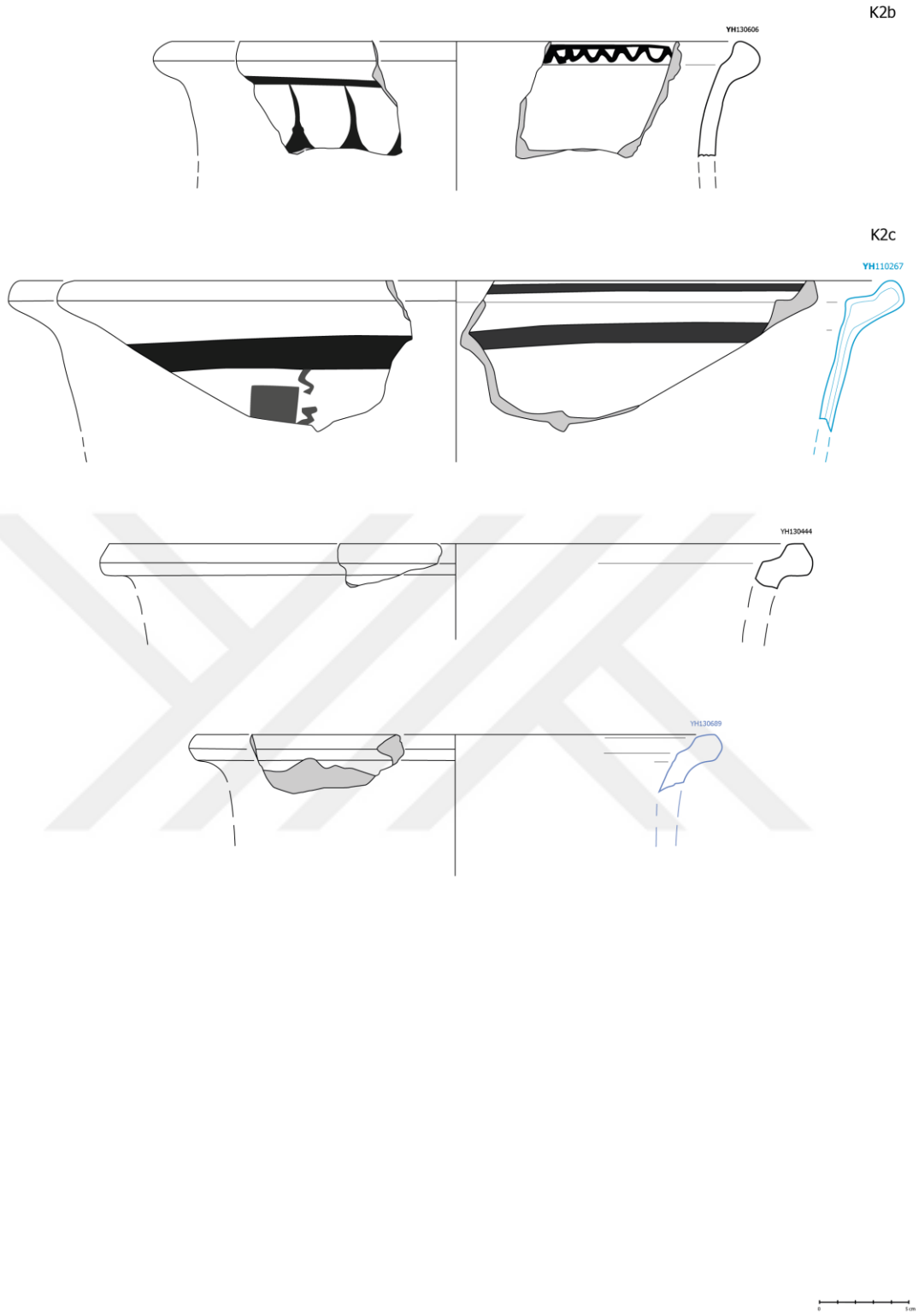


Figure 132. K2 kraters

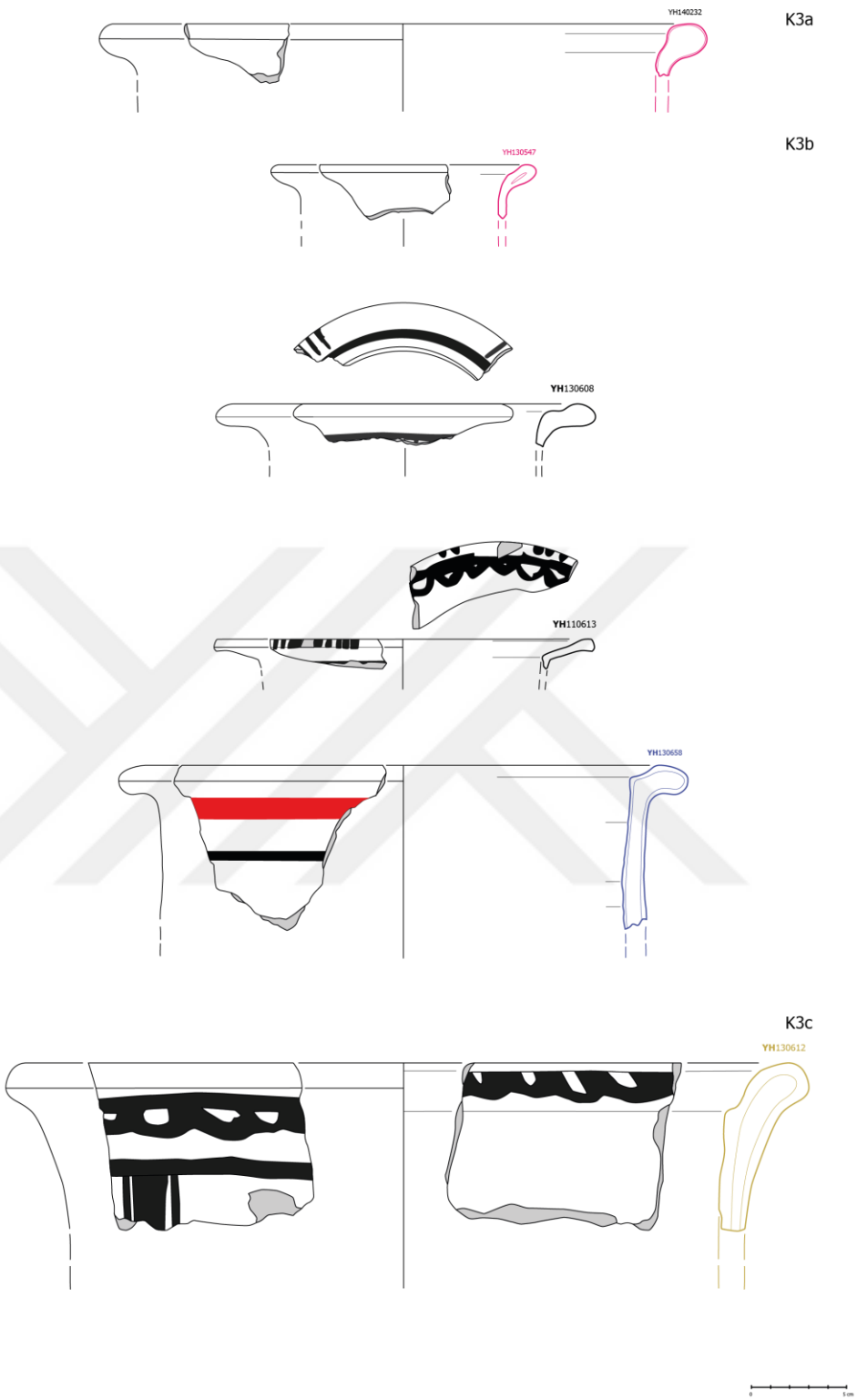


Figure 133. K3 kraters

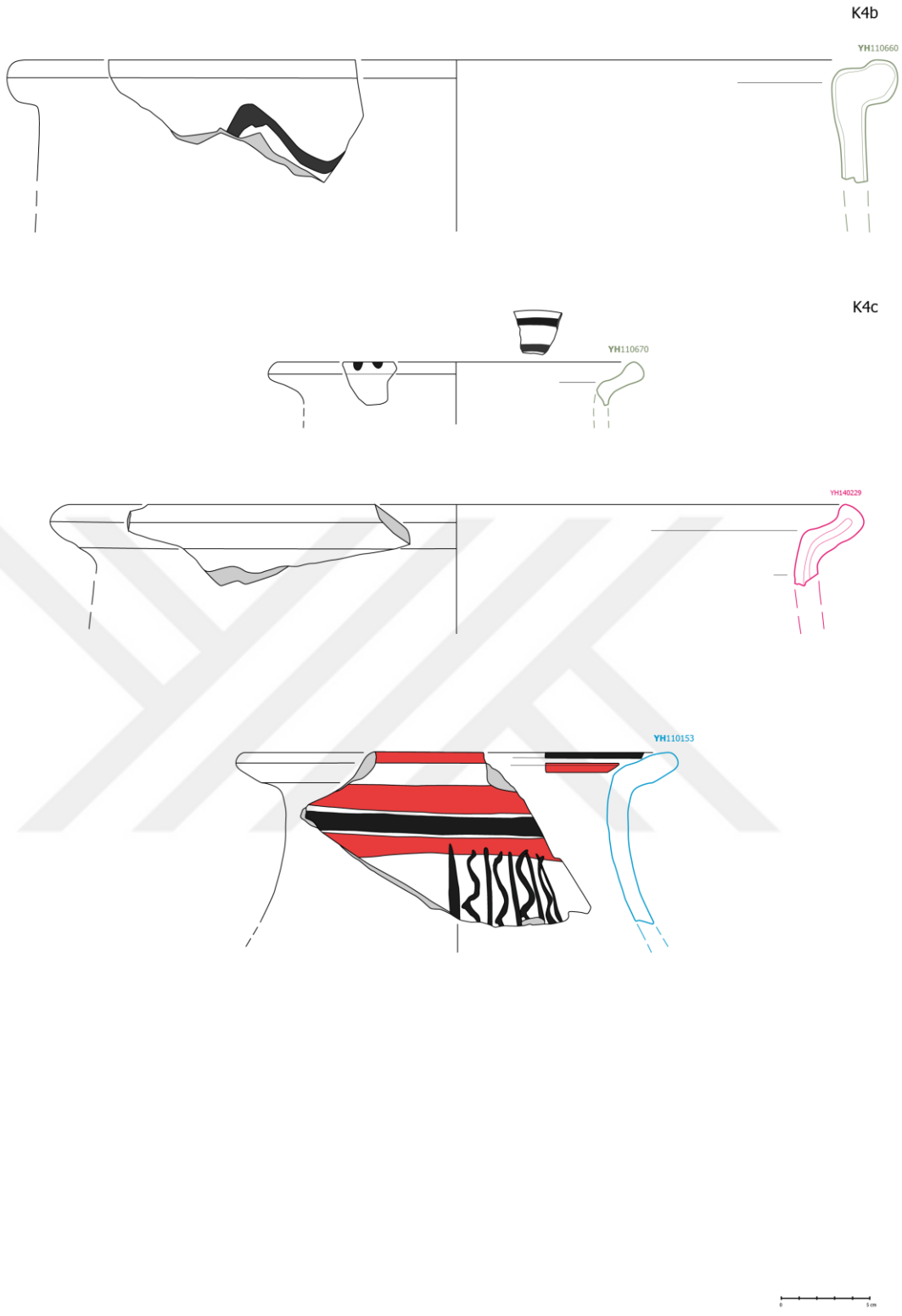


Figure 134. K4 kraters

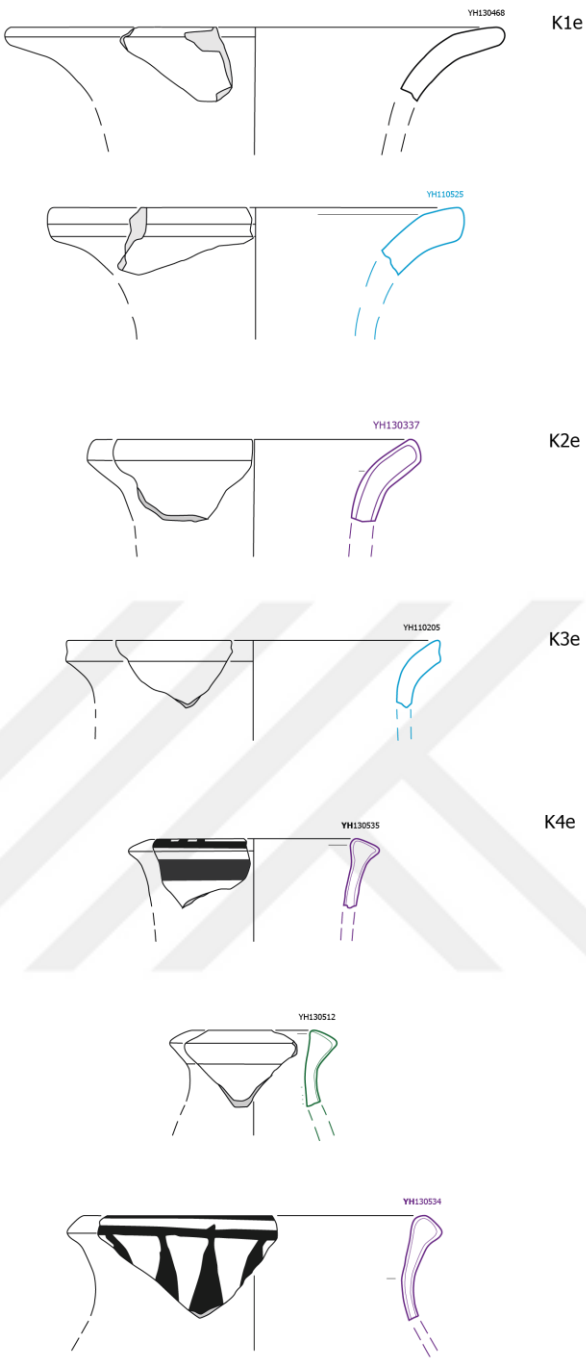


Figure 135. K1-K4 jars

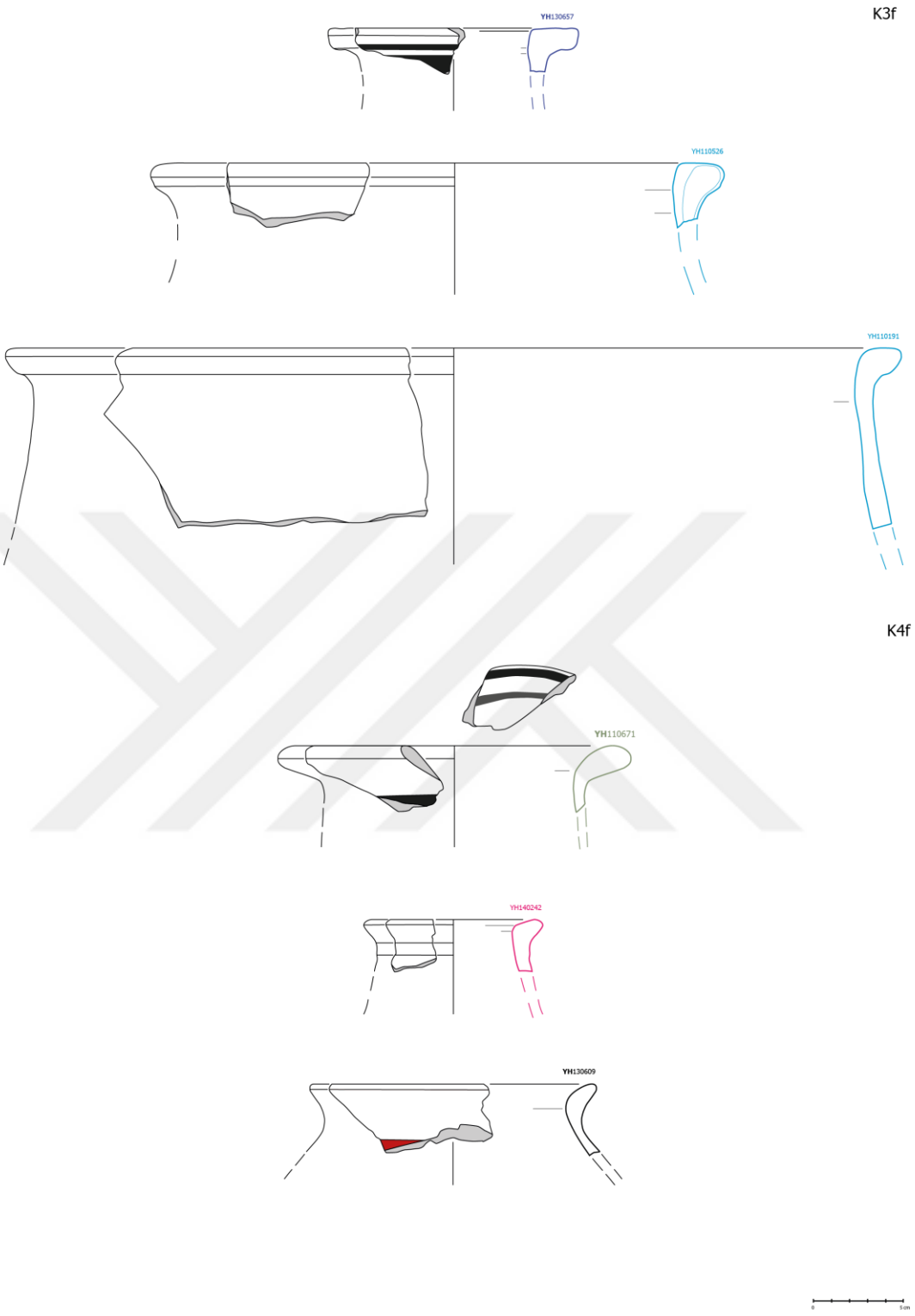


Figure 136. K3-K4 jars

| YH-No | Area | Main Grid | Sub-Grid | PL | Deposit | Phase | Form-Main | Form Group | Main Type | Type | Diameter |
|---|---|---|---|---|---|---|---|---|---|---|---|
| 110107 | 1 | E 8/ | d9 | 34 | P41 | I-9 | Krater | K1c | T1 | KR1 | 20-65% |
| 110153 | 1 | E 8/ | d9 | 34 | P41 | I-9 | Krater | K4c | T1 | KR1 | 20-19% |
| 110191 | 1 | E 8/ | d9 | 34 | P41 | I-9 | Krater | K3f | T1 | KR1 | 50-11% |
| 110205 | 1 | E 8/ | d9 | 34 | P41 | I-9 | Krater | K3e | T5 | KR5 | 18 – 10% |
| 110267 | 1 | E 8/ | d9 | 34 | P41 | I-9 | Krater | K2c | T1 | KR1 | 32-16% |
| 110272 | 1 | E 8/ | d9 | 34 | P41 | I-9 | Krater | K2b | T1 | KR1 | 36-6% |
| 110273 | 1 | E 8/ | d9 | 34 | P41 | I-9 | Krater | K2a | T1 | KR1 | 48 – 5% |
| 110525 | 1 | E 8/ | d9 | 34 | P41 | I-9 | Krater | K1e | T5 | KR5 | 20-9% |
| 110526 | 1 | E 8/ | d9 | 34 | P41 | I-9 | Krater | K3f | T4 | KR4 | 30-9% |
| 110606 | 1 | E 8/ | f10 | 61 | P34 | I-9 | Krater | K1b | T1 | KR1 | 38-5% |
| 110612 | 1 | E 8/ | f10 | 61 | P34 | I-9 | Krater | K3c | T1 | KR1 | 44-7% |
| 110613 | 1 | E 8/ | f10 | 61 | P34 | I-9 | Krater | K3b | T1 | KR1 | 14-17% |
| 110660 | 1 | E 8/ | f10 | 62 | P34 | I-9 | Krater | K4b | T3 | KR3 | 30-12% |
| 110670 | 1 | E 8/ | f10 | 62 | P34 | I-9 | Krater | K4c | T3 | KR3 | 18-5% |
| 110671 | 1 | E 8/ | f10 | 62 | P34 | I-9 | Krater | K4f | T2 | KR2 | 16-10% |
| 130147 | 1 | E 8/ | d 8 | 28 | P87 | I-9/I-10 | Krater | K1c | T1 | KR1 | 32-6% |
| 130320 | 1 | E 8/ | d8 | 37 | R65 | I-10 | Krater | K1b | T1 | KR1 | 42-10% |
| 130337 | 1 | E 8/ | d8 | 28 | P87 | I-9/I-10 | Krater | K2e | T1 | KR1 | 16-13% |
| 130388 | 1 | E 8/ | d8 | 34 | R59 | I-11 | Krater | K1c | T1 | KR1 | 30-5% |
| 130407 | 1 | E 8/ | d8 | 34 | R59 | I-11 | Krater | K1c | T1 | KR1 | 32-8% |
| 130431 | 1 | E 8/ | d8 | 34 | R59 | I-11 | Krater | K1a | T1 | KR1 | 44-7% |
| 130444 | 1 | E 8/ | d8 | 34 | R59 | I-11 | Krater | K2c | T5 | KR5 | 40-5% |
| 130468 | 1 | E 8/ | d8 | 34 | R59 | I-11 | Krater | K1e | T5 | KR5 | 24 – 6% |
| 130469 | 1 | E 8/ | d8 | 34 | R59 | I-11 | Krater | K1d | T4 | KR4 | 34-7% |
| 130484 | 1 | E 8/ | d8 | 48 | R59 | I-11 | Krater | K2a | T1 | KR1 | 42 – 7% |
| 130512 | 1 | E 8/ | d8 | 49 | R59 | I-11 | Krater | K4e | T5 | KR5 | 8-25% |
| 130534 | 1 | E 8/ | d8 | 28 | P87 | I-9/I-10 | Krater | K4e | T3 | KR3 | 18-18% |
| 130535 | 1 | E 8/ | d8 | 28 | P87 | I-9/I-10 | Krater | K4e | T1 | KR1 | 12-12% |
| 130537 | 1 | E 8/ | d8 | 28 | P87 | I-9/I-10 | Krater | K1c | T1 | KR1 | 30-4% |
| 130547 | 1 | E 8/ | d8 | 25 | P78 | I-9/I-10 | Krater | K3b | T1 | KR1 | 14-11% |
| 130606 | 1 | E 8/ | d8 | 34 | R59 | I-11 | Krater | K2b | T4 | KR4 | 34-8% |
| 130607 | 1 | E 8/ | d8 | 34 | R59 | I-11 | Krater | K1d | T4 | KR4 | 36-10% |
| 130608 | 1 | E 8/ | d8 | 34 | R59 | I-11 | Krater | K3b | T4 | KR4 | 16-25% |
| 130609 | 1 | E 8/ | d8 | 34 | R59 | I-11 | Krater | K4f | T4 | KR4 | 16-21% |
| 130610 | 1 | E 8/ | d8 | 34 | R59 | I-11 | Krater | K1a | T1 | KR1 | 46-8% |
| 130651 | 1 | E 8/ | d8 | 48 | R59 | I-11 | Krater | K2b | T3 | KR3 | 36-10% |
| 130657 | 1 | E 8/ | d8 | 48 | R59 | I-11 | Krater | K3f | T4 | KR4 | 14-16% |
| 130658 | 1 | E 8/ | d8 | 48 | R59 | I-11 | Krater | K3b | T1 | KR1 | 30-12% |
| 130689 | 1 | E 8/ | d8 | 54 | R33 | I-11 | Krater | K2c | T1 | KR1 | 30-9% |
| 140229 | 1 | E 8/ | d8 | 63 | P78 | I-9/I-10 | Krater | K4c | T1 | KR1 | 46-11% |
| 140232 | 1 | E 8/ | d8 | 63 | P78 | I-9/I-10 | Krater | K3a | T1 | KR1 | 32-6% |
| 140233 | 1 | E 8/ | d8 | 63 | P78 | I-9/I-10 | Krater | K2b | T1 | KR1 | 32-7% |
| 140234 | 1 | E 8/ | d8 | 63 | P78 | I-9/I-10 | Krater | K2b | T1 | KR1 | 34-11% |
| 140242 | 1 | E 8/ | d8 | 63 | P78 | I-9/I-10 | Krater | K4f | T4 | KR4 | 10-9% |

Figure 137. Descriptive Catalogue of krater types K

| YH-No | Fabric | CoreColor-Inclusion(Density+Size) | Surface/Out | Surface/In |
|---|---|---|---|---|
| 110107 | O-L | O-C(F-F), L(F-C, M-M, H-F), G(M-F), M | Burnished | Smoothed |
| 110153 | O | O-C(F-F), L(H-F) G(M-F), M | Smoothed | Smoothed |
| 110191 | G-G | G-C(M-F), G(H-M&F), M | Burnished | Smoothed |
| 110205 | G-G | G-C(M-F), G(H-M&F), M | Smoothed | Smoothed |
| 110267 | G-C | G-C(F-C, H-M, H-F), L(F-M, H-F), G(F-M, H-F), M | Burnished | Smoothed |
| 110272 | G-M | G-C(F-M, M-F), L(H-F), G(F-C, H-F), M | Smoothed | Smoothed |
| 110273 | O-G | O-C(H-F), L(M-M, H-F), G(H-M, H-F), M | Polished | Polished |
| 110525 | B-C | B-C(H-F), L(H-F, F-M), G(F-M), M | Polished | Polished |
| 110526 | O-G | O-C(H-M&F), L(F-C&M, H-F), G(H-M&F), M | Polished | Polished |
| 110606 | G-G | G-C(H-M&F), L(M-M&F) G(F-C, H-M&F), M | Burnished | Burnished |
| 110612 | G-G | O-C(F-F), L(F-M, F-F), G(F-M, H-F), M | Burnished | Smoothed |
| 110613 | O | O-C(F-F), L(F-F) G(H-F), M | Burnished | Burnished |
| 110660 | G-L | G-C(F-M, H-F), L(H-M&F), G(H-M&F), M | Smoothed-Slip | Smoothed |
| 110670 | G | G-C(F-F), L(F-F), G(F-F) | Burnished | Burnished |
| 110671 | O-L | O-C(F-F), L(H-M&F), G(M-F), M | Smoothed | Smoothed |
| 130147 | G-L | G-C(F-F), L(F-M, H-F), G(H-F), M | Polished | Polished |
| 130320 | G-C | G-C(H-M&F), G(F-F), M | Smoothed | Smoothed |
| 130337 | G-C | G-C(F-F), G(F-F), M | Smoothed-Slip | Smoothed-Slip |
| 130388 | O-G | O-C(F-F), G(H-M&F), M | Burnished | Burnished |
| 130407 | O-G | O-C(F-F), G(H-M&F), M | Burnished | Burnished |
| 130431 | G-C | G-C(H-M), G(H-F), M | Polished | Polished |
| 130444 | B-G | B-C(F-F), G(F-C, H-M&F), M | Polished | Polished |
| 130468 | B-G | B-C(H-F), G(F-M, H-F), M | Polished | Polished |
| 130469 | O-G | O-C(F-F), G(F-M&F), M | Polished-Slip | Polished-Slip |
| 130484 | G-C | G-C(H-M&F), L(F-F, F-M), G(H-F), M | Burnished-Slip | Burnished-Slip |
| 130512 | G-G | G-C(F-F), G(F-F), M | Burnished | Smoothed |
| 130534 | G-C+L | G-C(H-F), L(H-F, F-M), G(H-F, F-M), M | Burnished | Smoothed |
| 130535 | O-L | O-C(F-F), L(F-M, H-F) G(F-M&F), M | Smoothed | Smoothed |
| 130537 | G-G | G-C(F-F), L(F-M), G(H-M&F), M | Burnished | Burnished |
| 130547 | O-G | O-C(F-F), L(F-F) G(F-M&F), M | Smoothed | Burnished |
| 130606 | O-L | O-C(F-F), L(F-C, H-M, H-F)İ G(F-C, H-F), M | Burnished | Burnished |
| 130607 | O-L | O-C(F-F), L(F-C, M-M, H-F), G(M-F), M | Smoothed | Smoothed |
| 130608 | O-L | O-C(F-F), L(F-M, H-F), G(H-F), M | Polished-Slip | Polished-Slip |
| 130609 | O-G | O-C(F-M, M-F), G(F-C, H-M&F), M | Smoothed | Smoothed |
| 130610 | G-C+L | G-C(H-F), L(H-F, F-M), G(F-M), M | Burnished-Slip | Burnished-Slip |
| 130651 | G-C+L | G-C(H-F), L(M-F), G(H&F), M | Smoothed | Burnished |
| 130657 | G-L | G-C(H-F), L(H-F), G(H&F), M | Smoothed | Smoothed |
| 130658 | G-C | G-C(H-F, H-M), L-G(H-F, F-M), M | Smoothed | Smoothed |
| 130689 | O-G | O-C(F-F), G(F-C, H-M&F), M | Burnished | Burnished |
| 140229 | G-C+L | G-C(F-C, H-M), L(H-M&F), G(F-C&M, H-F), M | Burnished | Burnished |
| 140232 | G-C+L | G-C(F-C, H-F), L(H-F), G(H-F), M | Smoothed | Smoothed |
| 140233 | G-C | G-C(H-M, F-C), G+L(H-F), M | Smoothed | Smoothed |
| 140234 | G-C | G-C(H-M, F-C), G+L(H-F), M | Smoothed | Smoothed |
| 140242 | O-G | O-C(F-C&F), G(H-M&F), M | Burnished | Smoothed |

Figure 138. Descriptive Catalogue of krater types K

| YH-No | Color/Out | Color/In | Color/Fabric-Core | Color / Paint | Decoration |
|---|---|---|---|---|---|
| 110107 | 7.5YR 7/4 | 7.5YR 7/4 | 7.5YR 6/4 | 5YR 3/2 | FestoonFillLine-LineHorz |
| 110153 | 7.5YR 7/4 | 7.5YR 7/4 | 7.5YR 7/3 | 10R 4/6-5YR 3/ | WavyLine-LineVert-LineHorz |
| 110191 | 5YR 7/6 | 5YR 7/6 | 5YR 7/6 | | |
| 110205 | N 5/0 | N 4/0 | 10YR 5/1 | | |
| 110267 | 10R 6/8 | 10R 6/8 | 5YR 7/4 – N 4/0 | 10R 2/1 | LineHorz |
| 110272 | 10R 6/6 | 10R 6/6 | 5YR 7/4 – N 6/0 | 7.5YR 4/2 | LineVert-LineHorz |
| 110273 | 7.5YR 7/4 | 7.5YR 7/4 | 5YR 7/4 | 7.5YR 3/1 | Rays-LineHorz |
| 110525 | 7.5YR 5/2 | 10YR 5/1 | N 3/0 | | Black Polished |
| 110526 | 2.5Y 8/3 | 2.5Y 8/3 | 2.5YR 7/6 – 8/4 | | |
| 110606 | 5YR 6/4 | 5YR 6/4 | 5YR 6/4 – N 4/0 | | |
| 110612 | 5YR 7/6 | 5YR 6/6 | 5YR 7/4 – N 5/0 | 5YR 2/1 | Bows-LineHorz-LineVert |
| 110613 | 5YR 6/6 | 5YR 6/6 | 5YR 6/6 | 5YR 4/1 | Bows-LineHorz-LineVert |
| 110660 | 5Y 8/2 | 7.5YR 7/3 | 7.5YR 7/3 – N 5/0 | 5YR 4/1 | WavyLine |
| 110670 | 5Y 8/2 | 5Y 8/3 | 10YR 5/1 | 10YR 3/1 | LineVert-LineHorz |
| 110671 | 2.5YR 7/4 | 2.5YR 7/4 | 2.5YR 6/6 | 2.5YR 2/1 | LineHorz |
| 130147 | 2.5YR 6/6 | 5YR 7/4 – 10YR 8/3 | 5YR 7/4-7.5YR 5/1 | 5YR 3/2 | Cross-LineVert-LineHorz |
| 130320 | 2.5YR 7/4 | 2.5YR 7/4 | 2.5YR 7/4 – N 4/0 | | |
| 130337 | 7.5YR 4/6 | 7.5YR 4/6 | 2.5YR 7/4 – N 4/0 | | |
| 130388 | 7.5YR 5/4 | 7.5YR 4/3 | 2.5YR 6/3 | | |
| 130407 | 5YR 5/3-6/3 | 5YR 5/3-6/3 | 5YR 6/3-6/2 | 10R 4/1 | LineHorz |
| 130431 | 5YR 8/3 | 5YR 7/4 | 5YR 8/3 – N 5/0 | | |
| 130444 | 2.5YR 4/1 | 2.5YR 4/1 | N 3/0 | | Black Polished |
| 130468 | 10YR 5/2 | 10YR 6/3 | N 6/0 | | Black Polished |
| 130469 | 7.5YR 8/3 | 7.5YR 8/3 | 5YR 8/4 | | |
| 130484 | 10R 5/6 | 10R 5/6 | 7.5YR 7/4 – N 5/0 | | |
| 130512 | 7.5YR 7/3 | 7.5YR 7/3 | 10YR 7/3 – 4/1 | | |
| 130534 | 10YR 8/3 | 10YR 8/3 | 7.5YR 7/6 | 5YR 2/1 | Rays-LineHorz |
| 130535 | 2.5YR 6/4 | 2.5YR 6/6 | 2.5YR 6/6 | 2.5YH 4/1 | LineVert-LineHorz |
| 130537 | 5YR 8/4 | 5YR 8/4 | 5YR 8/4 – 7.5YR 6/1 | 5YR 5/1 | LineHorz |
| 130547 | 5YR 7/4 | 5YR 7/4-5/6 | 10YR 7/3 | | |
| 130606 | 2.5YR 8/2 | 10YR 8/3 | 7.5YR 7/6 | 7.5YR 4/2 | Rays-WavyLine-LineHorz |
| 130607 | 7.5YR 8/3 | 2.5YR 8/3 | 7.5YR 6/6 | 7.5YR 4/2 | Line / Horizontal / Thick |
| 130608 | 10YR 8/3 | 5Y 8/3 | 5YR 6/6 | 5YR 2/1 | LineHorz-LineVert |
| 130609 | 7.5YR 8/4 | 7.5YR 7/4 | 5YR 8/4 | 10R 6/6 | LineHorz |
| 130610 | 10R 6/6 | 10R 6/6 | 5YR 8/4 – N 5/0 | 10R 4/1 | LineHorz |
| 130651 | 2.5YR 8/2 | 5YR 8/4 | 2.5YR 7/6-N 5/0 | 5YR 2/1 | Bow-LineHorz |
| 130657 | 2.5YR 8/2 | 5YR 8/2 | 5YR 8/4 | 5YR 3/2 | LineHorz |
| 130658 | 5YR 7/4 | 5YR 7/4 | 5YR 7/6 – N 4/0 | 5YR 2/1-2.5YR 6/6 | LineHorz |
| 130689 | 10R 5/4 | 5YR 8/4 | 5YR 6/8 | | |
| 140229 | 7.5YR 7/4 | 5YR 7/4 | 7.5YR 7/4 – N 5/0 | | |
| 140232 | 5YR 6/4 | 7.5YR 6/4 | 7.5YR 6/1 – N 5/0 | | |
| 140233 | 5YR 8/4 – 7.5YR 8/3 | 10YR 8/3 | 2.5YR 8/4 – N 5/0 | | |
| 140234 | 7.5YR 7/4 | 10YR 8/3 | 7.5YR 8/4 – N 5/0 | | |
| 140242 | 5YR 7/4 | 5YR 7/4 | 2.5YR 6/6 | | |

Figure 139. Descriptive Catalogue of krater types K

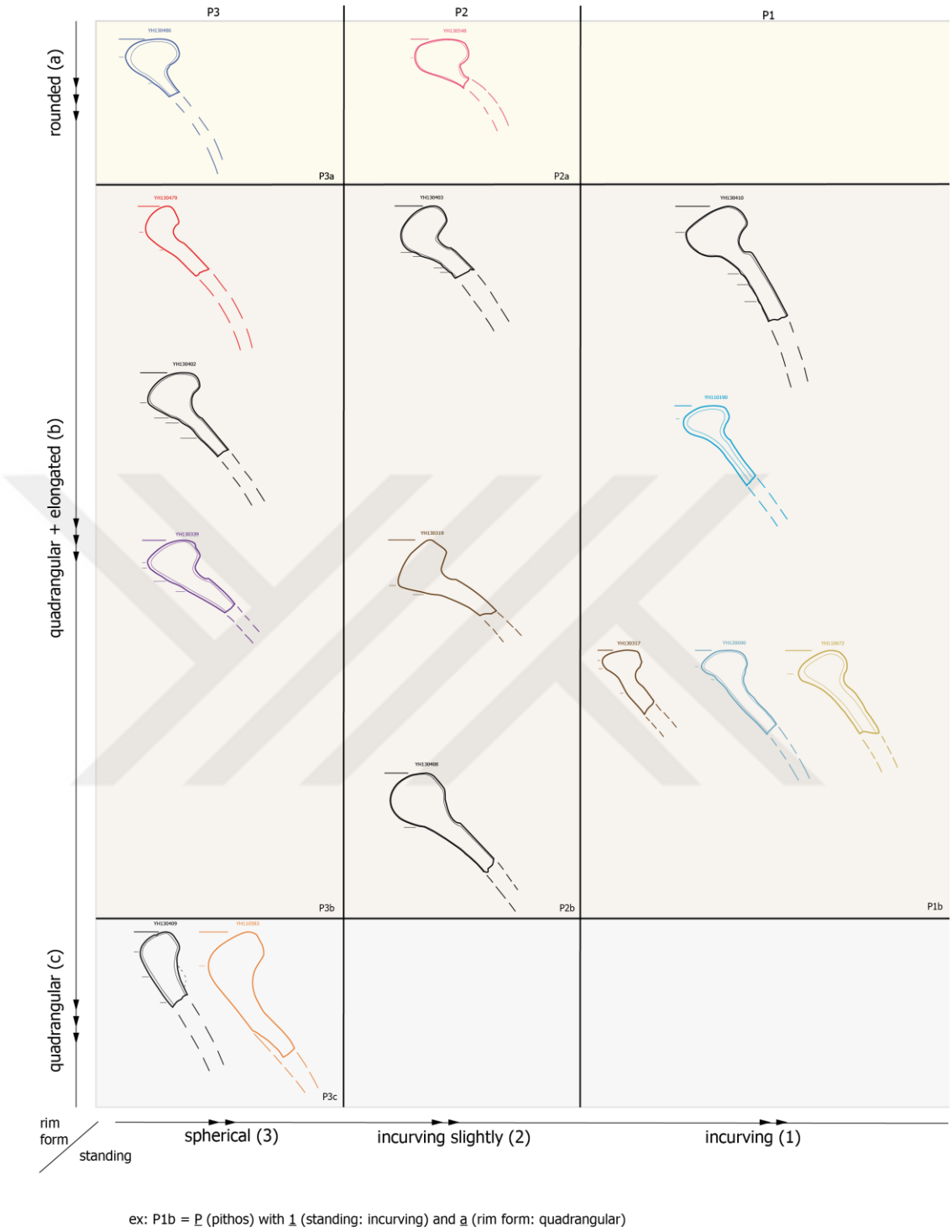


Figure 140. Summary of pithos type P

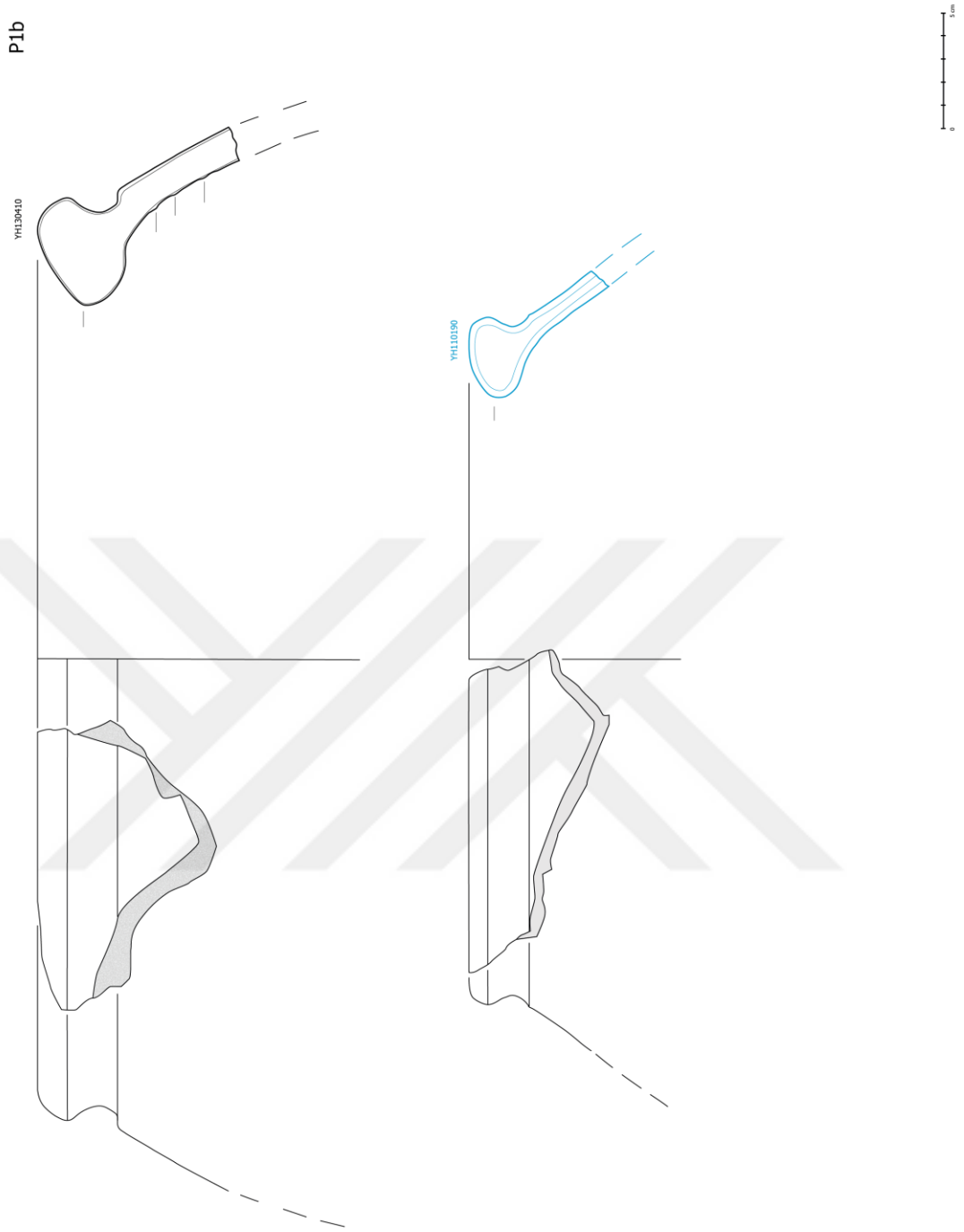


Figure 141. P1 pithoi

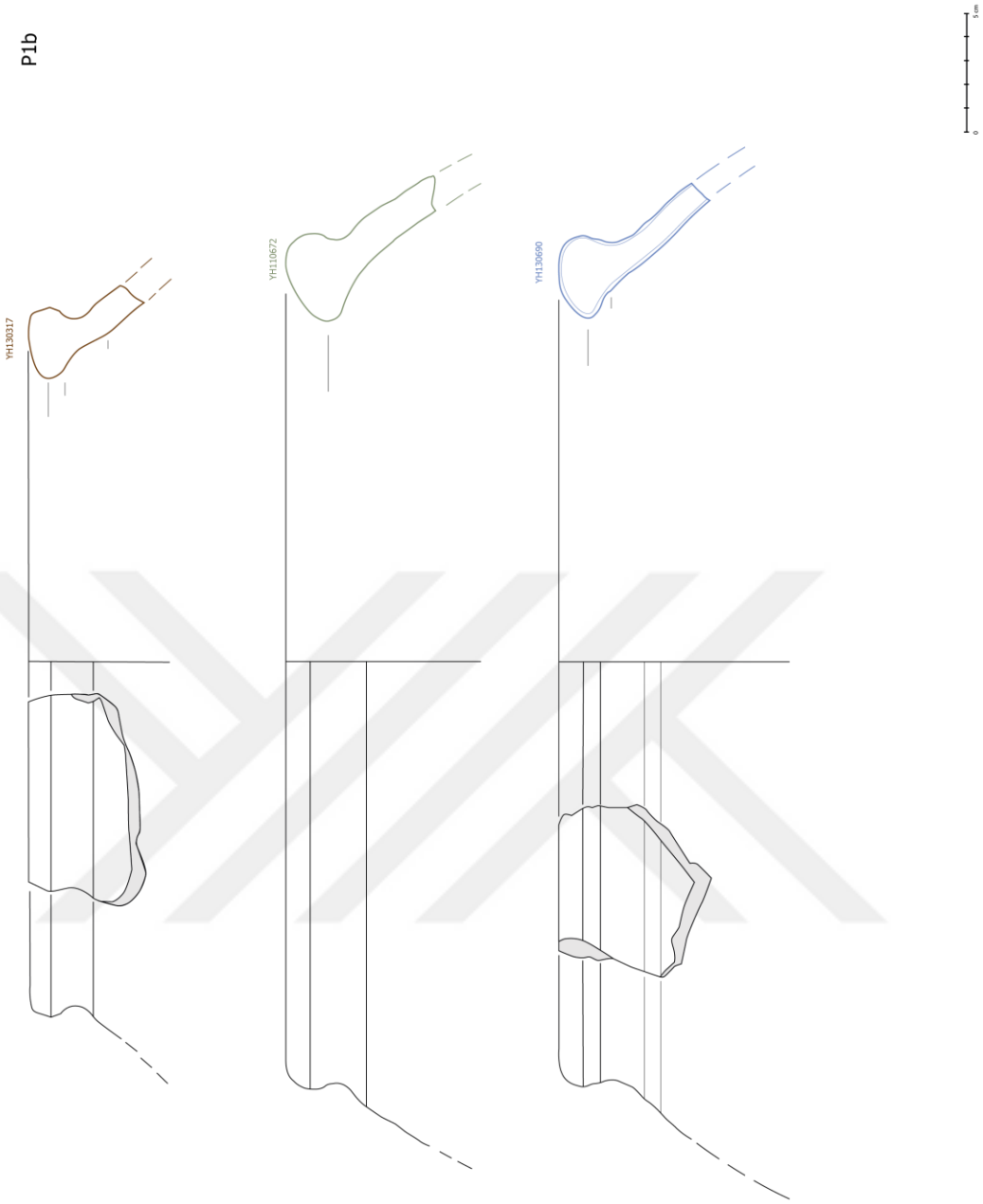


Figure 142. P1 pithoi

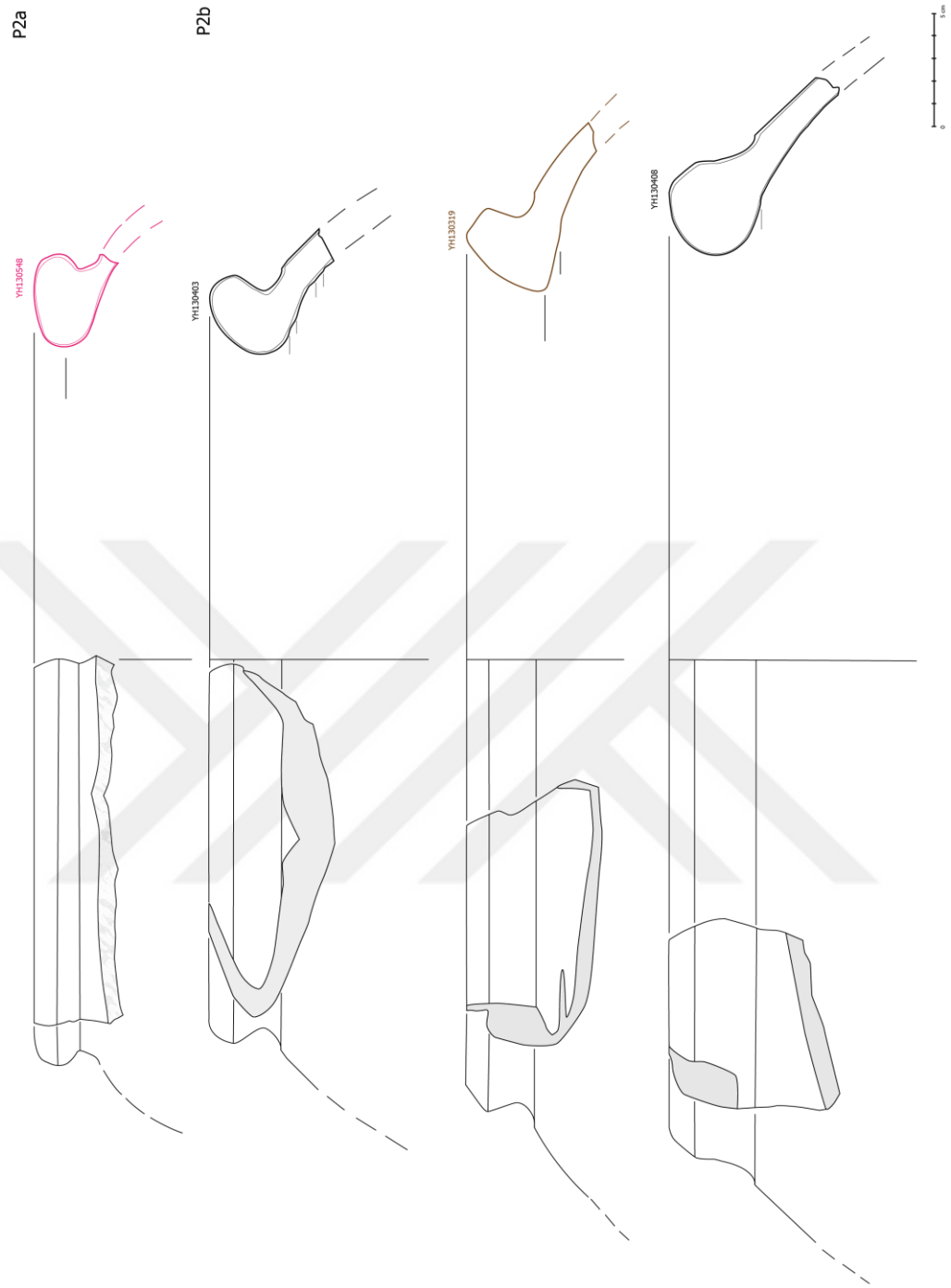


Figure 143. P2 pithoi

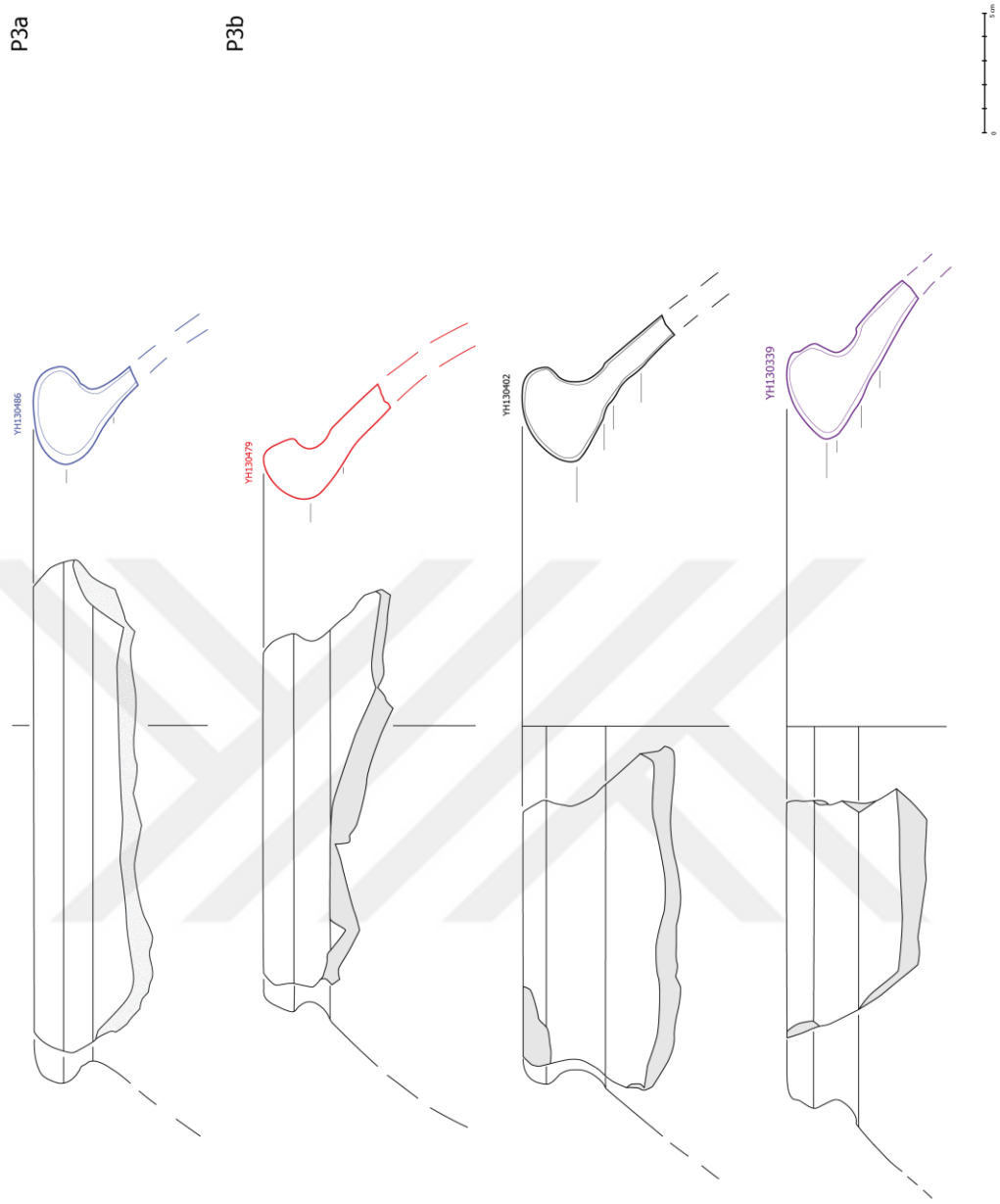


Figure 144. P3 pithoi

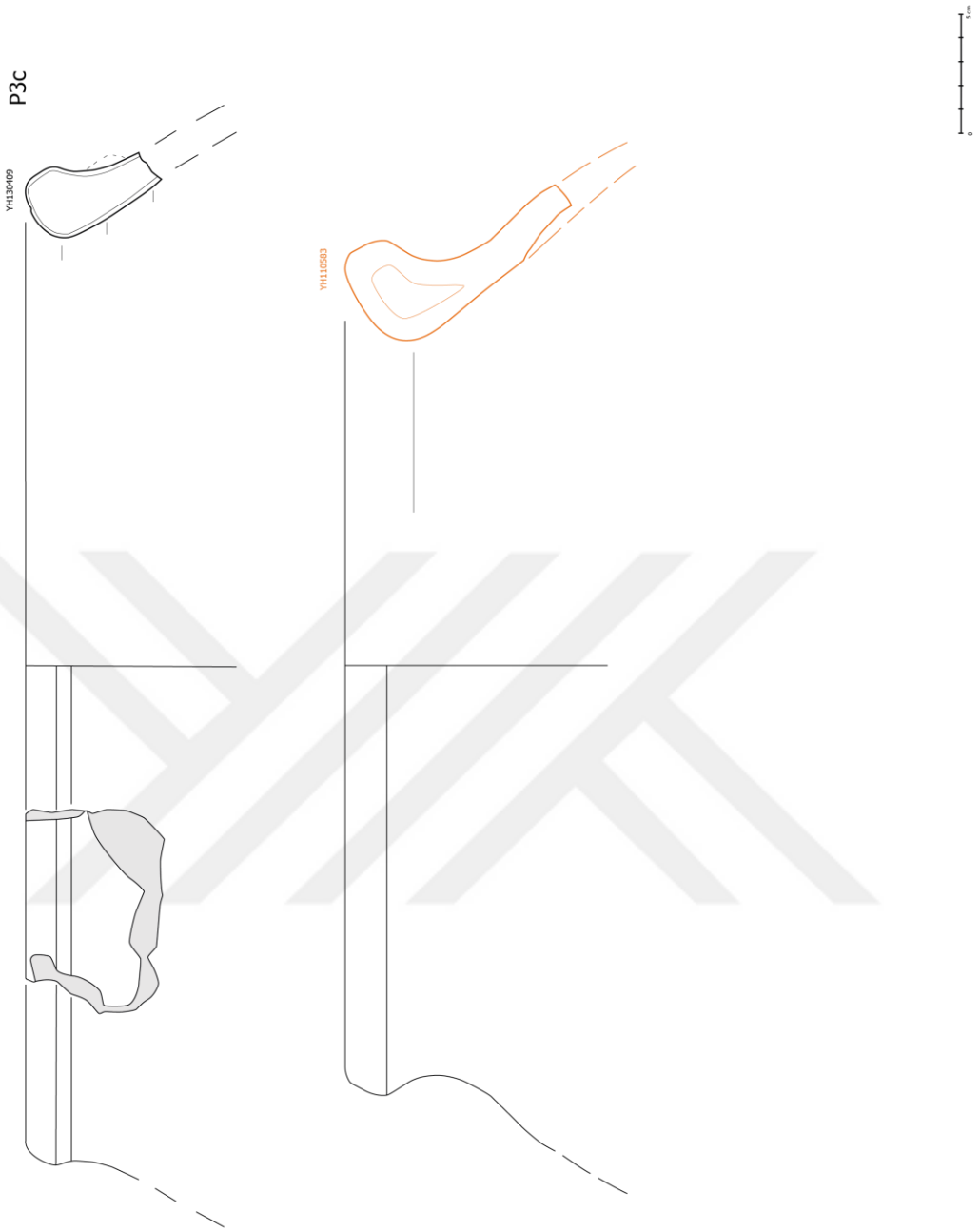


Figure 145. P3 pithoi

| YH-No | Area | Main Grid | Sub-Grid | PL | Deposit | Phase | Form-Main | Form Group | Main Type | Type | Diameter |
|---|---|---|---|---|---|---|---|---|---|---|---|
| 110190 | 1 | E 8/ | d9 | 34 | P41 | I-9 | Pithos | P1b | T3 | PT3 | 30-15% |
| 110583 | 1 | E 8/ | f10 | 60 | P34 | I-9 | Pithos | P3c | T4 | PT4 | 36-10% |
| 110672 | 1 | E 8/ | f10 | 62 | P34 | I-9 | Pithos | P1b | T2 | PT2 | 36-10% |
| 130317 | 1 | E 8/ | d8 | 37 | R65 | I-10 | Pithos | P1b | T1 | PT1 | 30-9% |
| 130319 | 1 | E 8/ | d8 | 37 | R65 | I-10 | Pithos | P2b | T1 | PT1 | 38-8% |
| 130339 | 1 | E 8/ | d8 | 28 | P87 | I-9/I-10 | Pithos | P3b | T1 | PT1 | 32-5% |
| 130402 | 1 | E 8/ | d8 | 34 | R59 | I-11 | Pithos | P3b | T2 | PT2 | 30-13% |
| 130403 | 1 | E 8/ | d8 | 34 | R59 | I-11 | Pithos | P2b | T3 | PT3 | 34-11% |
| 130408 | 1 | E 8/ | d8 | 34 | R59 | I-11 | Pithos | P2b | T2 | PT2 | 44 -4% |
| 130409 | 1 | E 8/ | d8 | 34 | R59 | I-11 | Pithos | P3c | T3 | PT3 | 42-5% |
| 130410 | 1 | E 8/ | d8 | 34 | R59 | I-11 | Pithos | P1b | T3 | PT3 | 40 -10% |
| 130479 | 1 | E 8/ | d8 | 47 | R59 | I-11 | Pithos | P3b | T3 | PT3 | 24 -11% |
| 130486 | 1 | E 8/ | d8 | 48 | R59 | I-11 | Pithos | P3a | T1 | PT1 | 30-20% |
| 130548 | 1 | E 8/ | d8 | 25 | P78 | I-9/I-10 | Pithos | P2a | T3 | PT3 | 36-16% |
| 130690 | 1 | E 8/ | d8 | 54 | R33 | I-11 | Pithos | P1b | T1 | PT1 | 36 -6% |

| YH-No | Fabric | CoreColor-Inclusion(Density+Size) | Surface/Out | Surface/In |
|---|---|---|---|---|
| 110190 | G-G | G-G (H-M) | Burnished | Smoothed |
| 110583 | O-G | O-C (F-F), L(H-F) G(F-C, H-M, H-F), no mica | Burnished | Smoothed |
| 110672 | G-L | G-C (M-F), L(H-M&F), G(H-M&F), M | Smoothed | Smoothed |
| 130317 | G-C | G-C (H-C, H-M) | Smoothed | Smoothed |
| 130319 | G-G | G-G+L (F-M) | Smoothed | Smoothed |
| 130339 | G-C | G-C (H-F, F-C), G+L(H-F), M | Smoothed | Smoothed |
| 130402 | G-G | G-C (H-M), G(F-M), M | Smoothed | Smoothed |
| 130403 | G-C+M | G-C (H-M), L(H-F, M-M), M | Smoothed-Slip | Smoothed |
| 130408 | G-C+L | G-C (H-C), L(H-F), G(H-M), M | Smoothed | Smoothed |
| 130409 | G-C | G-C (H-C), L(F-F), G(H-M), M | Smoothed-Slip | Smoothed-Slip |
| 130410 | G-C | G-L-(F-F, F-M), C-(H-C), M(H-F), G(F-C) | Smoothed-Slip | Smoothed |
| 130479 | G-C+L | G-C (H-C, H-M), G(H-M&F), G(F-C), M | Smoothed-Slip | Smoothed |
| 130486 | G-G | G-C (H-M, H-F), G(F-C), M | Smoothed | Smoothed |
| 130548 | G-L | G-L-(H-F, F-M), C-(M-M), M(H-F) | Smoothed-Slip | Smoothed |
| 130690 | G-G+L | G-C (H-F, F-M), L (F-F, F-M), G(M-M), M(H-F) | Smoothed | Smoothed |

Figure 146. Descriptive Catalogue of P pithoi

| YH-No | Color/Out | Color/In | Color/Fabric-Core |
|---|---|---|---|
| 110190 | 10YR 7/3 | 10YR 7/3 | N 4/0 |
| 110583 | 5YR 8/4 – 7.5YR 8/3 | 2.5YR 6/4 | 5YR 6/6 |
| 110672 | 5YR 7/6 | 5YR 7/4 | 5YR 7/4 – N 4/0 |
| 130317 | 5YR 7/4 | 5YR 7/2 | N 3/0 |
| 130319 | 2.5YR 6/3 | 2.5YR 6/3 | 2.5YR 6/4 |
| 130339 | 2.5YR 6/2 | 2.5YR 6/4 | N 3/0 |
| 130402 | 2.5YR 7/4 | 2.5YR 7/4 | 2.5YR 7/3 – N 4/0 |
| 130403 | 10YR 7/3 | 7.5YR 7/2 | 7.5YR 7/4 – N 5/0 |
| 130408 | 5YR 7/3 | 5YR 6/4 | 5YR 8/3 – N 5/0 |
| 130409 | 7.5YR 8/2 | 7.5YR 8/2 | 2.5YR 7/2 |
| 130410 | 5YR 8/2 | 5YR 7/3 | 5YR 7/2 – N 4/0 |
| 130479 | 2.5YR 7/2 | 7.5YR 5/1 | 5YR 8/3 – 7.5YR 5/1 |
| 130486 | 7.5YR 7/4 | 7.5YR 7/4 | 10YR 7/3 |
| 130548 | 2.5YR 8/2 | 7.5YR 7/4 | 7.5YR 7/4 – N 6/0 |
| 130690 | 7.5YR 7/4 | 7.5YR 7/4 | 7.5 YR 4/1 |

Figure 147. Descriptive Catalogue of P pithoi