**ISTANBUL TECHNICAL UNIVERSITY ★ GRADUATE SCHOOL OF SCIENCE ENGINEERING AND TECHNOLOGY**

# IMPACTS OF DISTRIBUTED GENERATIONS ON DISTRIBUTION SYSTEM RELIABILITY

**M.Sc. THESIS**

**Sorush SAEEDI**

**Department of Electrical Engineering**

**Electrical Engineering Programme**

**MAY 2016**

**ISTANBUL TECHNICAL UNIVERSITY ★ GRADUATE SCHOOL OF SCIENCE ENGINEERING AND TECHNOLOGY**

# IMPACTS OF DISTRIBUTED GENERATIONS ON DISTRIBUTION SYSTEM RELIABILITY

**M.Sc. THESIS**

**Sorush SAEEDI**
**(504131024)**

**Department of Electrical Engineering**

**Electrical Engineering Programme**

**Thesis Advisor: Prof. Dr. Aydogan OZDEMIR**

**MAY 2016**

**İSTANBUL TEKNİK ÜNİVERSİTESİ ★ FEN BİLİMLERİ ENSTİTÜSÜ**

# DAĞITIK GÜÇ ÜRETİMİNİN ELEKTRİK DAGITIM SİSTEMLERİNİN GÜVENİLİRLİĞİ ÜZERİNDE ETKİSİ

**YÜKSEK LİSANS TEZİ**

**Sorush SAEEDI**
**(504131024)**

**Elektrik Mühendisliği Anabilim Dalı**

**Elektrik Mühendisliği Programı**

**Tez Danışmanı: Prof. Dr. Aydoğan ÖZDEMIR**

**MAYIS 2016**

**Sorush SAEEDI**, a **M.Sc.** student of ITU **Graduate School of Electrical & Elcectronic Engineering** student ID 504131024, successfully defended the **thesis/dissertation** entitled "**IMPACTS OF DISTRIBUTED GENERATIONS ON DISTRIBUTION SYSTEM RELIABILITY**" which he prepared after fulfilling the requirements specified in the associated legislations, before the jury whose signatures are below.

| | | |
|---|---|---|
| **Thesis Advisor :** | **Prof. Dr. Aydoğan ÖZDEMIR**<br>İstanbul Technical University | ..... |
| **Jury Members :** | **Assoc. Prof. Dr. Ramazan Çağlar**<br>İstanbul Technical University | ..... |
| | **Asst. Prof. Dr. Oğuzhan CEYLAN**<br>İstanbul Kemerburgaz University | ..... |

**Date of Submission : 04 May 2016**
**Date of Defense : 27 May 2016**

-

***To my beloved wife for all of her supporting and understanding,***

***To my family for all of her kindness since my childhood,***

## FOREWORD

I would like to thank my supervisor Professor Dr. Aydogan Ozdemir for giving me valuable advice and support always when needed. I like to give my special thanks for giving me an opportunity to share their knowledge and the best available information about electrical test systems and their theoretical backgrounds. Other important persons considering my thesis is Dr. Oguzhan ceylan whom by taking time to me and my work helped me a lot.

May 2016

Sorush SAEEDI
(Electrical Engineer)

**TABLE OF CONTENTS**

**Page**

**FOREWORD……..…….....ix**
**TABLE OF CONTENTS…..……...xi**
**ABBREVIATIONS…..……..xiii**
**LIST OF TABLES…..……....…xvii**
**LIST OF FIGURES……..….……..xv**
**SUMMARY…….....……...xix**
**ÖZET.....……..……...xxi**
**1. INTRODUCTION.....1**
1.1. Distributed Energy Resources.....2
1.2. Power System Reliability Analaysis.....4
1.3. Objective.....5
1.4. Literature Review.....7
**2. DISTRIBUTED GENERATION MODELS.....11**
2.1. Photovoltaic Output Power Model.....12
2.2. Wind Turbine Output Power Model.....14
2.3. Gas Turbine Output Power Model.....17
2.4. Storage System.....18
**3. LOAD MODEL.....21**
**4. DISTRIBUTION SYSTEM RELIABILITY….....…….…….....23**
4.1. Radial Distribution Systems.....……...23
4.2. Reliability Modeling And Evaluation For Distribution System.....……..25
**5. RELIABILITY INDICES.....27**
5.1. Average Failure Rate Time.....27
5.2. Average Interruption Time.....27
5.3. System Average Interruption Frequency Index.....27
5.4. System Average Interruption Duration Index.....28
5.5. Expected Energy Not Supplied.....28
**6. MONTE CARLO SIMULATION.....29**
**7. SIMULATION PROCEDURE…….…….....31**
**8. CASE STUDY.....35**
**9. CONCLUSION.....49**
**10. FUTURE WORK.....53**
**REFERENCE…….…….....55**
**CURRICULUM VITAE.....59**

## ABBREVIATIONS

| | |
|---|---|
| **MCS** | **:** Monte Carlo Simulation |
| **PV** | **:** Photovoltaic |
| **WT** | **:** Wind Turbine |
| **GT** | **:** Gas Turbine |
| **RDG** | **:** Renewable Distributed Generation |
| **SAIDI** | **:** System Average Interruption Duration Index |
| **SAIFI** | **:** System Average Interruption Frequency Index |
| **EENS** | **:** Expected Energy Not Supplied |

**LIST OF FIGURE**

**Page**

**Figure 1.1:** Power System Division to Three Functional Area……5
**Figure 1.2:** Distribution Network for RBTS Bus 2.....8
**Figure 2.1:** The Hourly Output Power of PV.....13
**Figure 2.2:** PV Efficiency vs. Sunlight Intensity.....14
**Figure 2.3:** Wind Turbine Power Curve.....16
**Figure 2.4:** Hourly Output Power of Wind Turbine in a Year.....17
**Figure 2.5:** The Daily Generation Profile of Distributed Gas Turbine.....18
**Figure 2.6:** Hourly Charge and Discharge Profile of the Storage.....19
**Figure 3.1:** Monthly Weight Factor.....22
**Figure 3.2:** Hourly Weight Factor.....22
**Figure 4.1:** Example of a radial distribution network with disconnection on the main line…….....24
**Figure 6.1:** Element Operating/Repair History.....30
**Figure 7.1:** Flowchart of Distribution System Reliability Evaluation Without Set of DGs……33
**Figure 7.2:** Flowchart of Distribution System Reliability Evaluation with Set of DGs.....34
**Figure 8.1:** Distribution System for RBTS Bus 2 Containing DGs in F1, F2, F3, F4.....35
**Figure 8.2:** Distribution System for RBTS Bus 2 Containing DGs in F1, F2…….....36
**Figure 8.3:** Failure Rate of All Load Points.....41
**Figure 8.4:** Average Interruption Time of All Load Points.....42
**Figure 8.5:** Average Interruption Energy of All Load Points.....43
**Figure 8.6:** Failure Rate of All Load Points.....44
**Figure 8.7:** Average Interruption Time of All Load Points.....44
**Figure 8.8:** Average Interruption Energy of All Load Points.....45
**Figure 8.9:** Failure Rate of All Load Points.....45
**Figure 8.10:** Average Interruption Time of All Load Points.....46
**Figure 8.11** Average Interruption Energy of All Load Points.....46

**LIST OF TABLES**

**Page**

**Table 4.1:** Typical customer unavailability statistics……21
**Table 8.1:** Feeder Lengths.....37
**Table 8.2:** Load Points Data….....37
**Table 8.3:** Reliability Indices of Distribution Elements.....37
**Table 8.4:** The Monthly Light Intensity.....38
**Table 8.5:** The Wind Velocity and Wind Turbine Data….....38
**Table 8.6:** Reliability Indices of RBTS Bus2.....47
**Table 8.7:** Variance of Reliability Indices of RBTS BUS2…….....…...47
**Table 8.8:** Standard Deviation of Reliability Indices of RBTS BUS2…….....47

**IMPACTS OF DISTRIBUTED GENERATION ON DISTRIBUTION SYSTEM REALIABILITY**

## SUMMARY

A stable and reliable electric power supply system is an inevitable pre-requisite for the technological and economic growth of any nation. Due to this, utilities must strive and ensure that the customer's reliability requirements are met and the regulators requirements satisfied at the lowest possible cost. It is known fact around the world that 90% of the of the customer service interruptions are caused due to failure in distribution system. The electric utility company will strive to achieve this objective via many different means, one of which is to defer the capital distribution facility requirements in favor of a renewable distributed generation solution by an independent power producer to meet the growing customer load demand. The evaluation of reliability of distribution networks including renewable and non-renewable distributed generations, is presented in this master thesis. The Monte Carlo simulation algorithm is applied to a test network. The network includes three types of distributed energy resources solar photovoltaic (PV), wind turbine (WT) and gas turbine (GT). In order to make the study more realistic, an stochastich model for the renewable sources has been developed. PV and WT stochastic models have been used to simulate the randomness of these resources. Wind velocity and sunlight intensity are those important paramteres that are variable of time and in this master thesis for wind velocity weibull distribution and for the sunlight insolation normal distribution have appiled to measure their uncertainity. This study shows that the implementation of distributed generations can improve the reliability of the distribution networks. Modeling of DGs in reliability assessment and computing of related indices such as SAIFI, SAIDI is introduced. Using model development and case studies it is discussed and shown that location and numbers of DGs effect in distribution reliability indices. Finally, analysis results demonstrates that DG has the ability of improving the reliability of system and customer.

# DAĞITIK GUÇ ÜRETİMİNİN ELEKTRİK DAGITIM SİSTEMLERİNİN GÜVENİLİRLİĞİ ÜZERİNDE ETKİSİ

## ÖZET

Sabit ve güvenilir bir elektrik enerjisini sağlayan sistem, bir ulusun ekonomik ve teknolojik anlamda büyümesi için kaçınılmaz bir önkoşuldur. Buna bağlı olarak, kamu kuruluşlarının, müşterilerin güvenlik ihtiyaçlarını karşılamaya ve milletvekillerinin de gereken maliyetleri mümkün olduğu kadar en alt seviyeye düşürmeleri gerekmektedir. Dünya üzerinde müşteri hizmetlerine gelen şikâyetlerin %90'ı dağıtım kaynağındaki sorunlardan kaynaklanmaktadır. Elektrik firması bu amacı sağlamak için izlediği farklı yollar vardır. Bu yollardan biri, Sermaye üretim merkezi, dağıtılmış enerji üretim sistem çözümü yoluyla bağımsız bir enerji üreticisi tarafından artmakta olan müşteri taleplerini karşılamaktır. Bu yöntemin kullanılması elektrik enerjisini sağlayabilmek için dünyada bir alternatif olan tanımlanabilir. Küçük üretim birimlerinin, alt enerji iletim ve taşıma sistemine bağlı olarak kullanılması, özellikle elektrik enerji taşıma sisteminin eksik kaldığı yerlerde tüketici ve kamu hizmetler için yararlı olabilir. Ancak sistemin planlanması ve işleyiş sürecinde belirsizlikler "enerji üretim dağıtımı" ile daha büyük hal alıyor. Enerji üretim dağıtımının, elektrik sisteminin güvenirliği üzere olan etkisi esas olarak iki faktöre bağlıdır, birincisi "İşletmeye hazır DG sistemi ve onun sisteme olan bağlantı amacı", ikincisi "Enerji kaynağı DG birimine bağlıdır".

Rüzgâr ve güneş enerjisi gibi kesik kesik olan ve depolanmayan enerji kaynaklarına bağlı olan birimler için daha karmaşık bir model gerekir. DG'nin kullanılamazlığı enerji eksikliği, birimlerin jeneratör arızası veya mevcut enerjinin yetersizliğinden kaynaklanmıştır. Enerji modelinin kullanılması enerji modelinin kullanımı normalde enerji girişinin ölçümleri ( rüzgâr hızı, güneş ışığı ) zaman sürecinde analiz edilmesi gerekmektedir.

Ağ dağıtım güvenirliliğini, yenilenebilir enerji üretim dağıtımı incelemek, bu yüksek lisans tez çalışmasında sunulmuştur. Güç sisteminin güvenirliği iki yöntemle ölçülür: Birincisi, karmaşık bir sistem durumunda, matematiksel bir dizi hesaplarla analiz yöntemdir. Monto Carlo simülasyonu (MCS) dağıtım şebekesinin güvenirliğini, yenilenebilir DG üretimin değerlendirebilmek için önerilmiştir. MCS güç sistem çalışmalarında yaygın bir şekilde kullanılmaktadır, örneğin, olasılıklı güç akışı, ekonomik dağıtım ve güvenirlik değerlendirilmesi. MCS'e dayalı dağıtım sisteminin güvenirliği karmaşık ve doğrusal olmayan sistemlerde fazlasıyla kullanışlıdır. Bu metot analitik metoduna göre yük noktası ve sistem güvenirliği hakkında daha fazla bilgi veriyor. Rüzgâr turbonu ve fotovoltaikin çıkış gücünün belirsizliği nedeniyle bir sistemin güvenirliğini analitik metoduyla anlatmak pek kolay değildir. WT ve PV'nin çıkış

gücünü istenilen zamanda çok sayıda yöntemle tahmin edilebilir ancak MCS metoduyla, analitik metodun karmaşıklığının önüne geçebiliyoruz.
RBTS bir dağıtım sistemi olarak tezimizdeki metodolojiyi test etmek için yenilenebilir dağıtım sistemi içermektedir.

Yeniden özetlemek gerekirse, bu tez çalışmasında üretimin dağıtımı, depolama sistemi ve geleneksel üretimi, dağıtım şebekesinin üzere okuma yapılmıştır. PV ve WT üretim sistemleri dâhil olmak üzere, dağıtım şebekesinin güvenliğini ölçmek için stokastik (bandom) modelini kullandığımızda belirsizlikler doğruyor.

Bu nedenle MCS, şebekeyi test etmek için uygulanmıştır. Şebeke(ağ), üç tür dağıtım enerji kaynağından oluşmaktadır: Güneş fotovoltaik (PV), rüzgâr turbonu (WT) ve gaz turbonu (GT). PV ve WT stokastik modelleri rastgele tahminler doğrultusunda kullanılmıştır.

Üretim dağıtım sistemini test edip daha iyi bir sonuç almak için, farklı durum ve konfigürasyonlar tanımlanmıştır, örneğin DG'nin dört besleyicideki yerleşimi, DG'nin iki iki besleyicideki yerleşimi ve ayrıca iki farklı besleyicinin iki farklı bölümünde sürdürmek.

Bu çalışma üretim dağıtım sisteminin uygulanmasıyla dağıtım sistemin güvenirliğini arttırabileceğimizi öne sürüyor. DG modelinin güvenlilik değerlendirilmesi ve ilişkin indeksleri örneğin, SAIFI, SAIDI hesaplamak için tanımlanmıştır. Geliştirilmiş bir model kullanımı ve örnek çalışmalar DG'nin dağıtım güvenlik indekslerinde etkisi değerlendirilip gösterilmiştir. Son olarak analizin sonucu gösteriyor ki DG, sistem ve müşteri güvenliğini arttıran yeteneğe sahiptir.

Bu çalışmada, test dağıtım ağı üzerinde güvenilirlik değerlendirmesi yapılmıştır. Bu degerlendirmede RBTS Bus2 verisi kullanılmıştır, çünkü başarısızlık oranı ve ortalama yeniden yapılandırma süreleri ve devreleri, dönüştürücüler ve kırıcılar gibi her dağıtım bileşeni üzerine çok detaylı bilgi sunmaktadır. Orijinal RBTS Bus2 dağıtılmış enerji içermediğinden, sistem, PV, WT veDGT'lere modifiye edilmiştir. Rastlantısal çıktı üretimi olan PV veWT'yi içeren dağıtım ağlarının değerlendirmesinde, olasılık tekniklerinin kullanılması gerekmektedir. Bu amaç için Monte Carlo Simülasyonu cok kullanışlıdır, sistem bileşenlerinin yapay gecmişini oluşturmak için sadece temel bilgilere ihtiyaç duyar. Sistem öğesinde büyük ve rastgele sayılar ve senaryolar oluşturularak, frekanslar ve her yükleme noktasındaki kesinti süreleri hesaplanarak hata payı ve ortalama yeniden yapılandırma süresi kolayca bulunabilir.

SAIFI ve SAIDI ve EENS gibi ortak indeksleri dağıtım şebekesi değerlendirilnesi için DG lersiz olarak 7 durumda ve DG toplulukları rezervasyon sistemle muhasebe edilir .Bu 7 durumda besleyicilerin uzunluğuna artırdığımız gibi bu sonuçtan besleyici uazunluğun çoğaltılmasıyla hız miktarının kırılmasını ve diğer indekslerin geçerliliklerinin artmasını anlamış olduk . SAIFI,SAIDI ve EENS % 30.1, 15.5 ve 19.8

,e kadar çoğalmışlardır . ikinci durumda bir DG topluluğuyla SAIFI,SAIDI ve EENS sırasıyla % 27.1 , 5.8 ve 6.3 seviyede iyileşmişlerdir . Dördüncü durumda ise SAIFI,SAIDI ve EENS rezervasyonu sırasıyla % 32.4, 7.6 ve 8.1 seviyede çoğalmışlar, 3.durumda da iki DG topluluğuyla SAIFI,SAIDI ve EENS sırasıyla % 16.2, 3.4 ve 3.8 seviyede iyileşmiş ve 5. Durumda da SAIFI,SAIDI ve EENS rezervasyonu sırasıyla % 21.1, 5.7 ve 6.2 kadar artmıştır .

Bu mutalaa, geniş çaplı üretimlerin uygulanması dağıtım şebekerinin geçerliliğini iyileşlirilmesini gösteriyor. DG,lerin stimülasyonu geçerliliğin değerlendirilmesi ve SAIFI,SAIDI gibi ilgili indekslerin muhasebesinde veriliyor .

Bu durum model gelimesinden ve konulu mutalaalardan kullanmakla sözkonusu oluyor . ve DG,lerin konumu ve sayısının dağıtım geçerliliği indeksleri üzerinde etkili oluyor . Nihayette de irdeleme ve analiz sonuçları DG,nin sistem geçerliliğinin ve müşterinin değerini çoğaltma gücünü ispat ediyor .

Tekrar etmek gerekirse, normal dağıtım kullanan PV stokastik modeli güneş yalıtımındaki kesintileri simüle etmek için geliştirilmiştir. 2 parametreli Weibull dağıtımı, rüzgar hızının rastlantısallığını simüleetmeki çin WT çıkış gücü modeli ile kullanılmak için önerildi. DGT modeli zirvedeki yüklemenin tedariği için geliştirilmiştir. Hata payı ve ortalama yenileme zamanı tüm dağıtılmış enerji kaynaklarına dagitilmis ve bu göstergeler güvenilirlik için kayda alınmıştır. SAIFI, SAIDI ve EENS gibi göstergeler, mikrogritli, mikrogritsiz ve depolama sisteminde olmak üzere 3 vakada dağıtım ağının güvenilirliğini değerlendirmek için hesaplanmıştır.

## 1.INTRODUCTION

Many researchers and students in the field of power engineering have become motivated in the implementation of renewable energy resources in power networks recently. This motivation and intention has influenced by environmental issues and increasing fossil fuel prices which is one the human concern in the 21$^{th}$ century, because greenhouse gas emissions are the main causes of global warming entire the world, using technologies that do not produce Carbon Dioxide emissions would naturally eliminate their effects. The increased prices of fossil fuel have made renewable resources more competitive in the market and it have encouraged more technologies and facilities to compete in the power market.

The resources of distributed energy take different forms such as wind, solar, geothermal, etc. The United States Department of Energy (DOE) has established a new project called SunShot. This project aims to reduce the solar energy cost by 75% by 2020. In addition, SunShot plans to extend the solar energy generation to reach 15-18 % of the United States' electricity generation capacity by 2030 [1]. In 2011, Germany's PV installed capacity reached about 24 gigawatts (GW) [2]. In 2011, Italy installed 9.3 GW of PV generation capacity which made it the top PV market in that year. Germany and Italy accounted for 59% of Global PV installed capacity. China reached its first GW of PV capacity by installing 2.21 GW in 2011 [3].

The topic of an ambitious plan which is supported by the United States government is “20 Percent Wind Energy by 2030 [4].In 2007, around 30% of the installed capacity in the United States was wind generations. China is hugely expanding its

wind generation capacity which reached 55 GW in 2010 [5]. Germany reached 30 GW of wind installed capacity generation in 2011[6]. In Spain, 1.5 GW of wind capacity were installed in 2010 and the total capacity has reached 20.55 GW [6].

## 1.1. DISTRIBUTED ENERGY RESOURCES

The use of DG can be defined as an alternative to expand the capacity of the electrical system supply is being considered around the world. The use of small generating units, connected in a dispersed way at distribution/sub-transmission systems, can bring benefits to consumers and utilities, especially in places where there is deficiency of the electric energy transport system. However, the uncertainties involved in the planning and operation of system become bigger with the presence of DG. The impact of DG on reliability of electric systems depends mainly on two aspects:

- The operational model of DG and the purpose of its connection to the system
- The energy source in which the DG unit is based

The source of energy including the DG is based has fundamental influence on system reliability. Those units that have based on non-intermittent and storable energy sources, such as oil and biomass, they can be more easily represented and used, since energy can always be considered available in reliability studies. The only issue in these units considered in the unavailability of generation that is the not scheduled failure of the generating unit, thus This kind of DG tends to be more reliable because of the source of energy that is applied.

Besides that, the units based on intermittent and not storable energy sources, such as wind and solar power, they certainly require more sophisticated model in reliability

studies, where the energy availability also needs to be represented. The unavailability of generation of DG can be caused by unavailability of energy, failure of unit generator or insufficient level of available energy. The availability model of energy normally requires an analysis of time series of measurements on the energy input (wind speed, sunlight, etc.). Then, the generation availability of DG must be modelled by the combination of the availability model of energy and the availability model of generators.

Recently, interest in using of renewable distributed generation (RDG) in improving power system reliability has grown enormously. This increasing interest has been motivated by the probable potential to use renewable resources to generate electricity in distribution networks on a small scale. What is important to know is that, mostly the power is generating with huge-scale power plants and it will be transported by the transmission lines and by the distribution networks it will deliver to end users. Centralized generation definition can be derived by the previous sentence. Another point deserving attention is that, there is another approach to deliver the electricity to the end user which named as decentralized generation or distributed generation is an approach in which customers or the utility company are using small scale generators on the low voltage networks. In the text below some of the advantages of using this technology in power systems have mentioned:

- Depletion in power losses which is caused by the power traveling through long transmission lines and high voltage transformers.
- Mitigating the congested transmission networks and decreasing the need to expand transmission network.

- Making a possible condition for consumers to have this chance to select the source of energy based on the awareness of the environmental issues and its cost.
- By using and providing an alternative source during power disturbance events, the reliability of the power service would be improved.

## 1.2. POWER SYSTEM RELIABILITY ANALYSIS

Power system reliability assessment is primarily focused on an analysis of the healthy and failure states of a power system. Power system reliability can be subdivided in two different categories [4].

Adequacy assessment takes into account the determination of sufficient facilities within the system in order to satisfy the customer load and with static conditions in the power system. Power system security has the goal to respond to disturbance arising within the system and as a result discusses with the dynamic conditions in the system.

A power system is a complex network, highly integrated and very large. The reliability evaluation of the entire configuration at a time is complex if it is considered the power systems as an entire entity. Although the complexity of evaluation, the need for reliability assessment is ever increasing and more utilities are investing time in reliability analysis. Thus, to decrease the complexity of an overall power system, there are methodology that consider on divide it to different part, as it shown in figure 1.1 there are three functional areas that they are grouped to form three hierarchical level (HL) for the purpose of reliability evaluations [5]. As it has shown in the figure 1.1 first level (HLI) refers to generation facilities and their ability to satisfy the demand of system. The second level (HLII) refer to the

both of generation and transmission systems and the ability to transfer energy to the bulk power point. Ultimately, the third level (HLIII) refer to the complete system including the distribution at the satisfaction of the demand of individual costumer.

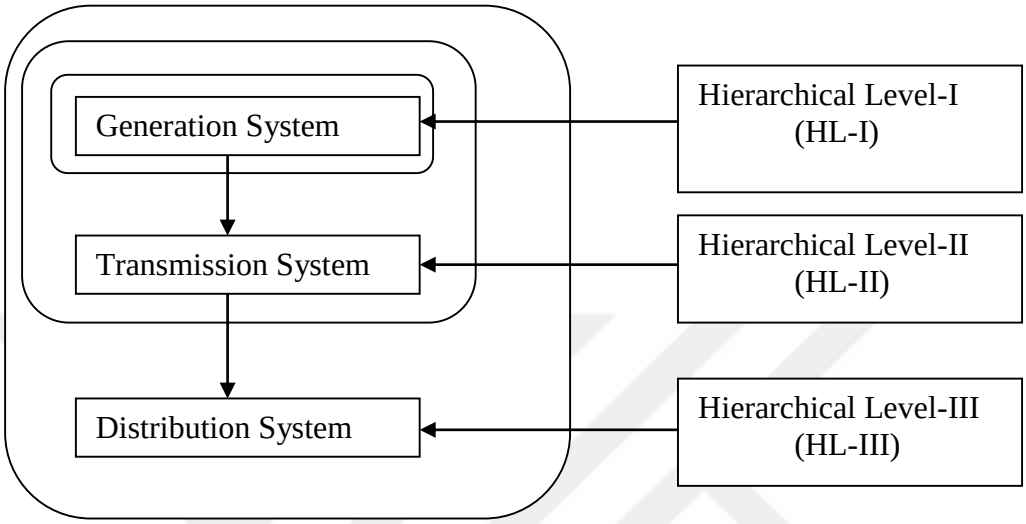


**Figure 1.1** Power System Division to Three functional area.

## 1.3. OBJECTIVE

It is very crucial for companies and consumers to know the level of reliability of power networks which there are involved with. Reliability science is an engineering that emphasizes dependability in the lifecycle management of a product. Dependability, or reliability, describes the ability of a system or component to function under stated conditions for a specified period of time. Reliability may also describe the ability to function at a specified moment or interval of time (Availability). Reliability engineering represents a sub-discipline within systems engineering. Reliability is theoretically defined as the probability of success (Reliability=1-Probability of Failure), as the frequency of failures; or in terms of availability, as a probability derived from reliability, testability and maintainability. Testability, Maintainability and maintenance are often defined as a

part of "reliability engineering" in Reliability Programs. Reliability plays a key role in the cost-effectiveness of systems [8].

Most power companies operate their generation and transmission equipment in N-1 or N-2 criterion [9]. It can be understood that in case one piece of transmission equipment (transformer, lines, reactor, etc) or generator goes out of operation in N-1 criterion, the tolerance of system is enough good to handle this outage without any shortage in delivery of power to the end users. It is very important to have an additional capacity in transmission and generation because a shortage of the capacity or failure in these parts of the network can affect large numbers of customers. Due to the fact that distribution circuits are long and the large number of transformers in this part of the network are in contrast to transmission network, N-0 criterion is widely practiced in radial low voltage distribution networks. As a result, power network will be interrupted while any of the main of distribution network components failed. That is why a lot of researchers paying attention to the reliability evaluation of distribution networks [10], [33].

There are two main techniques to evaluate the reliability of power systems. The first is the analytical technique which requires a series of mathematical calculations with an approximation in the case of a complex system. Monte Carlo Simulation has been applied in this master thesis in order to evaluate of the reliability of the distribution network in different cases of distributed generations allocation. The Monte Carlo Simulation has been applied in many researches and project relevant to power system studies such as economic dispatch, probabilistic power flow and reliability evaluations [12], [13].

Evaluation of distribution system reliability based on Monte Carlo Simulation is one the well-known method in complex non-linear systems. This technique and method

gets more information on the load point and system reliability index in comparison to the other method which is analytical method. Because of the uncertainty of both wind turbine and photovoltaic output power, it is not easy to use the analytical method to evaluate the reliability of a system compromising these recourses. However, the output power of WT and PV can be predicted by generating a large number of scenarios in desired time. Therefore, by applying MCS to simulate the output power of Wind Turbine and Photo Voltaic could be used to facing with complexities of another method which is analytical method.

A distribution system for RBTS Bus 2 containing renewable distributed generation is used to test the methodology used in this research. In order to make it easier in coding, the sections have been relabeled. Figure 1.2 shows the distribution system for RBTS Bus 2.

What is mainly has been focused in this master thesis is that study the impact of placing distributed generations, storage systems on the reliability of distribution network. In the context of next sections, the type and placement of distributed generations has been detailed. In order to analysis of the evaluation of distribution network reliability comprising Photovoltaic and Wind Turbine generations, there must be a model to deal with the uncertainty of these resources and in this master thesis normal distribution probability for sunlight intensity uncertainty and Weibull distribution model for wind uncertainty have been developed.

## 1.4. LITERATURE REVIEW

There are several test network systems to use for research in distribution system reliability assessment, one the most well-known test system was developed by Billinton, et al. [14] which is a reliability test system for educational purposes and

is called Roy Billiton Test System and is abbreviated as RBTS. The RBTS contains 5 busbars (Bus2-Bus6) [15]. Bus2 and Bus4 are the ones widely used in

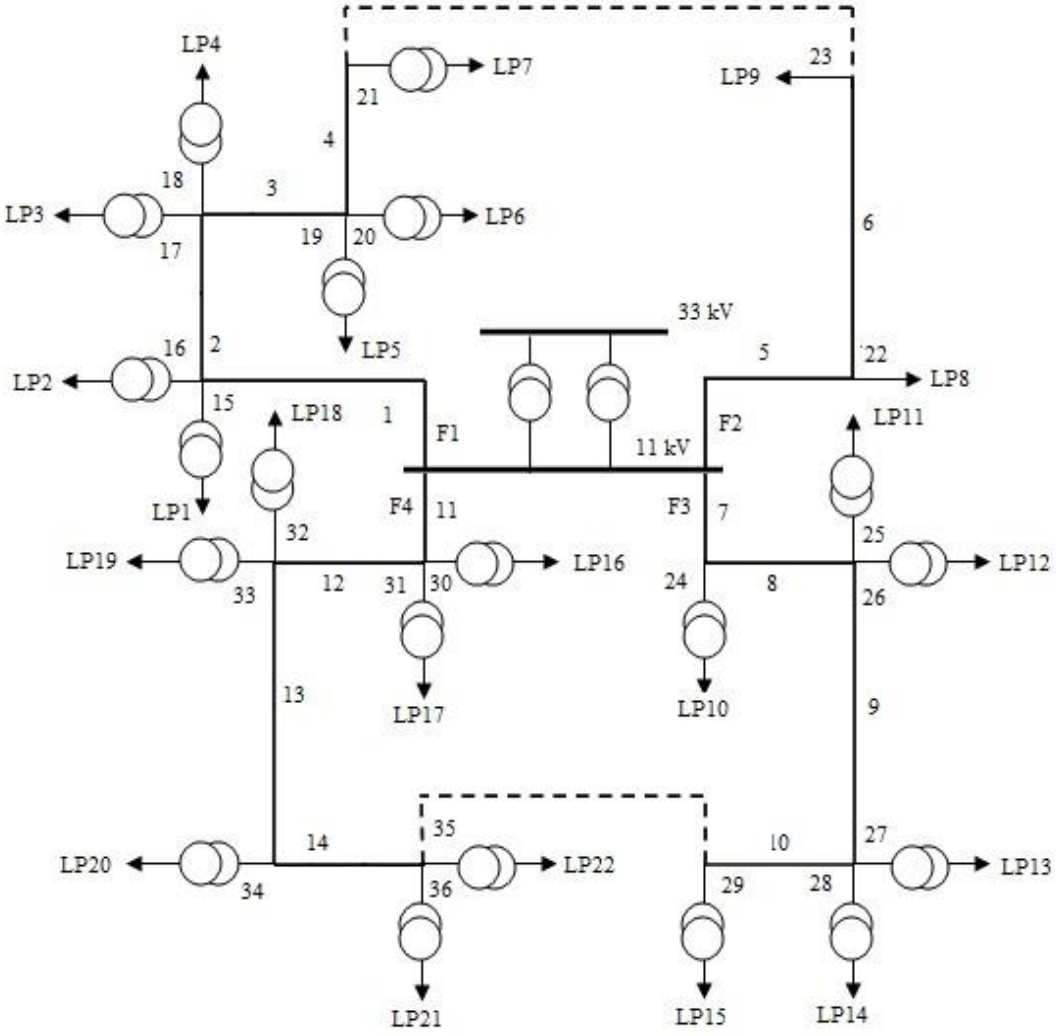


**Figure 1.2** Distribution Network for RBTS Bus 2.

evaluation of distribution networks reliability since they offer detailed information on

- The meteorological data of Kermanshah province in Iran has been collected and compared with the results that were obtained from the model which has proven that the variance of the output power obeys a normal distribution. For developing a reliability model for a wind generator, the intermittency of the wind velocity should be considered in this model to get realistic results. Giorsetto and Utsurogi in [19] have developed a method to evaluate the effect of implementing wind turbine on the

reliability of the system. They have included the effects of forced outage of the wind turbine and the variable wind velocity on the overall reliability by using a probabilistic method. Wang, Dai and Thomas in [20] have studied the impact of wind turbine generators on the reliability of power systems and developed a model which deals with failure rate of the generators and the associated equipment with it such as DC/AC convertor. Weibull distribution is used to generate the hourly wind velocity. Karki, Hu and Billinton in [21] have taken into account geographical locations of the wind power generation when they developed their wind reliability model. ASD (Actual Statistical Data) has been compared with simulated data of wind speeds in different locations in Canada in which the final results have been close.

Billinton and Wang in [22] have developed an algorithm to evaluate the reliability using MCS to be used in complex distribution networks. The program has used on the distribution system of the RBTS, and the obtained results were very close to the analytical method. Reliability evaluation of distribution networks comprising RDG (renewable distributed generation) studied by Bea and Kim in two cases [10]. The load duration curve model was used in the one case and the peak load was used in a second case to investigate the impact of the load profile on system reliability. The results show that implementing load peak data in reliability studies would give misleading reliability indices. Huishi, Jian and Sige in [11] have investigated the impact of the distributed generations and storage systems on the distribution system reliability. In order to make the fluctuations of the output power of PV and WT, smoothly, a storage system model has been used.

## 2. DISTRIBUTED GENERATION MODELS

In this master thesis, impacts of distributed generations on a distribution system reliability have been developed. The reliability of distribution system in presence of renewable and non-renewable resources such as wind and solar energy was evaluated.

There are many techniques and methods to model different type of distributed generations and some them has mentioned in the introduction section of this desertion.

What is important to know that solar insolation and wind speeds are both intermittent because of their resources and as a result, the output powers of PV and WT systems are not deterministic and thus that would be the reason which require for a stochastic model to simulate Photovoltaic(PV) and Wind Turbine(WT) outputs. The definition of stochastic model is that a simulation in which based a technique to explain a non-deterministic behavior and the randomness properties of the system. The probability distribution, therefore, can be used to predict the output power of photovoltaic and wind turbine. In order to find statistical data of the wind speed and solar insolation, meteorological data of a variety of weather conditions at one location must be measured. In this desertion, the distribution system contains distributed gas turbines (DGT's). The output power of the DGT's is modeled. In order to decrease the peak load, storage systems needed and that is because of this fact that the peak of the output power of the PV's and the peak load do not occur at the same time in most load profiles.

## 2.1. PHOTOVOLTAIC OUTPUT POWER MODEL

It is worth mentioning that solar energy is presenting a quick growth and success usage. This is chiefly due to being a clean energy. However, like the wind, its availability may be lower due to the intermittency inherent to sunlight. For instance, in many of district, half the day there is little or even no generation because of variation of solar radiation. The solar radiation varies randomly depending on various aspects, like the weather being cloudy or not, the environmental conditions of the region, etc. In order to reduce this randomness, storage systems must be used to provide power at night, for example.

Insolation $I(t)$ or sunlight intensity and also solar panel area (S) have a fundamental effect on output power of a PV. As the sunlight is different from month to another month, the intensity of sunlight varies from month to month and its peak time is during the summer as shown in Figure 2.1 In this master thesis, we have used meteorological data of Kermanshah province in Iran. For the sake of the

simplicity, a simple model of PV is investigated in this research [27].

The output power of the PV system could be computed by the following equation [27]:

$$P_{out}=\begin{cases}\frac{\eta_c}{K} * S * I(t)^2 & 0 < I(t) \leq K \\ \eta_c * S * I(t) & I(t) > K\end{cases} \quad (1)$$

Where:
$\eta c$ is the efficiency of the PV system and $K$ is a threshold.

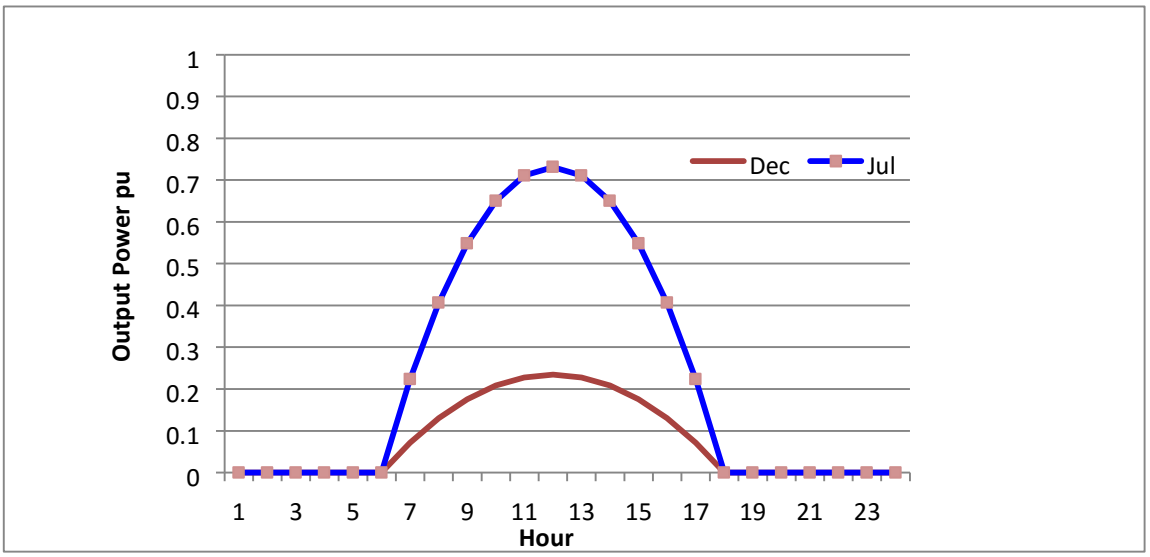


**Figure 2.1** Typical hourly output power of PV system.

The value of $n_c$ is not a constant when I(t) is less than or equal K . However, when I(t) exceeds K , $n_c$ is almost constant. Figure 2.2 shows the relation between I(t) and $n_c$. For a typical sunny day, the hourly solar insolation I(t) can be expressed by the following equation [11]:

$$I(t) = \begin{cases} I_{max}\left(\frac{1}{36}t^2 + \frac{2}{3}t\text{-}3\right) & 6 \leq t \leq 18 \\ 0 & 0 \leq t \leq 6 \text{ and } 18 \leq t \leq 24 \end{cases} \quad (2)$$

The solar insolation will be different for different atmospheric conditions such as many factors like clouds, temperature, and relative humidity. In order to reach the model of PV more realistic, a prediction technique must be applied. It has proven in studies that the variation of PV output power ($\Delta P_{out}$) follows a normal distribution [23].

Thus, normal distribution of $\Delta P_{out}$ could be expressed by the equation in below [23]:

$$f(\Delta P_{out}) = \frac{1}{\sqrt{2*\pi}} * \exp\left(-\frac{\Delta P_{out}^2}{2*\delta_{pv}^2}\right) \quad (3)$$

Where $\sigma_{PV}$ is the variance of output power of PV.

The forecasted output power of PV including Pout on a sunny day in addition to $\Delta$ Pout. As a result, the output of PV could be computed by the equation in below [23]:

$$P_{pv} = P_{out} + \Delta P_{out} \tag{4}$$

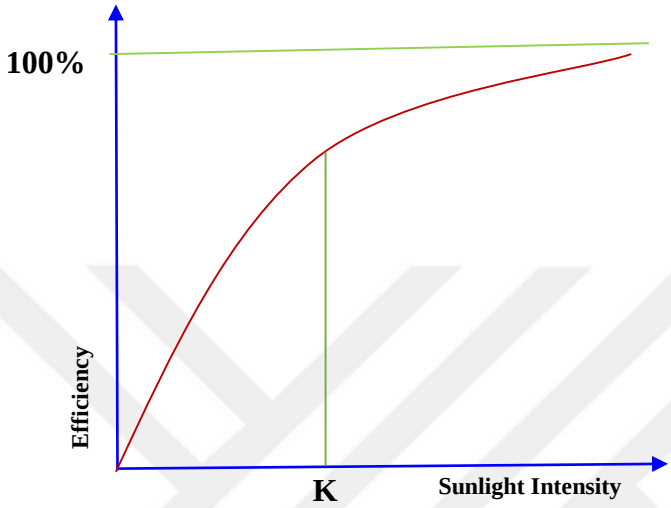


**Figure 2.2** PVefficiency vs. sunlight intensity.

## 2.2. WIND TURBINE OUTPUT POWER MODEL

Wind energy can be defined as the renewable energy source with the most successful exploration in the world today. However, even wind generation has disadvantages as a regular source of energy, and thus, it is considered less reliable than conventional sources. The daily amount of energy available can vary widely and its use is limited to places of high and relatively constant winds.

It is worth mentioning to pay attention to this point that the connection of a growing number of wind farms to the electrical systems implies in the need to study their effects. The operating characteristics of the wind farm, heavily dependent on the local regime of wind, imply that the conventional power plant stochastic model is inappropriate to be applied to it. The amount of output power of a wind turbine

chiefly depends on wind velocity. In the case that the velocity of wind is lower than the cut-in speed, there won't be appropriate power to run the power generation, and as a result the wind turbine will be turn off. In the case that wind velocity is between the cut-in and rated speed, the output power would be variable. If the wind velocity is between the rated and cut-on speed, the output power of the wind turbine will be constant amount. In the case of the velocity of wind would go upper cut-on speed, the wind turbine again will be tuned off and that's because of restriction in mechanical safety. Output power and wind velocity have relevancy to each other and its relationship is shown in Figure 2.3, and could be expressed as [19]:

$$f_{(x)} \begin{cases} 0 & 0 \leq V_t \leq V_{ci} \\ (A + B.V_t + C.V_t^2)P_r & V_{ci} \leq V_t \leq V_r \\ P_r & V_r < V_t \leq V_{co} \\ 0 & V_t > V_{co} \end{cases} \tag{5}$$

Where

$P_r$ rated power output

$V_{ci}$ cut-in wind speed

$V_r$ rated wind speed

$V_{co}$ cut-out wind speed

A, B, and C are constants, and can be calculated as functions of $V_{ci}$ and $V_r$ as [19]:

$$A = \frac{1}{(V_{ci}-V_r)^2}\left(V_{ci}(V_{ci} + V_r)-4V_{ci}V_r\left(\frac{V_{ci}-V_r}{2V_r}\right)^3\right) \tag{6}$$

$$B = \frac{1}{(V_{ci}-V_r)^2}\left(4(V_{ci} + V_r)\left(\frac{V_{ci}+V_r}{2V_r}\right)^3 - (3V_{ci} + V_r)\right) \tag{7}$$

$$C = \frac{1}{(v_{ci}-V_r)^2}\left(2-4\left(\frac{4*V_{ci}+V_r}{2V_r}\right)^3\right) \tag{8}$$

Wind speed by its nature is intermittent, and it can impact in variations in output power. As a result, a probabilistic method and technique must be applied to simulate

its uncertainty. Probability distribution of wind speed follows a Weibull distribution in according to statistical data [24], [25]. The probability density

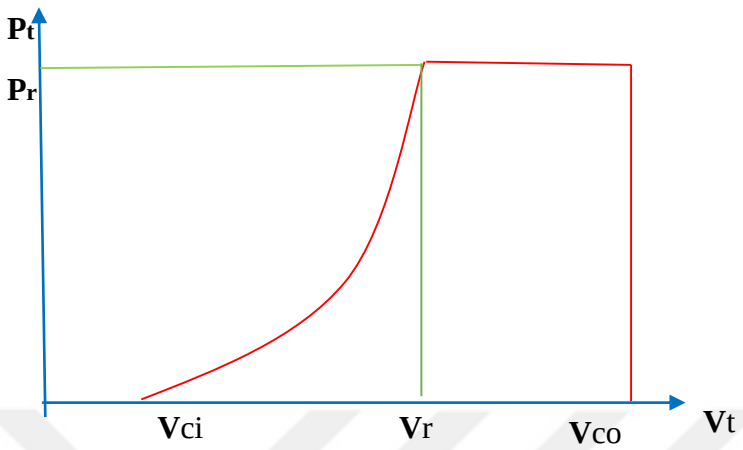


**Figure 2.3** Wind turbine power curve.

function of a two parameter Weibull distribution is given as [26]:

$$f_{(v)} = \frac{k}{c}\left(\frac{v}{c}\right)^{k-1}\exp\left[-\left(\frac{v}{c}\right)^{k}\right] \tag{9}$$

Where

V wind speed

c scale parameter

k shape parameter

Two paramaters of c and k could be explained as functions of average (μ) and standard deviation (σ) of wind velocity. In order to get the shape parameter, a technique with an approximation was applied [4]. k could be computed by the equation in below [26]:

$$k = \left(\frac{\sigma}{\mu}\right)^{-1.086} \tag{10}$$

After finding *k,c* can be calculated by the following equation [26]:

$$c = \frac{\mu}{r\left(1+\frac{1}{k}\right)} \tag{11}$$

Since the Weibull probability function of the wind speed is very sensitive to any change in c and k, statistical data of the wind speed at the desired location should be collected for several years. As far as Kermanshah province is a windy location in Iran we have been used it meteorological data in this master thesis for the calculation. The hourly output power of the wind turbine model in one year is shown in Figure 2.4. It is observed that the output power of the wind turbine is variable throughout the year.

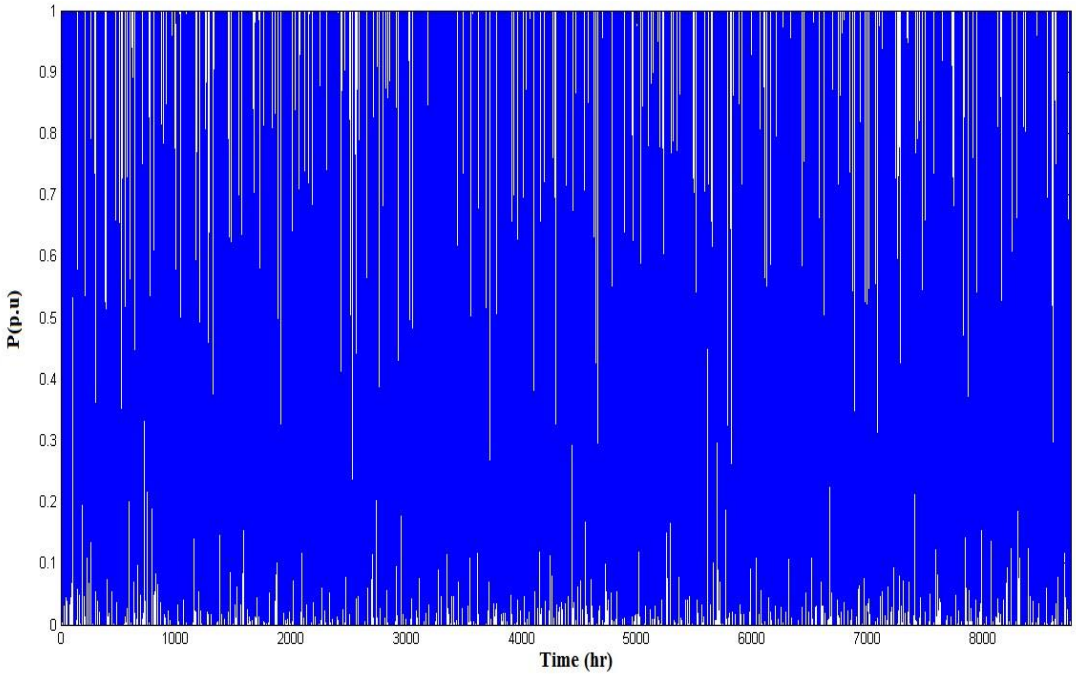


**Figure 2.4** hourly output power of wind turbine in a year.

## 2.3. GAS TURBINE OUTPUT POWER MODEL

In Distribution system, Gas turbine generators (GT's) have been using pervasively. In many cases, gas turbines would be applied as a back-up source, especially in those cases with crucial loads or GT’s are in cooperated along with the main grid in order to supply and support the load during the peak time. Gas turbines have good reputation in terms of reliability and known as a very reliable source of energy with very low amount failure rates. Its output power is predictable. As a result,

developing an output power model of gas turbine is simple and depends on the operation hours. It has assumed in this master thesis that GTs operates for 5 hours in normal conditions, or when there is a shortage from the main grid. What have assumed in this master thesis that the peak load time occurs between 4:00 pm and 8:00 pm based on the load profile, which will be demonstrated in Section 3. Figure 2.5 has shown the gas turbine generation profile.

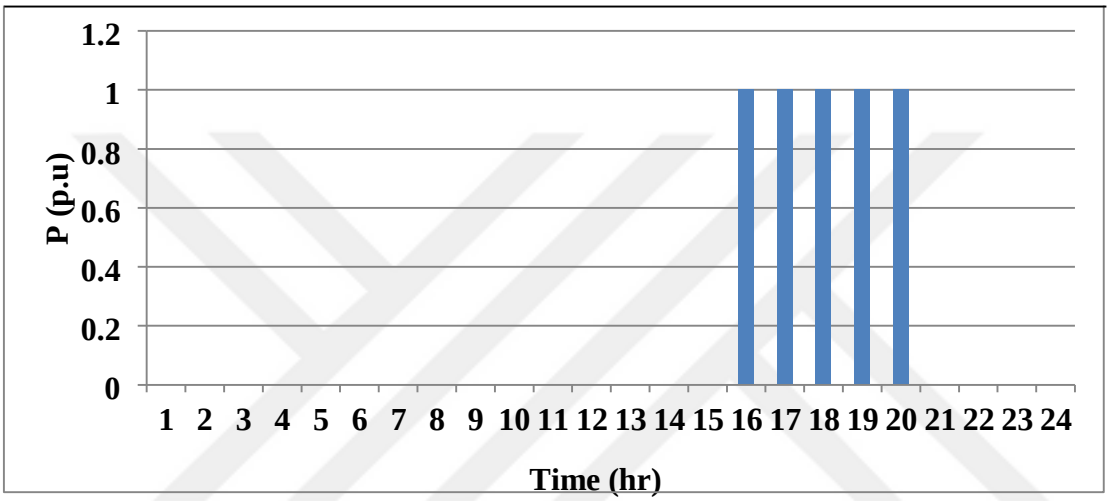


**Figure 2.5** The daily generation profile of distributed gas turbine.

## 2.4. STORAGE SYSTEM

Mostly, storage system would be applied along with a photovoltaic unit in order to smooth the fluctuation of the output power of PV and shave the peak load with decreasing the demand. The battery storage also could be used as a backup along with the distributed energy resources when the main source is not available by any probable failure on the system. What have applied in this master thesis as storage system is a generic battery storage system which serves the main purpose of this study. [33]

The capacity of battery system and the capacity of converter are 0.85 MWh and 0.4 MW respectively. In the figure 2.6 it shows the hourly charge and discharge profile of the battery. By having a look to the figure 2.6 it can be derived that on the basis of load profile from 2:00 am to 6:00 am, the storage draws 0.15 MW continuously to charge the batteries since that time interval assumed to be off- peak and from time interval of 4:00 pm to 8:00 pm assumed as peak time, the battery storage has been discharged in order to supply the load during, because of lack sunlight and thus there is no output power of the PV during the night, the storage battery will be charged by the main grid. During interruptions in the power network, the load can draw up to 0.4 MWh of energy in 2.5 hours if the battery is fully charged.

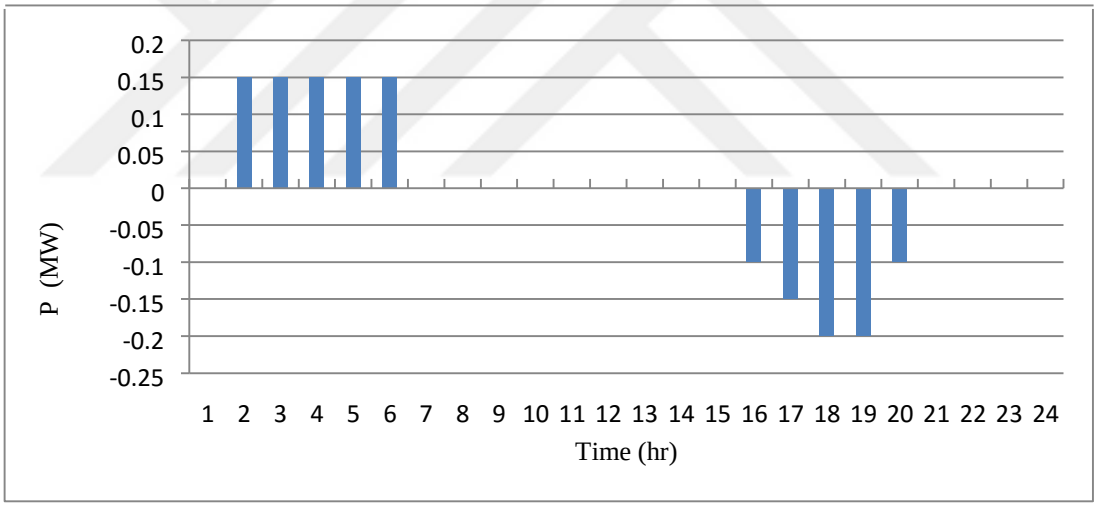


**Figure 2.6** Hourly charge and discharge profile of the storage (P>0 charging and P<0 discharging)

# 3. LOAD MODEL

Load could be affected by weather conditions and seasonal events and depend on the geographical location. What can be named as a good fortune is that most of these events will be happen at the same time each year. As a result, the power system loads behavior is a frequent pattern in normal conditions in each year. Thus, in order to construct a load, model this pattern could be used to predict the probable load. A load model that is time varying could be achieved by applying historical data that can be build up by monthly and hourly weight factor. Figures 3.1 and 3.2 show monthly and hourly weight factors [28]. Equation (12) could be applied to find the predicted load for load point i at any desired time.

$$P_{(i)}(t) = W_h(h)*W_m(m)*P_{li} \tag{12}$$

Where

$w_h(h)$ hourly weight factor

$w_m(m)$ monthly weight factor

$P_{Li}$ peak load for load point i

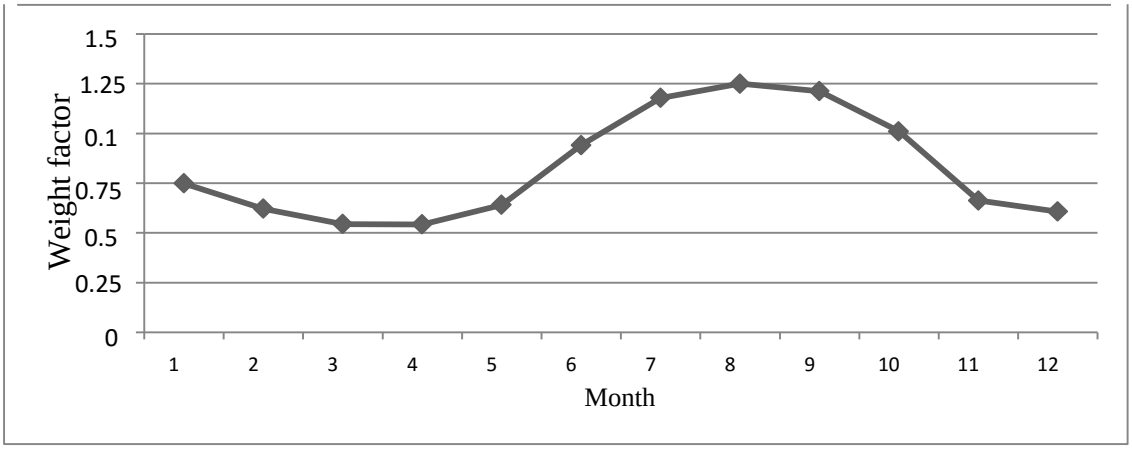


**Figure 3.1** Monthly weight factor.

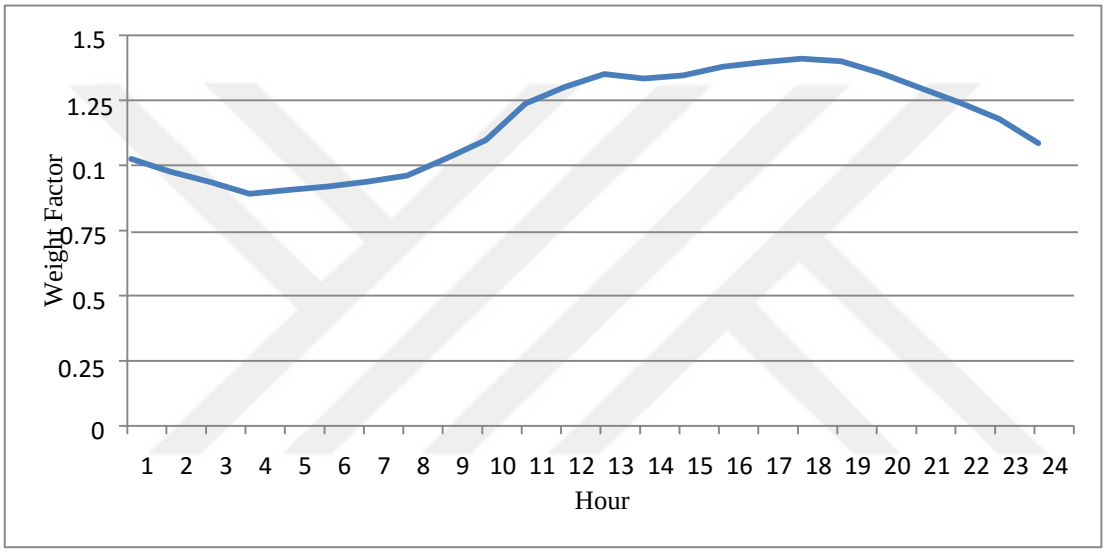


**Figure 3.2** Hourly weight factor.

# 4. DISTRIBUTION SYSTEM RELIABILITY

Within the few past decades distribution systems have got less attentions with focus to the reliability modeling and evaluation of the generation system, A distribution system is cheap and the outages have a very localized effect. However, in according to evidences, the statistics have shown that failures in distribution systems contribute as much as 85% towards the unavailability of supply to a load with a quick comparison with other parts of electric power systems as shown in Table 4.1

**Table 4.1:** Typical customer unavailability statistics. [28]

| Contributor | minutes | % |
|---|---|---|
| Generation Transmission | 0.5 | 0.5 |
| 132 KV | 2.3 | 2.4 |
| 66K and 22KV | 8 | 8.3 |
| 11 and 6.6KV | 58.8 | 60.7 |
| Low voltage | 11.5 | 11.9 |
| Arranged shutdowns | 15.7 | 16.2 |
| **Total** | **96.8** | **100** |

## 4.1 RADIAL DISTRIBUTION SYSTEMS

Usually, distribution systems are radial in order to being more simple and less costly, as a result it makes systems makes it more vulnerable to outage in comparison to a meshed network. There are many other systems that are operated as single radial feeders systems by using normally open point in the mesh. It would decrease the amount of equipment and facility exposed to a single component failure, same as the

test roy bilington test system that is used in this master thesis. Usually, radial distribution system has disconnection on the main line and if any section on the main distribution line fail, it could impact in power outage for all the distribution lateral, in another definition, there are circuit breakers along them in the system. Another point deserving attention is that, without disconnect on the main line in a system, placing a distributed generation won't enhance the system reliability since a failed section on the main line will not be isolated, as is shown in [14]. Figure 4.1, show an example of a radial distribution network with disconnection on the main line.

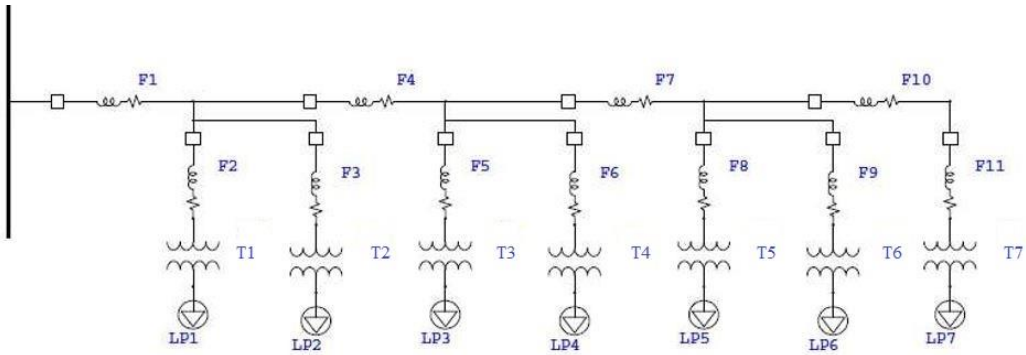


**Figure 4.1:** Example of a radial distribution network with disconnection on the main line [14].

In this master thesis, a radial distribution system has used for the study case. As the objectives is to study impacts of DG on distribution system reliability, the maximum benefits of DG are obtained in completely radial where some components have great influence to entire system. In the next section, modeling and evaluation of a disitrubtion system explained and it givevs general idea about the modeling and reliability calculation of distribution system.

## 4.2. RELIABILITY MODELING AND EVALUATION FOR DISTRIBUTION SYSTEMS

The techniques needed to analyze a distribution system depend on type of system being considered and the death of the analysis. This section is concern to the basic evaluation techniques. There are more than satisfactory for the analysis of distributed radial systems. More complex techniques are needed for meshed networks or composite systems.

Two well-known methods are concerned, analytical methods and Monte Carlo simulation have been extensively used for HL-I reliability evaluation. Similar techniques have been applied to HL-II evaluation and to HL-III. As mentioned before the project point of view is from HL-III., which includes generation transmission and distribution systems. However, distribution system reliability studies are normally performed assuming the generation and transmission systems points have unlimited capacity and 100% of reliability. [11].

While we are talking about distribution systems, they are most probably radial or slightly meshed [6]. Radial distributed system comprising a series of components, including lines, cable, isolators, bus bars. All the end users are connected to any load point as like systems needs all the components between itself and the supply point in order to be operating.

# 5. RELIABILITY INDICES

Usually, forced interruptions play a pivotal role evaluation of reliability and they must be considered in the calculation. These forced interruptions happen because of the failure of network components in a system. In this master thesis, some of common index are used in order to evaluation of the reliability of power networks which comprise SAIFI, SAIDI, and EENS. The definition of these indices has detailed in following sentences and explained as well.

## 5.1. FAILURE RATE

The failure rate λ is defined as the probability of failure occurrence during a specific period for load point [29], which can be given by

$$\lambda = \sum_{i=1}^{n} \lambda_i \tag{13}$$

Where $\lambda_i$is the failure rate of the series components from the source point to load point.

## 5.2. AVERAGE INTERRUPTION TIME

The average interruption time $U$ is defined as the average interruption time of load point in a specific period [29], which can be expressed as:

$$U = \sum_{i}^{n} \lambda_i r_i \tag{14}$$

Where $r_i$ is average restoration time of network component *i*.

## 5.3. SYSTEM AVERAGE INTERRUPTION FREQUENCY INDEX

SAIFI measures the number of permanent interruption that customers would experience in one year [29], which can be calculated by Eq. (15).

$$\mathrm{SAIFI} = \frac{\sum_{i=1}^{n} \lambda_i N_i}{\sum_{i=1}^{n} N_i} \tag{15}$$

Where $N_i$is number of customers per load point.

## 5.4. SYSTEM AVERAGE INTERRUPTION DURATION INDEX

SAIDI measures the duration of permanent interruption that customers would experience in one year [29], which can be calculated by the following equation:

$$\mathrm{SAIDI} = \frac{\sum_{i=1}^{n} U_i N_i}{\sum_{i=1}^{n} N_i} \tag{16}$$

## 5.5. EXPECTED ENERGY NOT SUPPLIED

EENS measures the total of energy interruption that customers would experience in one year [29]. It can be calculated by Equation (17).

$$\mathrm{EENS} = \sum_{i=1}^{n} E_i \tag{17}$$

Where $E_i$ is the average of average interruption energy per load point.

# 6. MONTE CARLO SIMULATION

With respect this truth that failures in power systems are random in nature, Monte Carlo Simulation could be used to simulate these failures. Monte Carlo Simulation is a probabilistic method and it could be applied in order to expect the system components behavior. One of the well-known and pervasive use of Monte Carlo Simulation is Time sequential simulation which is used whenever the behavior of system depends on past events.

In this method, an artificial history is required in time sequential simulation, and that can be achieved by generating the up and down times randomly for the system components. Time to failure (TTF) is the duration that it would take the component to fail. This time is predicted randomly by the following equation [29]:

$$TTF = -\frac{1}{\lambda}\, In(n) \tag{18}$$

Where λ is failure rate of system component and *n* is a random number (range from 0 to 1).

The definition of time to repair (TTR) or time to replace (TTR) is that the period of time that is needed in order to repair or replace a failed component in a network. This time is also can be randomly computed with equation in below [29]:

$$TTF = \frac{1}{\mu}\, In(n) \tag{19}$$

Where *m* is repair rate of system component.

By having a look to equations (18) and (19), it can be easily find out that TTF and TTR follow exponential distributions. To predict the artificial history of system components, TTF and TTR can be generated to cover simulation times (e.g. 1 year) in chronological order. Figure 6.1 shows an example of component operating history. To increase the result accuracy and achieve an accurate result, Monte Carlo Simulation have to be performed for a large number of scenarios, and the simulation time can be expanded to be a very long time (e.g 1000 years or more) depending on the case study and the desired accuracy. After that, the average can be calculated. What have assumed in this master thesis that the simulation is performed for a time period of one year and 10000 cases.

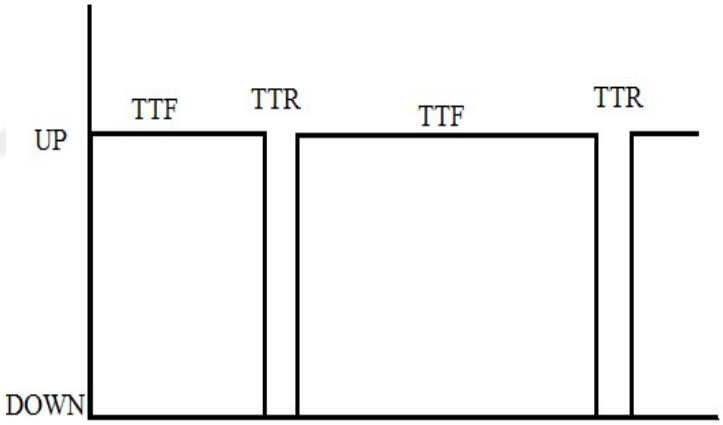


**Figure 6.1** Element operating/repair history.

# 7. SIMULATION PROCEDURE

In this master thesis for simulation part, two different algorithms of reliability evaluation are used. First one is for a distribution network that doesn't include sets of DGs, and another one is including sets of DGs. By analogy of the results from the algorithms, we can obviously see the improvement of reliability by installing DGs on the distribution system. Monte Carlo Simulation is performed on RBTS Bus 2 system with developed stochastic DGs models to simulate the uncertainty of these resources. Matlab software has been used to develop the programs which made the simulation and calculation possible, simulation procedure and calculation has inspired from the proved and published papers of IEEE [31], [32].

Because the main target of this study is the evaluation of reliability of distribution systems comprising sets of DGs, the assumptions that have mentioned in paragraph below must not have a crucial impact on the final results:

- Only permanent faults are included in the study.
- Only primary main feeder failures are included in the analysis.
- Each section is protected by a breaker to isolate faults.
- All protection devices operate successfully to isolate faults.
- Each circuit breaker is controlled by a bi-directional protection device.

The following steps are the simulation procedures of reliability evaluation of distribution networks containing distributed generation [31], [32]:

i. Generate the time to failure for each distribution component using Equations (18).

ii. Generate the operating/ repair history for each distributed generator using Equations (18) and (19).

iii. Check the time to failure of one of distribution complement is less than 8760 hr, if no one go to step i.

iv. Select the distribution component that has the least time to failure.

v. Find the affected load points connected to the failed feeder, and divide it to two groups. First group, load points can be restored. Second group, load points cannot be restored.

vi. Generate the time to repair and determine interruption energy for group one.

vii. Determine the total power of distributed generator that connected to failed feeder by using DG model feeder, and determine the total load of group 2.

viii. If total power generation is greater than or equal the total load of group 2, go to step x ix. Generate the time to repair and determine interruption energy for group one.

x. Find the distribution component that has next smallest time to failure. If it is less than 8670, go to v or go to xi if not.

xi. Repeat steps i-x until reached the maximum number of cases xii. Determine SAIFI, SAIDI, and EENS by using the Equations (15), (16), and (17) respectively.

Figures 7.1 and 7.2 show the algorithms of distribution system reliability evaluation indices with and without DGs respectively.

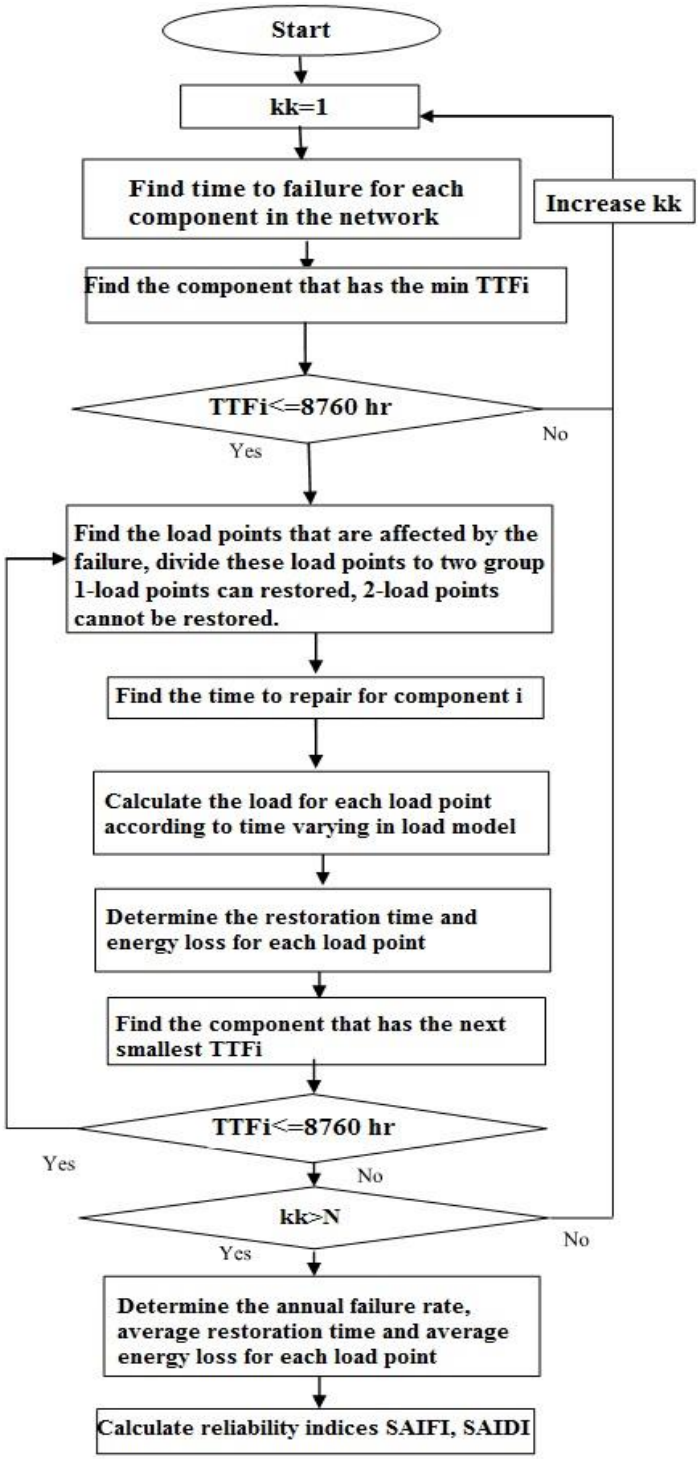


**Figure 7.1** Flowchart of distribution system reliability evaluation with no DGs [31], [32].

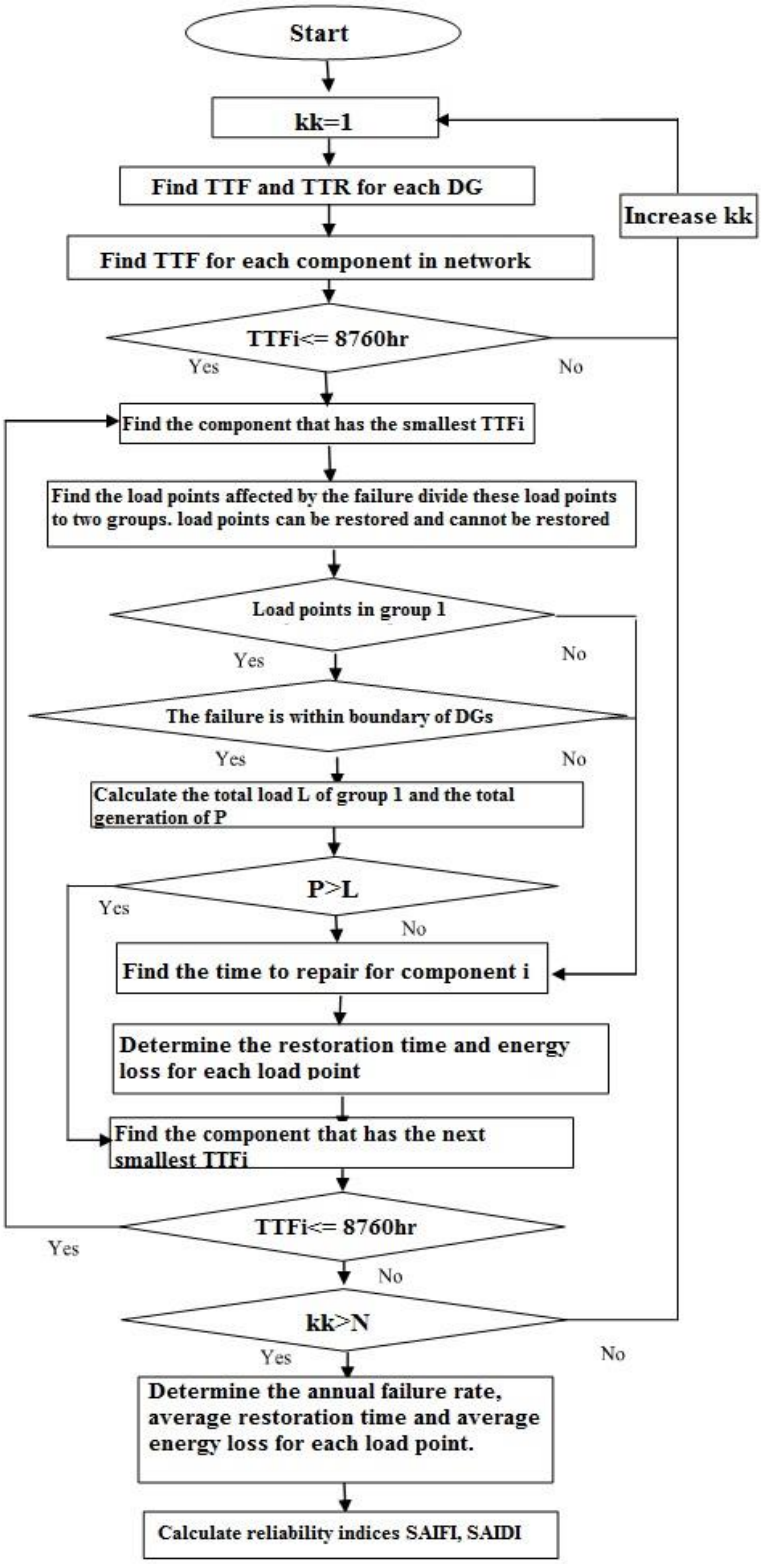


**Figure 7.2** Flowchart of distribution system reliability evaluation in presence of DGs [31], [32].

## 8. CASE STUDY

Plenty of distribution network reliability studies reported in the literature have used the RBTS Bus 2 or Bus 4 generally. Such as these networks offer the information required to lead reliability studies. Many researchers are using this information to conduct their studies relevant to distribution network reliability. The system of RBTS Bus 2 is shown in Figure 8.1 and Figure 8.2. The failure rate of the feeders and laterals are function of their length. The lengths of 11kV feeders and laterals are shown in Table 8.1 The load points data are shown in Table 8.2. The reliability indices of the distribution components are shown in Table 8.3.

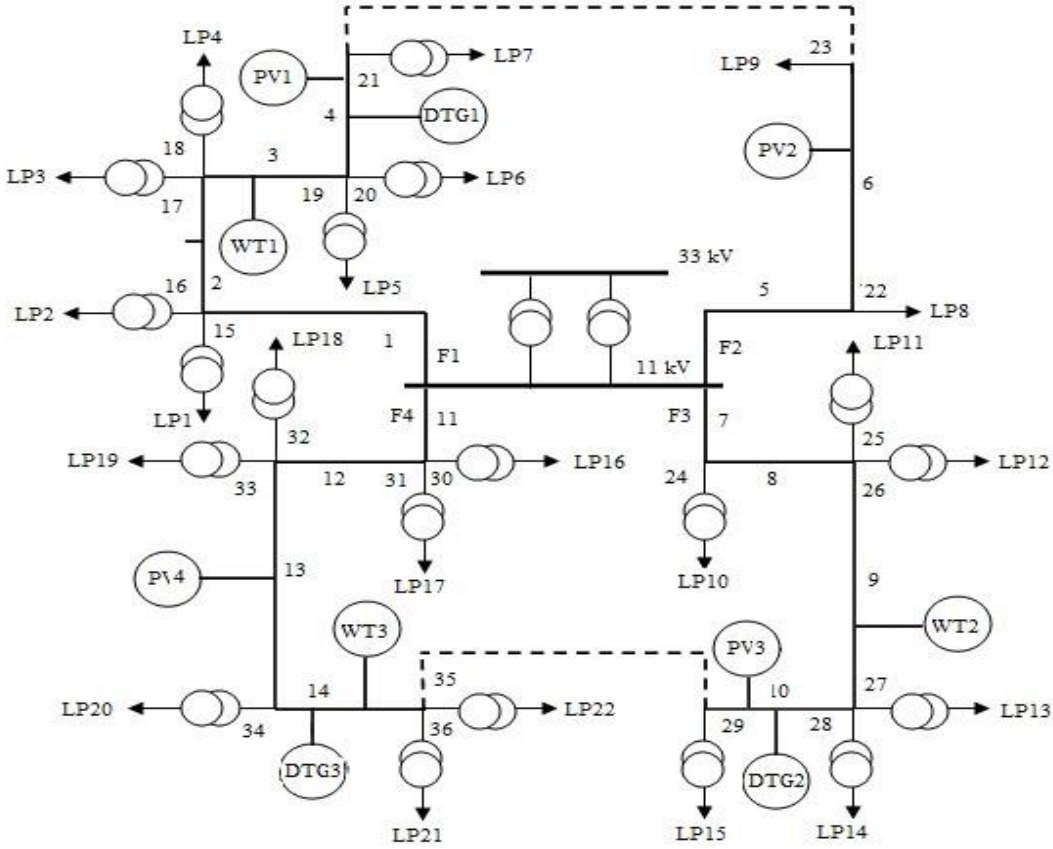


**Figure 8.1** Distribution system for RBTS bus 2 containing DGs in F1, F2, F3, F4.

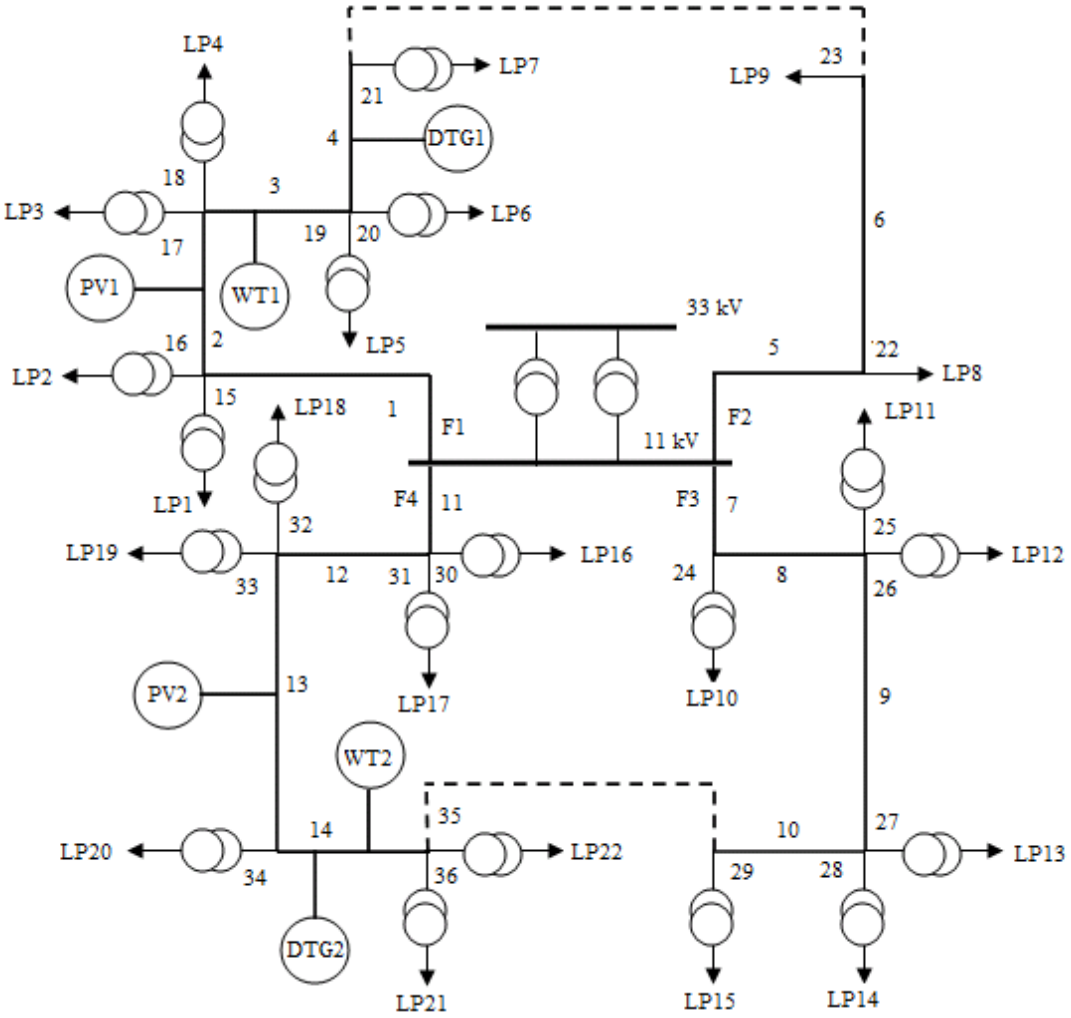


**Figure 8.2** Distribution system for RBTS bus 2 containing DGs in F1 and F2.

**Table 8.1** Feeder Lengths [14].

| Length km | Feeder Section Numbers |
|---|---|
| 0.6 | 4, 6, 9, 14, 15, 18, 24, 29, 31, 32 |
| 0.75 | 1, 2, 3, 5, 7, 10, 12, 13, 20, 25, 27, 30, 35 |
| 0.80 | 8, 11, 16, 17, 19, 21, 22, 23, 26, 28, 33, 34, 36 |

**Table 8.2** Load Points Data [14].

| Load Points | $P_{peak}$ (MW) | No. of customers per Load Point |
|---|---|---|
| 1, 2, 3 10 11 | 0.8668 | 210 |
| 4 5 13 14 20 21 | 0.5660 | 1 |
| 6 7 15 16 22 | 0.4540 | 10 |
| 8 | 1.0000 | 1 |
| 9 | 1.1500 | 1 |
| 12 17 18 19 | 0.4500 | 200 |

**Table 8.3** Reliability Indices of Distribution elements [14].

| Element | Failure Rate $\lambda$ | Repair Time $r$ |
|---|---|---|
| Transformers (11/0.415) kV | 0.015(f/yr) | 10 hr |
| Lines (11kV) | 0.0650(f/yr*km) | 5 hr |

The maximum amount of output power of each Wind Turbine is 2 MW. The failure rate and average repair time of Wind Turbine are 0.25 f/year and 20 hours [11]. In the case of maximum output power of each Photovoltaic plant is 1.75 MW. The amount of failure rate and average repair time of photovoltaic generators are considered to be 0.1 f/year and 20 hours, respectively [11]. The storage system capacity is 0.7 MWh and the converter has been rated at 0.3 MW. The rated power of each gas generators is 2.5 MW. The amount failure rates and average repair time of the DGTs are 0.25 f/year and 8 hours respectively [11]. The data regarding solar insolation is given in Table 8.4. The wind velocity and wind turbine data are given in Table 8.5 The PV efficiency $(\eta)$ and $K_c$ are 0.1 and 0.2 $m/W^2$.

**Table 8.4** The monthly light intensity (kW.hr/day/m$^2$).

| Jan | Feb | Mar | Apr | May | Jun | Jul | Aug | Sep | Oct | Nov | Dec |
|---|---|---|---|---|---|---|---|---|---|---|---|
| 6.94 | 8.34 | 12.43 | 15.43 | 10.54 | 14.54 | 16.43 | 12.53 | 12.12 | 9.34 | 7.78 | 6.98 |

**Table 8.5** The wind velocity and wind turbine data (m/s) [26].

| Wind Velocity ($V_{avg}$) | Standard Deviation ($\sigma$) | Cut-in Velocity ($V_{ci}$) | Rated Velocity ($V_r$) | Cut-off Velocity ($V_{co}$) |
|---|---|---|---|---|
| 7.50 | 2.7 | 3.5 | 12.53 | 25.52 |

The mentioned RBTS Bus 2 in this study has two different sets of DGs allocation. Firstly, named as Set 1, four sets of distributed generations in four feeders in which feeder 1 and is supplied by PV1, WT1, and DGT1, feeder 2 and is supplied by PV2,

feeder 3 and is supplied by PV3, WT2, and DGT2, feeder 4 and is supplied by PV4, WT3, and DGT3.

Secondly, named as Set 2, two sets of distributed generations in feeder 1 and feeder 3 in which feeder 1 is supplied by PV1, WT1, and DGT1, feeder 3 and is supplied by PV2, WT2, and DGT2.

What have done in this section, Monte Carlo Simulation is used to evaluate the reliability of RBTS Bus 2 with and without sets of distributed generations. In addition, the impact of implementing storage systems in the reliability assessment of the distribution network is investigated. Figures 8.3, 8.4, and 8.5 show annual average rate, average interruption time, and annual interruption energy of load points in the three cases respectively for sets of DGs shown is figure 8.1 and Figures 8.6, 8.7 and 8.8 show annual average rate, average interruption time, and annual interruption energy of load points in the three cases respectively for sets of DGs shown is figure 8.2 and Figures 8.9, 8.10, and 8.11 show annual average rate, average interruption time, and annual interruption energy of load points in the three cases respectively for sets of DGs shown is figure 8.1 with this difference that feeder 4 and feeder 10 have prolonged to 1.8 km and Table 8.6 shows the results of the overall reliability indices of the entire system for the three cases.

To recapitulate in order to be more clear about the different cases, cases has been detailed as below:

Case 1: Reliability indices calculation of RBTS without placement of any set of DGs in which the result of this master thesis calculation and referenced paper [30] is equal because of using same software.

Case 2: Reliability indices calculation of RBTS with placement of DGs set 1.

Case 3: Reliability indices calculation of RBTS with placement of DGs set 2.

Case 4: Reliability indices calculation of RBTS with placement of DGs set 1 in addition to apply storage system.

Case 5: Reliability indices calculation of RBTS with placement of DGs set 2 in addition to apply storage system.

Case 6: Reliability indices calculation of RBTS with placement of DGs set 2 of referenced paper in which the difference in the result of Case 3 and Case 6 is because of initial meteorological data (such as wind data, type of wind turbine, type of solar panel, solar panel insulation, irradiance, turbidity…) input to the DGs and thus difference in output power of DGs.

Case 7: Reliability indices calculation of RBTS with placement of DGs set 1 with some changes in configuration of system which is prolonging feeder 4 and feeder 10 to 1.8 km.

Attention to this point is very important that all these case have been definded in order to prove the impacts of distributed generations and also storage system, besides that, they can demonstate the important effects of lenght of feeders.

The failure rate of the feeder section is a function of the length, and each section has a different length. As a result, those feeders which have shorter length, must have a lower failure rates in comparison with the other feeder that their length would be higher. the failure rates of (F2) which is the shortest feeder (F2) is low in comparison to the long feeders (F1, F3, F3). In RBTS Bus 2 without sets of DGs this is very clear that, the load points located at the end of the main feeder have high failure rates because permanent faults result in isolating these load points from the main source.

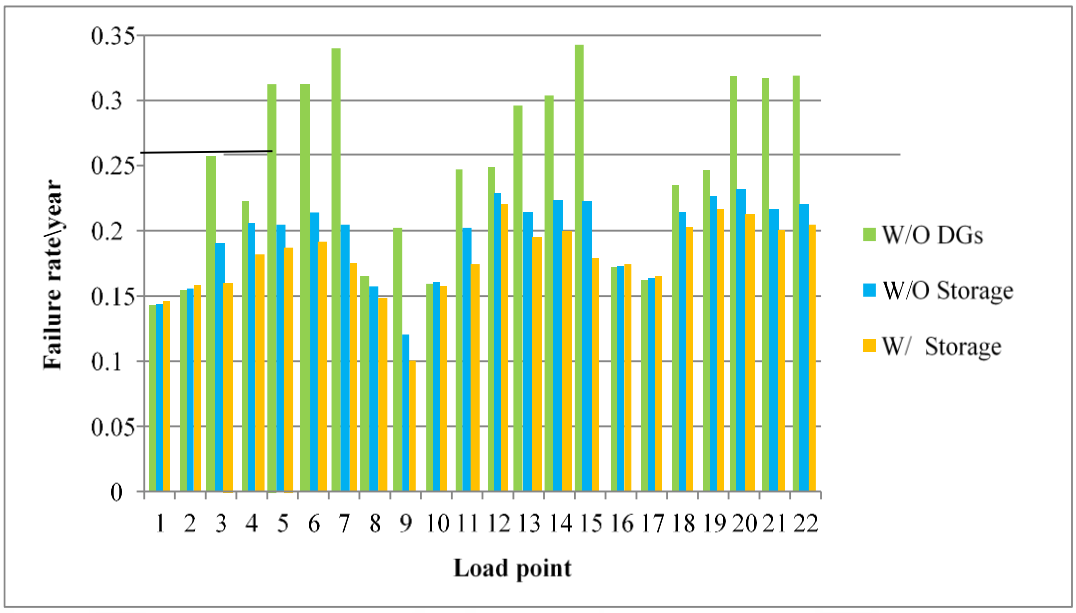


**Figure 8.3** Failure rate of All Load Points of Set 1

In another word, those load points who located at the end of the main feeder comprising the DGs have low failure rates. The reason of reducing of failure rate in case with presence of DGs is because of the extra generation capacity that have been generated and provided by the distributed generations and storage system during that period of time that the main sources are not available. There must be some different facilities when the network is dealing with bidirectional power flows. It must comprise two breakers in order to isolate the fault from both sides and as a result all the load points that they have connected to the first section of the feeders are technically considered outside the DGs zone boundary [33], Figure 8.3, 8.6 and 8.9 demonstrates that there is no reduction in the average failure rate for these load points. This is very clear that there is no improvement in the failure rates of load points 1, 2, 8, 10, 16 and 17 and that is because of probabilistic simulation was used in this master thesis studies.

Average interruption time is a function of failure rates and average restoration time of network components. Therefore, all of the previous observations are applicable

to Figure 8.4, 8.7, 8.10. All of the feeders in RBTS Bus 2 are connected to neighboring feeders through a normal operating point (meaning that the breakers are open in normal condition), which allows network operators to transfer the load in case of a failure on the main feeder. Transferring loads during the failure would result in less average interruption time. The average interruption time of load points located outside the boundary of the sets of DGs would not be affected by them. In addition, the average interruption time of the load points connected to the first section of the sets of DGS pointes are supplied by the main

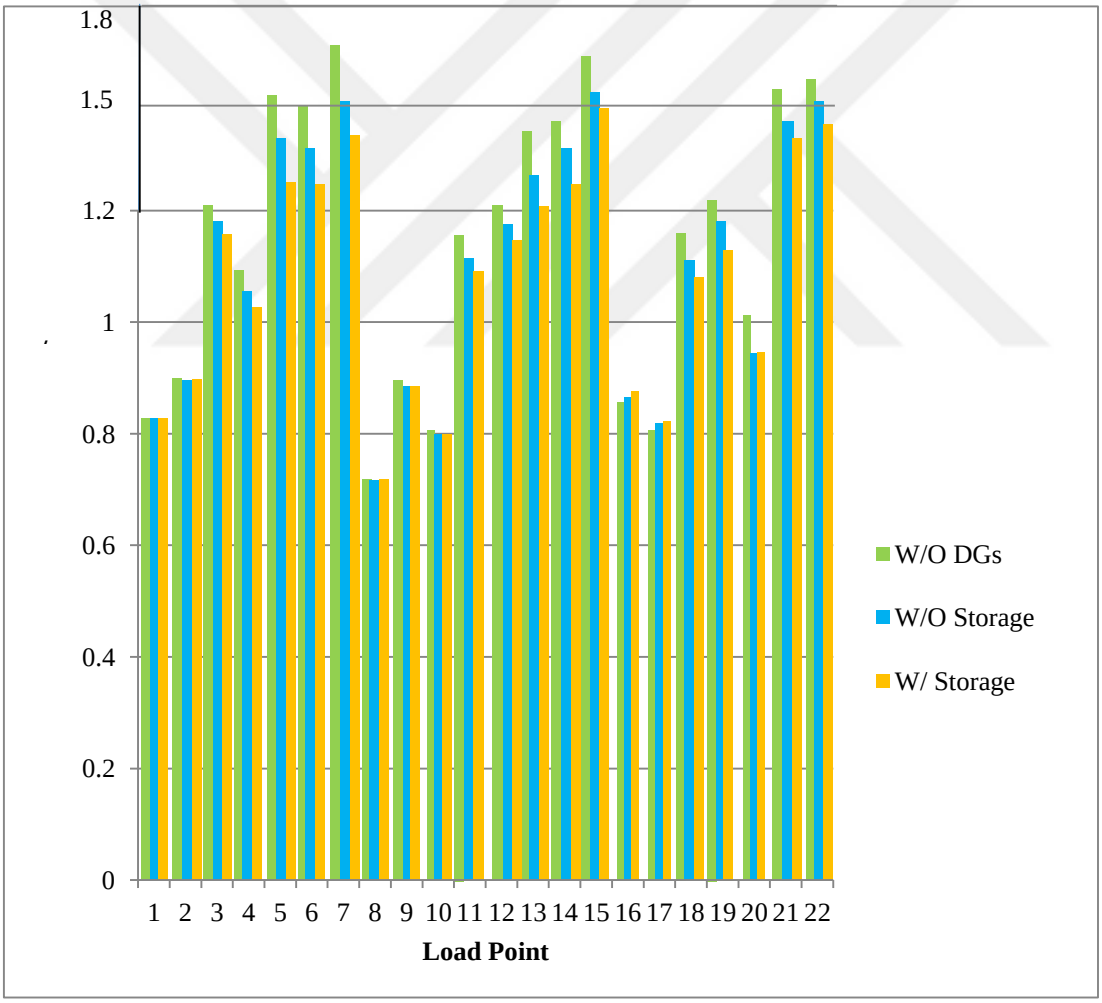


**Figure 8.4** Average interruption time of all load points of set1.

grid (two breakers would open to interrupt the fault) or these load points cannot be restored when the first section failed. It is observed that the average interruption time of load points connected to the second feeder section such as 3 and 4 are not accurate in sets of DGs and storage cases due to using a probabilistic method to evaluate the reliability in this study. As result of this, it is observed from Figure 8.4, 8.7 and 8.10 that sets of DGs can reduce average interruption time slightly. The average interruption energy of load point is a function of the average interruption time and the load of each load point. As a result, all of the previous observations are applicable to Figure 8.5, 8.8 and 8.11.

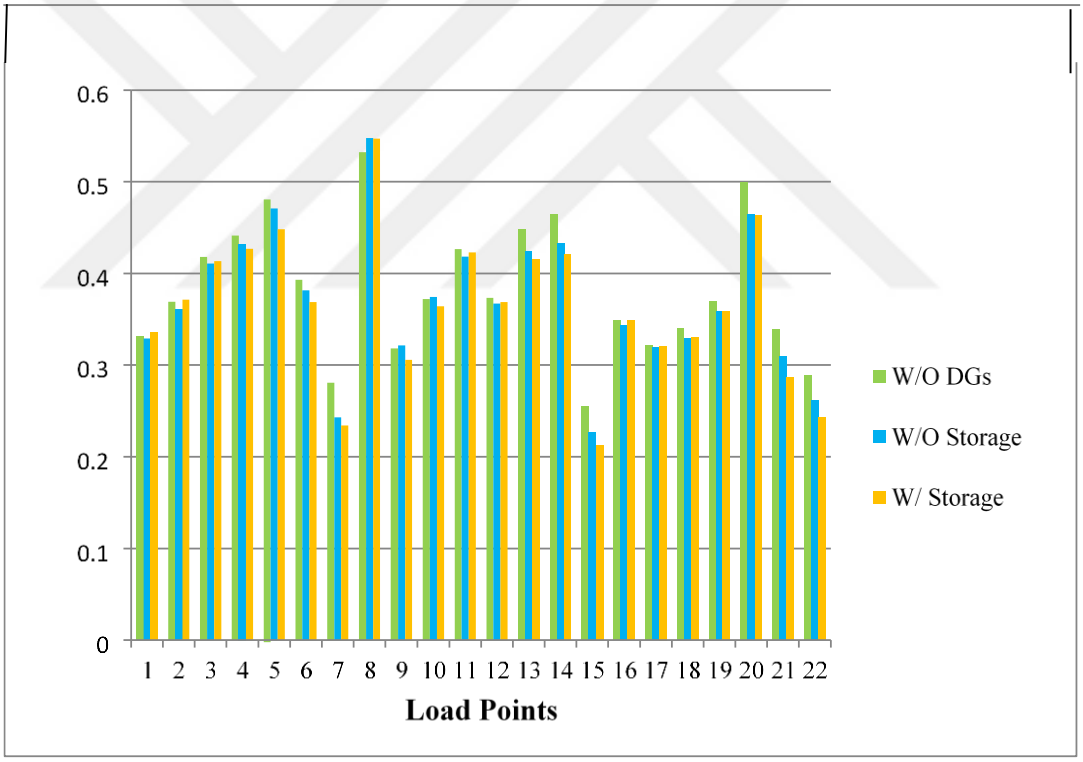


**Figure 8.5** Average interruption energy of all poad points of set 1.

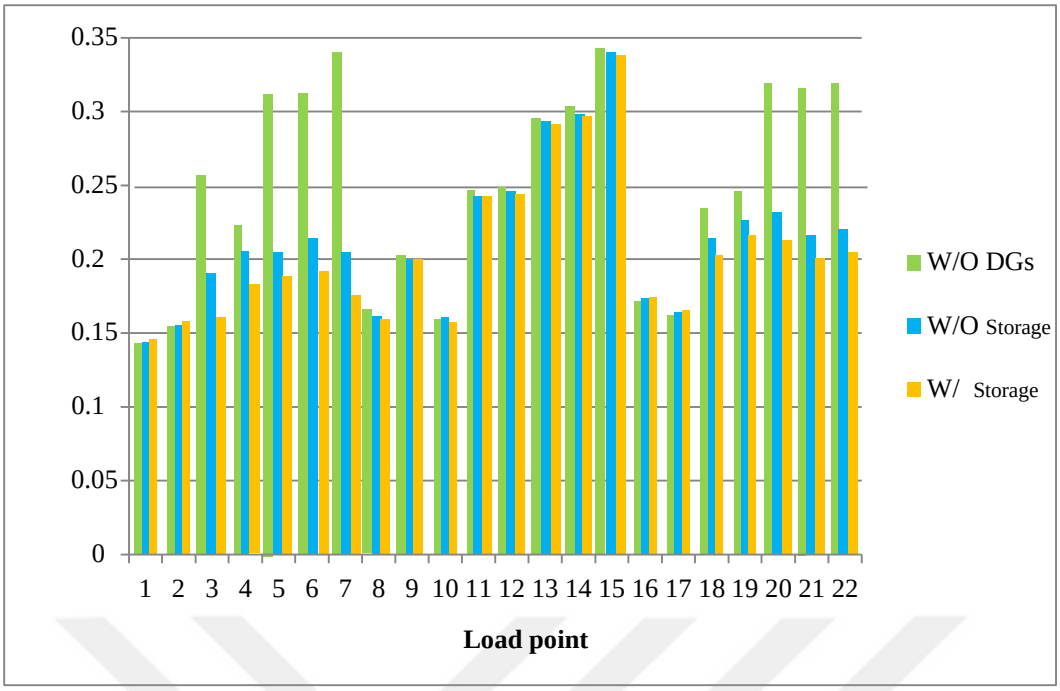


**Figure 8.6** Failure Rate of All Load Points of Set2.

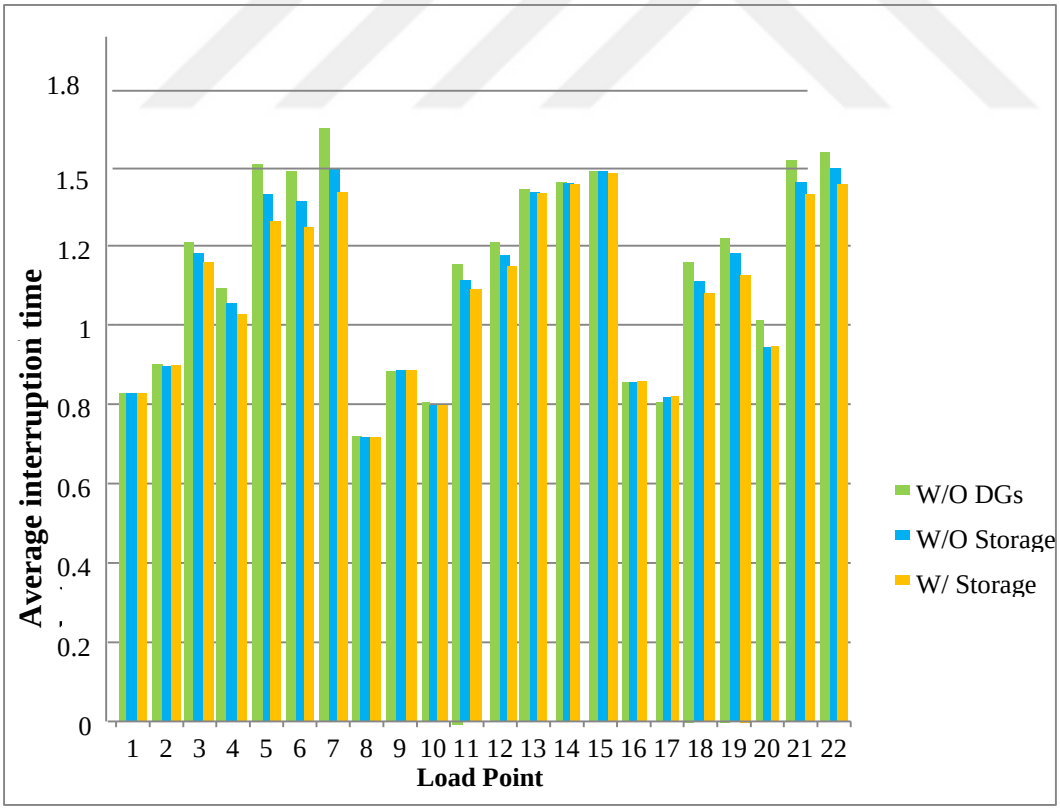


**Figure 8.7** Average interruption time of all load points of set2

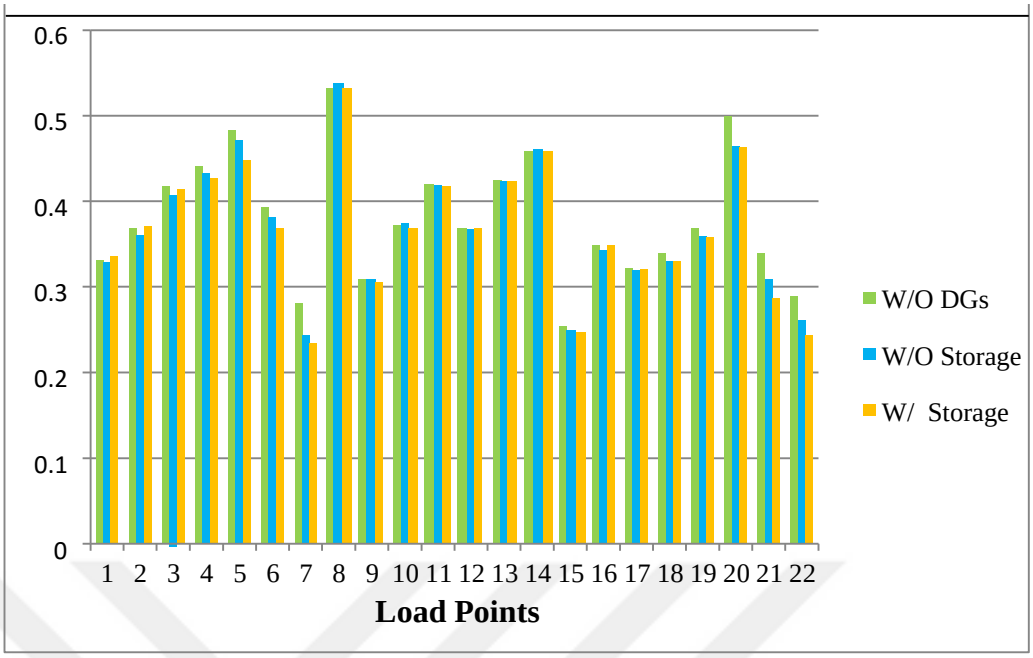


**Figure 8.8** Average interruption energy of all load points of set 2.

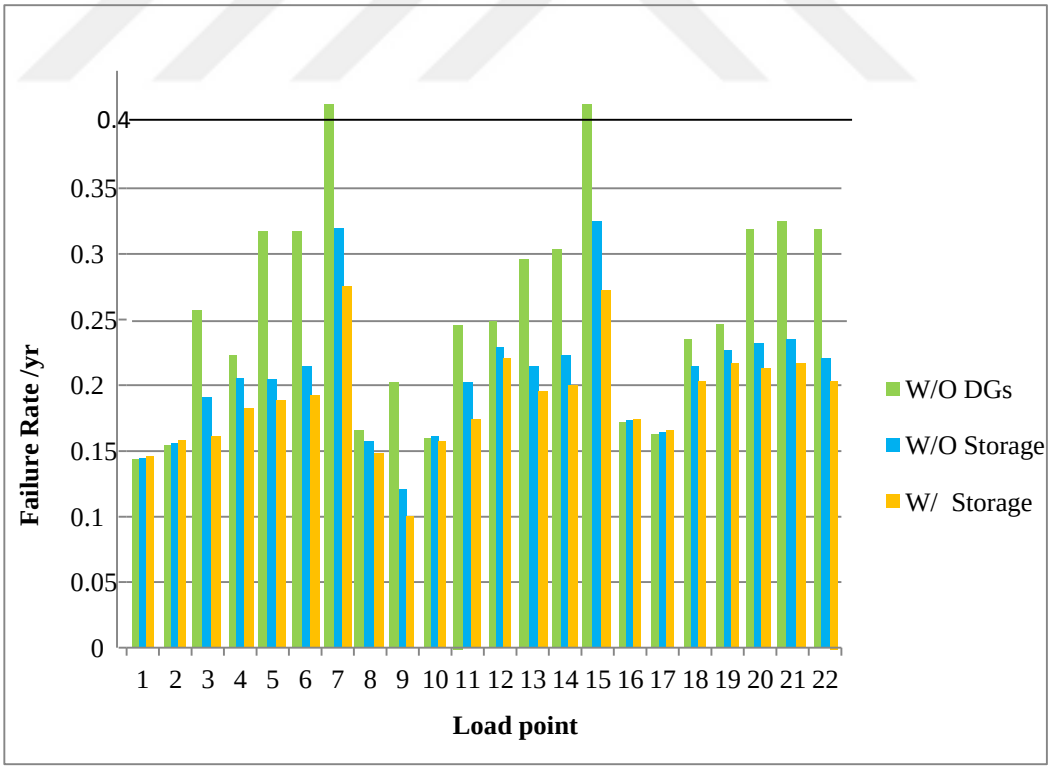


**Figure 8.9** failure rate of all load points prolonged feeders case.

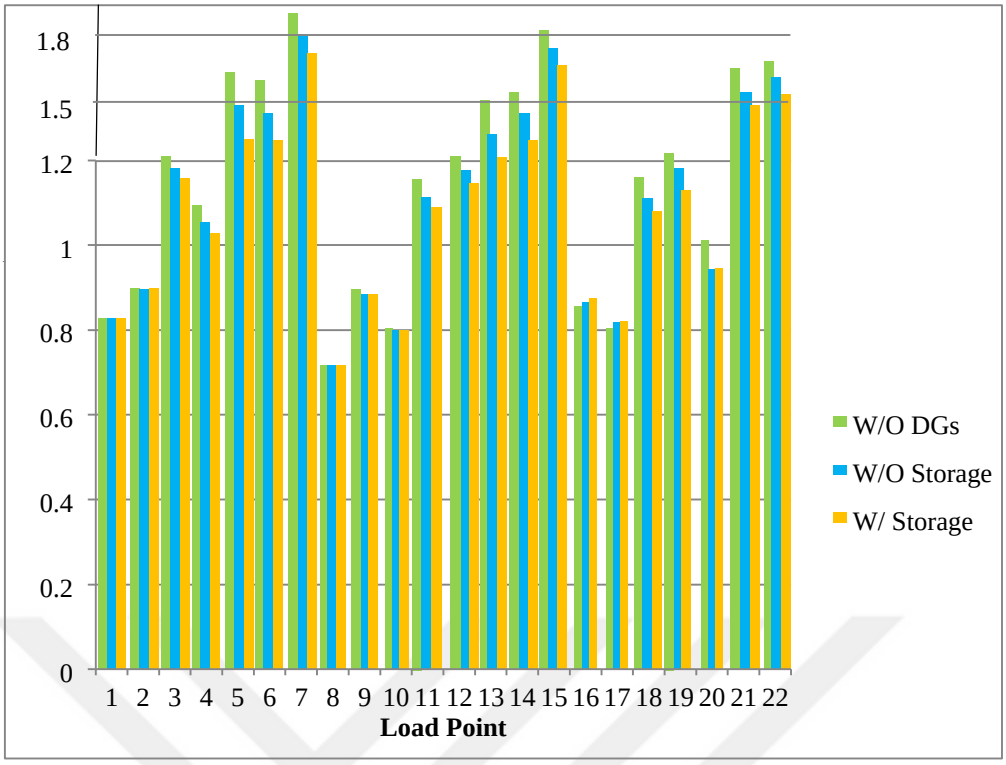


**Figure 8.10** Average interruption time of all load points of prolonged feeders case.

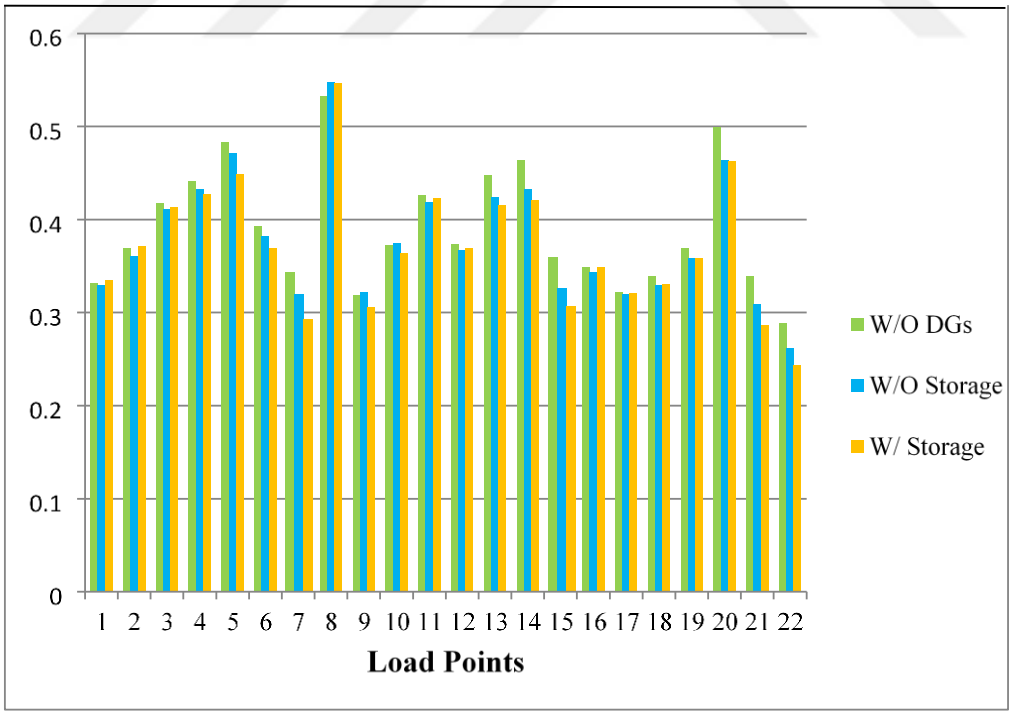


**Figure 8.11** Average interruption energy of all load points of prolonged feeders case.

**Table 8.6** Reliability Indices of RBTS BUS2

| Index | Case 1 [31] (without DGS) | Case 2 (with DGs set 1) | Case 3 (with DGs set 2) | Case 4 (with storage set1 ) | Case 5 (with Storage set2) | Case 6 [31] (with DGs set 2) | Case 7 [Increased length of feeders] |
|---|---|---|---|---|---|---|---|
| SAIFI (/yr) | 0.1665 | 0.1219 | 0.1397 | 0.1112 | 0.1314 | 0.1505 | 0.1712 |
| SAIDI (hr/yr) | 0.9677 | 0.9123 | 0.9345 | 0.8934 | 0.9115 | 0.9473 | 0.9824 |
| EENS (MWh/yr) | 9.3597 | 8.7845 | 8.9943 | 8.6487 | 8.8721 | 9.0004 | 9.5874 |

**Table 8.7** Variance of Reliability Indices of RBTS BUS2

| Index | Case 1 [31] (without DGS) | Case 2 (with DGs set 1) | Case 3 (with DGs set 2) | Case 4 (with storage set1 ) | Case 5 (with Storage set2) | Case 6 [31] (with DGs set 2) | Case 7 [Increased length feeders] |
|---|---|---|---|---|---|---|---|
| Var(SAIFI) | 1.1925* 10^(-5) | 3.2* 10^(-5) | 1.8145* 10^(-5) | 5.3* 10^(-5) | 6.4642* 10^(-5) | 4.2309* 10^(-5) | 3.2357* 10^(-5) |
| Var(SAIDI ) | 7.1519* 10^(-4) | 0.0017 | 0.0010 | 0.0037 | 0.0025 | 6.1757* 10^(-4) | 0.0020 |
| Var(EENS) | 0.0416 | 0.1462 | 0.2077 | 0.1069 | 0.2265 | 0.3344 | 0.1860 |

**Table 8.8** Standard Deviation of Reliability Indices of RBTS BUS2

| Index | Case 1 [31] (without DGS) | Case 2 (with DGs set 1) | Case 3 (with DGs set 2) | Case 4 (with storage set1 ) | Case 5 (with Storage set2) | Case 6 [31] (with DGs set 2) | Case 7 [Increasing length of feeders] |
|---|---|---|---|---|---|---|---|
| S.D(SAIFI) | 0.0035 | 0.0057 | 0.0043 | 0.0073 | 0.1314 | 0.0065 | 0.0057 |
| S.D(SAIDI ) | 0.0267 | 0.0413 | 0.0321 | 0.0607 | 0.0501 | 0.0249 | 0.0451 |
| S.D(EENS) | 0.2040 | 0.3823 | 0.4558 | 0.3269 | 0.4759 | 0.5782 | 0.4312 |

As the results has shown, by doing analogy, it can be defined that by increasing the length of feeder 4 and feeder 10 their failure rate, unavailability and average interruption energy have increased as well. Also the mentioned results have shown that the implementation of DG's in distribution networks can improve the reliability of distribution networks by offering a supportive source when the main source is not available. As results have shown on the table 8.6, by analogy of the results, we can see that improvement in set 1 is more effective than set 2 and that is because of number and placement of DGs that is used in this set. It is seen, that the overall reliability indices have improved, which is shown in Table 8.6. Based on the observation in Figures 8.2, 8.3, 8.4, 8.5, 8.6, 8.7, 8.8, 8.9, 8.10 and 8.11 we observe that reliability improvement associated in the presence of DGs not only depends on the size of the DGs but also on location and distribution of DGs. The observed results have been considered different desired and important factors like as random events and factors such as failures, variation in WT and PV output power, and the repair time. As the result has shown, by doing a comparison between case 3 and case 6 there is a difference between improvement by using DGs set and that’s because of meteorological input data between sample case of Kermanshah province and initial data of city that author of article has used for their calculation.

# 9. CONCLUSION

When all is said and done, the implementation of renewable resources in distribution networks is promising in many aspects that can be expressed such as reducing green gas emissions, improving reliability of power services and reducing the power losses on transmission networks. Applying new technologies play a pivotal role that using renewable sources of energy are depended on them. In order to accommodate renewable resources in a distribution network, new technologies are required to deal with the complexity and intermittency of these resources. Using distributed generations in different applicable sets could pave the way to integrate solar energy and wind energy in distribution systems, which can deal with different modes of operation.

A reliability evaluation was conducted on a test distribution network. RBTS Bus2 data have been used because it offers very detailed information on each distribution component such as the failure rate and average restoration time of its circuits, transformers and breakers. Since the original RBTS Bus2 does not contain any distributed generation, the system has been modified to include PV's, WT's, and DGT's. For the sake of evaluating the reliability of distribution networks containing PV and WT which are random in their output production, probabilistic techniques must be used for this task. Monte Carlo Simulation is a well-known method and useful tool for the mentioned subject of this master thesis; it needs only basic information to generate the artificial history of the system components. By

generating large and random numbers of scenarios of the system element, the failure rates and average restoration times could be simply found by computing the frequency and the duration of the down time of each load point.

In this master thesis for photovoltaic simulation section, a stochastic model of a normal distribution has been progressed and used to simulate the intermittency of the solar insolation. Also, for wind turbine simulation section, a two parameters Weibull distribution progressed and developed to apply with WT output power model to simulate the wind velocity randomness A DGT model has been developed to supply the loads during the peak. Failures rates and average restoration times were assigned to all distributed energy resources, and these indices were taken into account in reliability assessment studies. Common indices such as SAIFI, SAIDI and EENS have been calculated to evaluate the reliability of the distribution network in seven cases without DGs, with sets of DGs and with storage system.

What is mainly concerned in this master is that to analyze and also provide a solution to reduce duration time and number of interruption in distribution network. Improvement in reliability indices of SAIFI, SAIDI and EENS can prove that by applying DGs in some appropriate locations could be practical to decrease duration and number of interruptions in a distribution network. In the case 2 with placement of DGs set 1, SAIFI, SAIDI, and EENS were improved by 27.1%, 5.8%, and 6.3%, respectively. In storage case 4, SAIFI, SAIDI, and EENS were improved by 32.4%, 7.6%, and 8.1%, respectively. In the case 3 with placement of DGs set 2, SAIFI, SAIDI and EENS were improved by 16.2%, 3.4% and 3.8% respectively. In storage case 5, SAIFI, SAIDI and EENS were improved by 21.1%, 5.7% and 6.2% respectively. What have also demonstrated in this master thesis that lengths of feeders are directly relevant to the amount of failures in a network. In the seventh

case, as we increased the length of feeders, we could understand from the result that by increasing length of feeders' the amount of failure rate, and other reliability indices were increased; SAIFI, SAIDI and EENS has increased by 30.1%, 15.5% and 19.8% which shows that number and duration of interruption and also amount of energy that have not supplied has increased.

# 10. FUTURE WORK

In this master thesis, reliability impacts of distributed generation on distribution system reliability using Monte Carlo Simulation is mainly discussed. Because of weather conditions can result in forced outages in distribution networks, future work should take into consideration these conditions and come up with a probabilistic model to simulate it to investigate the impact on the reliability. Meteorological data such as the annual rate of the huge storms, thunders and hurricanes at the desired locations should be used.

Since the location and the size of the DG's can affect the reliability of the power systems, finding the optimal size and location of the DG's that will have the greatest reliability improvement can be investigated in future work. There are many different optimization techniques in science world that depends on the need could be applied to a desired model. Some optimization techniques would be fit for the subject of this study that consider some constraints such as the size range of distributed generation and the distributed generation location boundary in the distribution network. Optimization technique of Cuckoo is a new and well-known technique that could be applied for this subject. Cuckoo search algorithm would be a useful and a simple method because it does not use the gradient information.

## REFERENCES


**[1] Url-1** <http://www1.eere.energy.gov/solar/sunshot /> Nov 2011.

**[2]Url-2**<http://cleantechnica.com/2012/05/25/2224-gw-pvsolar-output-germany-new-record > May 2012.

**[3]Url-3**<http://www.epia.org/publications/epiapublications/globaphotovoltaicsuntil2016.html> September 2012.

**[4] Url-4** <http://www.20percentwind.org> September 2012.

**[5] Url-5** <http://www.evwind.es> September 2012.

**[6] Url-6 <** http://www.wind-energie.de/en> September 2012

**[7]G. Heydt**, "The next generation of power distribution systems," IEEE Transactions on Smart Grid, vol. 1, No. 3, pp. 225-235, December 2010.

**[8] C. Chen, Y. Lee and Y. Chang**, "A novel control system for microgrid operation and protection," Annual international conference on Instrumentation, Control, Information Technology and System Integration, Tokyo, Japan, Sep. 13-18,2011, p. 722-726.

**[9] S. Lee**, "Probabilistic online risk assessment of non-cascading and cascading transmission outage contingencies," European Transactions on Electrical Power, vol. 18,pp. 835-853, November 2008.

**[10] I. Bae and J. Kim**, "Reliability evaluation of customers in a microgrid," IEEE Transactions on Power Systems, Vol. 23, No. 3,pp.1416-1422, August 2008.

**[11] L. Husshi , S. Jian, L. Sige**, "Reliability evaluation of distribution system containing microgrid," China International Conference Electricity Distribution (CICED), China, September, 2010,pp. 1-6.

**[12] L. Sige, Z. Xiaoxin, F. Mingtain, and Z. Zhuping**, "Probabilistic power flow calculation using Sigma-point transform algorithm," International Conference on Power System Technology, Chongqing, China, October 22-26,2006,pp 1-5.

**[13] Y. Wu and W. Change**, "Run-time reduction in Schur complement method based transmission constrained dispatch for Monte Carlo production cost," International Conference on Power System Technology, Kunming, China, October 13-17,2002,pp 204-210.

**[14] R. N. Allan, R. Billinton, I. Sjarief, L. Goel, and K.S**. So, "A reliability test system for educational purposes basic distribution system data and results," IEEE Transactions on Power Systems ,Vol. 6, No. 2, pp.813-820, May 1991.

**[15] R. Bllinton, S. Kumar, N. Chowdhury, K. Chu, K. Debnath, L. Goel, E. Khan, P. Kos, G. Nourbakhsh and J. Oteng-Adjei,** "A reliability test system educational purposes basic data," IEEE Transaction on Power Systems, Vol. 4, No. 3, pp. 1238-1244, August 1989.

**[16] A. David,** "Availability modeling of stochastic power sources," IEE Proceeding, Vol. 129, No. 6, pp.239-248, November 1982.

**[17] M. Khallat and S. Rahman**, "A probabilistic approach to photovoltaic generator performance prediction," IEEE Transactions on Energy Conversion, Vol. Ec-1, No. 3, pp.34-40, September 1986.

**[18] T. Sitoh, H. Suzuki and Y. Sekine,** "Economic evaluation of a residential photovoltaic system based on a probability model using actual metrological data," IEEE Transaction on Energy Conversion, Vol. EC-2, No. 1, pp. 9-15, March 1987.

**[19] P. Giorestto and K.. Utsurgoi,** "Development of a new procedure for reliability modeling of wind turbine generators," IEEE Transactions on Power Apparatus and Systems, Vol. PAS-102, No.1, pp.134-143, January 1983.

**[20] X. Wang, H. Dai and R. Thomas,** "Reliability modeling of large and associated utility interface systems," IEEE Transactions on Power Apparatus and Systems, Vol. PAS-103, No. 3, pp. 569-575, March 1984.

**[21] R. Karki, P. Hu and R. Billinton,** "A simplified wind power generation model for reliability evaluation," IEEE Transaction on Energy Conversion, Vol. 21, No. 2, pp. 533-540, June 2006.

**[22] R. Billinton and P. Wang,** "Teaching distribution system reliability evaluation using Monte Carlo simulation," IEEE Transactions on Power Systems, Vol. 14, No. 2, pp. 397-403, May 1999.

**[23] S. Lin, M. Han, R. Fan., and X. Hu.,** "Configuration of energy storage system for distribution network with high penetration of PV," Renewable Power Generation (RPG 2011) IET Conference, Edinburgh, UK, September, 2011, pp.1-6.

**[24] J. Li, B. Zhang, J. Wang, C. Mao, Y. Liu, K. Wang, Y. Duan, X. Zheng, and L. Wan,**" Steady security risk assessment considering uncertainties of wind power and fault in smart grid," Modeling, Identification and Control, International Conference, Okayama, Japan, July, 2010, pp. 600-605.

**[25] Y. Atwa and E. El-Saadany,** "Reliability evaluation for distribution system with renewable distributed generation during islanded mode of operation," IEEE Transactions on Power Systems, Vol. 24, No. 2,pp.572-581, May 2009.

**[26] X. Liu, A. Chowdhury, and D. Koval,** "Reliability evaluation of a wind-diesel battery hybrid power system," Industrial and Commercial Power Systems Technical Conference, Clearwater Beach, Florida, USA, May, 2008, pp. 1-8.65

**[27] S. Cha, D. Jeon, I. Lee, and J. Kim,** "Reliability evaluation of distribution system connected photovoltaic generation considering weather effects," Probabilistic Methods Applied to Power Systems, International Conference, Ames, Iowa, USA, September 2004, pp. 451-456.

**[28]Url-7<** http://www.puc.texas.gov/>

**[29] R. Billinton, and R. Allan**, Reliability evaluation of power systems, Longmans, London Press, New York (1994).

**[30] Url-8 <** **http://www.kut.ac.ir/>**

**[31] Abdulaziz. A. Alkuhayli, Srinath Raghavan and Badrul H. Chowdhury, "**Reliability Evaluation of Distribution Systems Containing Renewable Distributed Generations" International conference NASP, Champaign, IL, 9-11 Sept. 2012, DOI: 10.1109/NAPS.2012.6336324

**[32]Ahmed R. Abul'Wafa, A. T. M. Taha,** "Reliability Evaluation of Distribution Systems under μ Grid-Tied and Islanded μ Grid Modes Using Monte Carlo Simulation", Smart Grid and Renewable Energy, Vol.5 No.3(2014), Article ID:44029, DOI:10.4236/sgre.2014.53006

**[33] Carmen L. T. Borges, Mariana Costa, "**Reliability assessment of microgrids with renewable generation by a hybrid model", IEEE Powertech 2015, Eindhoven, June 29 2015-July 2 2015, DOI: 10.1109/PTC.2015.7232526, pp.1-6

**CURRICULUM VITAE**

**Name Surname:** Sorush SAEEDI

**Place and Date of Birth:** Tehran/Iran & 17-Februray-1990

**E-Mail:** sorush.saeedy@gmail.com, saeedi@itu.edu.tr

**EDUCATION:**

**B.Sc.:** Kermanshah University of Technology Kermanshah, Iran
(Jan 2008 - Sep 2012)

**PROFESSIONAL EXPERIENCE AND REWARDS:**

Professional EXPERIENCE – Oct 2008 to Aug 2013 (4+1 Years)

Exon Ab Pars, Iran

| | |
|---|---|
| • Assistant Manager | July 2013 - August 2013 |
| • Senior Executive | April 2011 - July 2013 |
| • Executive | October 2009 - April 2011 |
| • Apprentice Engineer | October 2008 - October 2009 |

**Education & Professional Software/Programming Languages**

- Proficient in MATLAB, PLC programming
- SAP ( With trainings on Maintenance Planning )
- Microsoft Office, Digsilent