DISSERTATION

DEVELOPMENT OF A METHOD FOR THE REGIONAL MANAGEMENT AND LONG-TERM USE OF NON-RENEWABLE RESOURCES:

THE CASE FOR THE ESSENTIAL RESOURCE PHOSPHORUS

ausgeführt zum Zwecke der Erlangung des akademischen Grades eines Doktors der technischen Wissenschaften unter der Leitung von

o. Univ. Prof. Dr. Paul H. Brunner
Inst. Nr. 226
Institut für Wassergüte, Ressourcenmanagement und Abfallwirtschaft

Eingereicht an der Technischen Universität Wien
Fakultät für Bauingenieurwesen

von

Dipl.-Ing. Demet Seyhan
Matrikelnummer 0226842
A-1040 Wien

Wien, im Juni 2006

Dein Leben sei ein hundertfältiger Versuch-
dein Mißlingen und Gelingen sei ein Beweis:
und sorge dafür, dass man wisse,
was du versucht und bewiesen hast

Nietzsche

Everything to do with yesterday has gone with yesterday.
Now it's time to say something new

Mevlana

Für ihn.

DANKSAGUNG

Von meinem Betreuer, Paul H. Brunner habe ich nicht nur die Methodik und die Arbeit gelernt, sondern alles was ich über das Berufsleben weiß. Das wird mir die nötige Kraft für mein zukünftiges Leben geben.

Mein zweiter Betreuer, Ewald Schnug, hat mir mit seinem Altruismus und seiner Weltanschauung Hoffnung und Glauben an die Menschen gegeben. Die werde ich gut gebrauchen können.

Ohne den ÖAD, der diese Arbeit mit einem Nord-Süd-Dialog Stipendium finanziert hat, wäre meine Dissertation in Wien nicht möglich gewesen.

Ohne Markus Mayer hätte ich alles, was Österreich für mich speziell macht und was daran liebenswert ist, nicht kennengelernt. Ohne seine Unterstützung, seine Kommentare und unsere Diskussionen wäre diese Studie nicht dieselbe.

Ohne Romi Schneider, Karlheinz Böhm und den Türkischen TV-Sender TRT hätte der Film nicht auf das kleine Mädchen gewirkt, hätte die Schülerin die Deutsche Sprache nicht gelernt, hätte die Studentin diesen Weg nicht gewählt und sie wäre nach ihrem Abschluss nicht bei der Österreichischen Botschaft gelandet.

Ohne Paul Hans Brunner wäre ich nicht nach Österreich gekommen.

Ohne die KollegInnenschaft der Abteilung ‚Abfallwirtschaft und Ressourcenmanagement' und die Beamtinnen der ÖAD Geschäftstelle Wien hätte ich es nicht geschafft, die Schwierigkeiten der anderen Kultur und des Alltags zu überwinden.

Ohne die Erfahrung der letzten vier Jahre wäre ich nicht das was ich jetzt bin. Ohne meine liebe Familie und Istanbul hätte ich es nicht geschafft.

Dafür bin ich dankbar.

ABSTRACT

Phosphorus (P) is a non-renewable, essential resource with no substitute. It also pollutes surface waters by causing eutrophication under certain conditions. Therefore, it is important to determine how well the substance is managed in a region, as well as suggesting ways of improvement. Phosphorus management efforts were up to now concentrated on the efficient use of the resource in agriculture, or on the control of the P-emissions into surface waters. This study presents a method for the regional management of the non-renewable resource, P, with a long-term perspective, applied to Turkey and Austria as case studies and by using the Material Flow Analysis (MFA) technique. The study aims the collection of nation-wide statistical data in order to describe the resource use and waste management; the evaluation of this descriptive model after having it quantified, and the comparison of various management strategies with respect to their long-term solution potential. The evaluation method offered incorporates the hinterland consumption and involves indicators, which are defined based on the depletion and the pollution potentials created. Therefore, it can be used for the inter-regional comparisons on the resource use performance. Using this approach for planning and monitoring would also be possible, which is shown in this study by applying it to various future projections of resource availability, i.e., the scenarios. On the other hand, the study shows the importance of analysing the substance flows in a thorough way, so that all important flows are accounted for and the flexibility necessary for the partial alterations in the model is achieved. It further shows the widely varying substance flows (or metabolisms) from region to region. The period of self-sufficiency of a region and the ways of extending this period; potential pollution; hinterland and future pollution potentials; contribution of a region to the depletion problem; extent and limits of the conservation efforts (saving/ direct recycling/ stocking and long-term recycling) are discussed by using indicators and scenarios. Concepts such as depletion, hinterland use and useful stock (generation) are (re)defined and used in evaluating the material flows.

KURZFASSUNG

Phosphor (P) ist eine lebensnotwendige, nicht erneuerbare und nicht ersetzbare Ressource. Gleichzeitig birgt P Gefahren für die Umwelt, indem es zur Schädigung der Oberflächengewässer durch Eutrophierung beiträgt. Daher soll die Effizienz der Nutzung dieser Ressource untersucht werden. Bisher konzentrierte sich die Phosphorbewirtschaftung auf dessen effektiven Einsatz in der Landwirtschaft und auf Vermeidung von Gewässerverschmutzung. Diese Arbeit schlägt eine auf Stoffflussanalyse (SFA) basierende Methode für das langfristige Management nicht-erneuerbarer Ressourcen vor und wendet diese auf nationaler Ebene auf P an, in der Form zweier vergleichender Fallstudien: Österreich und die Türkei. Die Methode beinhaltet die Definition der Flüsse, die den Ressourceneinsatz und das Abfallaufkommen beschreibbar machen; deren Quantifizierung auf Basis der nationalen Statistiken; die Evaluierung dieses deskriptiven Modells; sowie den Vergleich der langfristigen Zielerfüllung unterschiedlicher Managementstrategien. Die Evaluationsmethode beschreibt Indikatoren für die von einer Region ausgehende potentielle Erschöpfung der Ressourcen und potentielle Umweltverschmutzung, unter Berücksichtigung eines globalen Hinterlandkonzeptes. Sie eignet sich zur Planung und Überwachung von Managemententscheidungen. Dies beispielhaft an der Analyse von Szenarien dargelegt, an Hand derer die erwarteten Reaktionen auf mehrere mögliche zukünftige Verläufe der Verfügbarkeit von Phosphor untersucht werden. Diese Arbeit zeigt die Bedeutung (und Wege zu) einer gründlichen Stoffflussanalyse, weil nur so nicht erfasste Flüsse sichtbar gemacht werden können und erst dadurch die nötige Präzision des Modells erreicht wird. Weiters wird deutlich, wie sehr sich Stoffflüsse von Region zu Region unterscheiden können. Anhand von Indikatoren und Lagerveränderungen werden mehrere Konzepte herausgearbeitet: Die Lebensdauer der Ressourcenvorräte einer Region und Methoden, diese zu verlängern; das Umweltverschmutzungspotential; der Einfluss auf das Hinterland und zukünftige Generationen; der Beitrag zur globalen Ressourcenerschöpfung; und schließlich die Grenzen des Ressourcenmanagements (durch sparsamen Einsatz, direktes Recycling und Aufbau von Lagerstätten).

CONTENTS

		Page
	ABSTRACT	VI
	ABSTRACT (deutsch)	VII
	TABLE OF CONTENTS	VIII
	LIST OF FIGURES	X
	LIST OF TABLES	XII
	LIST OF ABBREVIATIONS	XIV
1	**INTRODUCTION**	**1**
1.1	On Phosphorus and the Motivation	1
1.2	On Phosphorus and Scarcity	5
1.2.1	The two unknowns: Future Demand and Future Reserves	5
1.2.2	Scarcity, economy, entropy	8
1.2.3	Phosphorus and sustainability	13
1.3	On Phosphorus and Material Flow Analysis	16
2	**PURPOSE OF THE STUDY**	**18**
2.1	Methodological Goals	18
2.2	Hypotheses	19
2.3	Goals and Principles of Phosphorus Management	20
2.3.1	Global Phosphorus Management	22
2.3.2	Regional Phosphorus Management	22
2.3.3	Phosphorus Management in Agriculture	23
2.3.4	Phosphorus Management on Agricultural Soil	24
3	**METHODOLOGY**	**25**
3.1	Analysis	26
3.1.1	Material Flow Analysis (MFA)	26
3.1.2	Model Design ‘MFA for P’	29
3.1.3	The Sources and the Handling of Data	32
3.2	Evaluation	34
3.2.1	Definitions	35
3.2.2	Comparative Assessment	38

3.2.3	Management Model	38
3.2.4	Measuring Performance	40
3.2.5	Long-term Management	42
3.3	The Case Studies	43
4	**RESULTS**	**45**
4.1	Material Flow Analysis for Phosphorus	45
4.1.1	System Definition	46
4.1.2	Agriculture	49
4.1.3	Industry	69
4.1.4	Household	83
4.1.5	Wastewater Management	91
4.1.6	Waste Management	99
4.1.7	The Regional Material Flow Analysis for the Countries	105
4.1.8	Regional Phosphorus Stocks	107
4.2	Evaluation of the Material Flows	116
4.2.1	Comparison of per capita Flows	116
4.2.2	Hinterland Use of Phosphorus	125
4.2.3	A System for Management	131
4.2.4	Measurement of the Management Performance: Indicators	135
4.2.5	Status Quo Comparison and the Indicated Management Need	136
4.2.6	Scenarios and the Long-term Management	140
5	**DISCUSSIONS AND CONCLUSIONS**	**158**
5.1	Conclusions on the Method Used	158
5.2	Conclusions on the Results Obtained	165
5.3	Areas of Further Study / Next Steps	171
6	**SUMMARY**	**172**
	REFERENCES	**177**
	APPENDIX A	**187**
	APPENDIX B	**201**

LIST OF FIGURES

		Page
Figure 1.1.	Average P-flux in nutrition (balanced for the Swiss society)	3
Figure 1.2.	World P-rock production over time	6
Figure 1.3.	US P-rock unit value over time	11
Figure 3.1.	The regional MFA with the flow numbers (1st level)	27
Figure 3.2.	Agricultural sector with the flow numbers as an example for the 2nd level MFA	27
Figure 3.3.	Design of the Proxy System with the flow numbers representing goods	39
Figure 4.1.	The regional MFA	46
Figure 4.2.	The Material Flow Analysis for the subsystem 'agriculture'	49
Figure 4.3.	Fertiliser Import-Export, Production-Consumption Trends for Turkey and Austria	50
Figure 4.4.	Input and output of animal production from phosphate balancing studies in different countries	51
Figure 4.5.	Methods used for calculating manure	52
Figure 4.6.	'Animal production' process in Austrian and Turkish Agriculture	53
Figure 4.7.	The input and output flows associated with the process plant production.	59
Figure 4.8.	The classification of the agricultural soil for the purposes of this study	65
Figure 4.9.	Balancing the agricultural soil	67
Figure 4.10.a.	P-balance in agriculture, Turkey, 2001	68
Figure 4.10.b.	P-balance in agriculture, Austria, 2001	68
Figure 4.11.	The conceptual framework for the subsystem ITCT as a starting point for balancing	70
Figure 4.12.	The Material Flow Analysis for the subsystem ITCT	70
Figure 4.13.a.	P-flows through the ITCT, Turkey, 2001	80
Figure 4.13.b.	P-flows through the ITCT, Austria, 2001	81
Figure 4.14.a.	P-balance in industry, Turkey, 2001	82
Figure 4.14.b.	P-balance in industry, Austria, 2001	82
Figure 4.15.	The Material Flow Analysis for the subsystem household	83
Figure 4.16.	Flows of goods, on which dietary information can be found, or estimated.	85
Figure 4.17.	Flow of food, food dry matter and phosphorus contained in food through private household.	87

Figure 4.18.a.	P-budget in household, Turkey, 2001	90
Figure 4.18.b.	P-budget in household, Austria, 2001	90
Figure 4.19.	The Material Flow Analysis for the subsystem 'wastewater management'	91
Figure 4.20.a.	P-balance in wastewater management, Turkey, 2001	98
Figure 4.20.b.	P-balance in wastewater management, Austria, 2001	98
Figure 4.21.	The Material Flow Analysis for the subsystem 'waste management'	99
Figure 4.22.a.	P-balance in waste management, Turkey, 2001	104
Figure 4.22.b.	P-balance in waste management, Austria, 2001	104
Figure 4.23.	Regional Phosphorus Metabolism of Turkey- 1st level analysis	105
Figure 4.24.	Regional Phosphorus Metabolism of Austria- 1st level analysis	106
Figure 4.25.	Estimations of phosphorus stocks in the regions and their concentration ranges	114
Figure 4.26.	Estimations of per capita phosphorus stocks in the regions and the concentration ranges	115
Figure 4.27.	Per capita flows in agriculture	117
Figure 4.28.	Per capita flows in ITCT	118
Figure 4.29.	Per capita flows in household	120
Figure 4.30.	Per capita flows in wastewater management	121
Figure 4.31.	Per capita flows in waste management	123
Figure 4.32.	MFA representation of the P-rock use in the hinterland	126
Figure 4.33.	Definition of the proxy system designed for the national P-management	131
Figure 4.34.a.	The Proxy System for the management of P flows, quantified for Turkey	134
Figure 4.34.b.	The Proxy System for the management of P flows, quantified for Austria	134
Figure 4.35.	Primary resource import over time in each of the three scenarios.	141
Figure 4.36.	Scenarios following each other as three consecutive periods	141
Figure 4.37.a.	The Proxy System for Scenario 1, quantified for Turkey	144
Figure 4.37.b.	The Proxy System for Scenario 1, quantified for Austria	144
Figure 4.38.a.	The Proxy System for Scenario 2, quantified for Turkey	150
Figure 4.38.b.	The Proxy System for Scenario 2, quantified for Austria	150
Figure 4.39.	Useful stock generation during the T_1 period of Scenario 2	151
Figure 4.40.	The Proxy System for Scenario 3	155

LIST OF TABLES

		Page
Table 3.1.	The three-level MFA approach	26
Table 3.2.	The numeration of flows used in the 'MFA for P'	28
Table 4.1.a.	Manure in TR, 2001/ based on (Zessner et al.)	54
Table 4.1.b.	Manure in AT, 2001/ based on (Zessner et al.)	54
Table 4.2.a.	Manure in TR, 2001/ based on Sibbesen	55
Table 4.2.b.	Manure in AT, 2001/ based on Sibbesen	55
Table 4.3.	Phosphorus associated with the manure vs. animal densities	56
Table 4.4.a.	Turkey, required fodder P, based on the recommendations	58
Table 4.4.b.	Austria, required fodder P, based on the recommendations	59
Table 4.5.	Crop production and associated P removal from soil in Austria and in Turkey	61
Table 4.6.	Inland fodder production and the associated P-removal from soil	62
Table 4.7.	Land Use 2001	63
Table 4.8.	Average annual P fertiliser consumption (kt P /a)	63
Table 4.9.	Annual phosphorus loss from the soil through runoff and erosion	64
Table 4.10.	Imports, exports, production and consumption of phosphates in 2001	72
Table 4.11.	Detergent use and the associated phosphorus consumption in the household	74
Table 4.12.	Fodder-P in the by-products from the industry (Data for 2000)	75
Table 4.13.	Imports and exports of fodder	76
Table 4.14.	Estimation of net imports of unmilled cereals as fodder into Austria in 2001 (kt)	77
Table 4.15.	Food Import & Export, and the associated P-flows in Austria and Turkey, 2001	78
Table 4.16.a.	Imported exported amounts of other phosphates, Turkey, 2001	79
Table 4.16.b.	Imported exported amounts of other phosphates, Austria, 2001	79
Table 4.17.	Foodstuff available for consumption in Tr and At, and the associated P-flow	84
Table 4.18.	Purchased foodstuff in households for Turkey and the associated P-flow	86

Table 4.19.	Intake of foodstuff for Austria and the associated P-flow	86
Table 4.20.	Phosphorus inputs and their partitioning into outputs through the household, 2001	89
Table 4.21.	Average P-concentrations in the wastewater of some European countries	92
Table 4.22.	Generated and collected amounts of wastewater-P from domestic sources	93
Table 4.23.	P-Flows in municipal wastewater treatment	96
Table 4.24.	The fate of sludge-P with the output goods of 'Sludge Treatment' in 2001, t P/a	97
Table 4.25.	P contents of the main waste flows, 2001	101
Table 4.26.	P-flows through waste treatment	102
Table 4.27.	Estimation of the forest phosphorus stocks	108
Table 4.28.	Estimation of the above ground P-stock in agriculture	109
Table 4.29.	Estimation of the P-stock in zoomass	109
Table 4.30.	P-stock in manure	109
Table 4.31.	P-Stock in municipal waste and municipal sludge	110
Table 4.32.	P-Stock in the agricultural topsoil	111
Table 4.33.	Land-cover in Turkey and Austria	112
Table 4.34.	P-Stock in the pedosphere	112
Table 4.35.	P-contents of different ashes given in the literature	113
Table 4.36.	Average per capita flows of the MFA for P	125
Table 4.37.	Calculation of the hinterland consumption of P	130
Table 4.38.	P-management indicators for the Status Quo	138
Table 4.39.	The 'useful' secondary resource potential available for recycling under Scenario 1	147
Table 4.40.	P-management Indicators for the Scenario 1	147
Table 4.41.	P-management Indicators for the Scenario 2	152
Table 4.42.	P-management Indicators for the Scenario 3	157
Table 5.1.	A comparison between Turkey and Austria over their P-metabolisms	166
Table 6.1.	Highlights from the Analysis and Evaluation Parts of the Study	174

List of Abbreviations

Agr: agriculture

Adv: advanced wastewater treatment

At: Austria

Animal prod: animal products

Imp: import

Inc: incineration

Exp: export

ITCT: Industry-Trade-Commerce-Tourism

Lfill: landfill

MB: mechanical-biological treatment, wastewater

MBT: mechanical-biological treatment, waste

MunHhWaste: municipal household waste

MunHhWw: municipal household wastewater

MunIndWaste: municipal industrial waste

MunWw: municipal wastewater

Tr: Turkey

P: phosphorus

P raw & fert: P in phosphate rock (concentrates) and in fertilizers

Plant prod: Plant products

S: stock

S^+, S^- : annual stock change

ΔS_n: stock change in n years

Sl to Wman: sludge to waste management

Sld+Cpit to env: Sludge and cesspit residuals heading to the environment

Ww to Cpit: wastewater to cesspit

1 INTRODUCTION

The problem and the motivation are introduced in this part with three sections. In Section 1.1 phosphorus is presented as a vital resource and the main problems involved in its use are explained. Here, the scope of the study is roughly determined too. In Section 1.2 the scarcity concept, phosphorus scarcity and the effect of this on the sustainable long-term use of the resource are defined and discussed. Section 1.3 is on the past Material Flow Analysis (MFA) works involving phosphorus flows. MFA is also the main tool used in this study.

1.1 On Phosphorus and the Motivation

Phosphorus (P) is essential for life as a macronutrient and the second most abundant mineral in human body. Despite its importance there are low concentrations of P in the nature: It is supplied through the weathering and dissolution of rocks and minerals with low solubility. Therefore, phosphorus is usually the limiting element for animal and plant production and throughout the history of agricultural production, phosphate has been in short supply (Steen, 1998). So, it must be provided as an external input for sustained crop production and to feed the world population (IFDC, 1998). In agriculture, P is derived from the soil with the harvest and replenished through mineral fertilizer application. It is the most expensive of plant nutrients applied to agricultural soils, i.e. it is scarce in economic terms. Besides the resource is depletable. At the moment the most economic way of obtaining phosphorus is the extraction from phosphate rock. Up to 80% of the total consumption of phosphates is used worldwide as mineral fertiliser. The balance goes to the production of detergents (12%), animal feeds (5%) and speciality applications (3%), like food additives, metal treatment etc (Steen, 1998).

Apart from its importance for life, there are other properties of P which motivate its careful management. P is different from other minerals like metals (except for some micronutrients), because it can not be substituted, but is necessary for the continuation of life as a macronutrient. It also differs from other non-renewables like fossil fuels; P is not fully used up after consumption, but is recoverable to some extent. P distribution around the world and over time in a long-term is important for the global welfare. It directly affects food security. Therefore, myopic management of it may have severe consequences. A long-term perspective is necessary to notice and to mitigate the impacts of increasing scarcity. The chemistry of this

inorganic substance with no gaseous form allows its management in the anthroposphere, meaning a more efficient use is possible to attain.

There are two main problems concerning P: Environmental pollution and resource depletion. These will be explained here and they make up the two pillars of the method developed throughout the study.

A couple of environmental problems are related to the use of P-resources. The most important and obvious one comes out in the form of eutrophication -changes in water bodies involving excessive biomass growth, water quality reductions and dissolved oxygen depletion. This is due to the enrichment of receiving waters with nutrients like carbon, nitrogen and phosphorus. Neither carbon, nor nitrogen elimination from wastewaters proved to be enough to control eutrophication. Certain micro-organisms have the ability of using inorganic C (autotrophs) and fixing atmospheric nitrogen. Therefore, being in minor amounts in the algae structure, P becomes a limiting element for eutrophication in many ecosystems, and the key element for eutrophication control. Point source control of P in wastewaters has been achieved after technologies like chemical precipitation and enhanced biological P removal were developed, rehabilitating and protecting many water bodies since then. On the other hand, the use of P causes other kinds and forms of pollution as well beside the direct P discharges into receiving bodies. For example, P-rock mining and production of P-concentrates generate phosphogypsum and other pollutants, or application of some fertilizing media on agricultural soils can cause accumulations of hazardous substances. Also, diffuse pollution of P is created, especially if agricultural soils are enriched with P and overloaded with manure phosphorus. As diffuse sources are difficult to control, this last point renders point source control of eutrophication insufficient too. Some of the many ways suggested to control diffuse pollution of P are farm level P balances, animal fodder and manure management, preventive fertilising techniques, reduction of erosion etc. So, point source control in the form of wastewater treatment on its own is not enough to prevent eutrophication. Besides, this process creates by-products, which are also rich in P and which require further management. The amount of sewage sludge produced in the EU is around 9 Mio t DM[1]. The disposal of it is problematic. Indeed, recent regulations favour neither land application nor landfilling of sludges in Europe. Therefore utilisation of sewage sludges is pushed forward also considering the valuable

[1] European Communities, 1995-2006

nutrients in them. Agricultural use of sludges has been practiced for a long time to dispose of the sludge cheaply while fertilising and conditioning the soil at the same time. Environmental concerns lead then to regulating the sludge application on fields. These were related to application rates based on the annual or cumulative heavy metals application, to soil characteristics or directly to the sludge quality parameters. Erosion and the lower, P-based application rates seemed to reduce the accumulations in the plough layers of agricultural soils giving way to sludge application on land, yet the revelation of trace organics and endocrine substances rendered that disposal route dangerous. According to the principles of waste management, disposal should be done in final storage quality, which would pose no hazard to human health and keep the pollutants aside and stable ultimately (AWG, 2002). Yet, putting sewage sludge into such traps would mean losing all valuable nutrients in them infinitely.

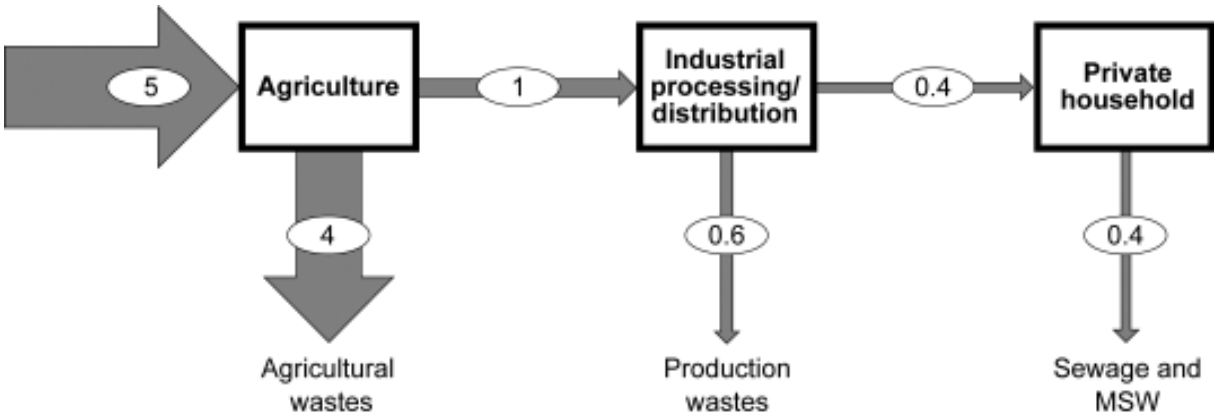

Figure 1.1 Average P-flux in nutrition for the Swiss society, in kg/capita and year. (From Baccini, P. and Brunner, P.H., Metabolism of the Anthroposphere, Springer, New York, 1991. With permission.)

The second problem related to P is resource depletion, as it is an essential and non-substitutable mineral. It is often claimed that existing reserves would only last for some 80-100 years. Thus, the depletion of phosphate reserves is linked to the sludge problem above as well. According to this recycling/recovery from sludges would cycle nutrients back to the system and help to prevent scarcity. So far, well-intended attempts towards recycling and recovery of P in sludge have not been successful, as the amounts involved were low, and the costs incurred high. Figure 1.1 shows the P-flows in the activity nutrition, taking agriculture, industry and private household as black boxes, balanced for the Swiss population. The picture makes the throughput in the system evident with the largest loss occurring in the production of agricultural goods. It also reveals the amounts ending up in wastes and wastewater coming from households through the consumption of food, and enables the comparison to the input as fertilizers. In case of this non-renewable resource, it becomes clear that recycling / recovery

of household wastes as a solution can not prevent P from getting scarce, nor can these prolong the life-time considerably if the inefficiency of P-use in agriculture remains as it is.

The sludge disposal problems and technologies being developed for recovery purposes attracted attention to other potential secondary resources of phosphorus as well. To this end, the problem needs to be carried to a different level: A resource dominated, long-term look should be created instead of deciding under the immediate pressure of disposal needs. Considering that the high grade P-ores will get scarcer, this is a more efficient way of defining strategies, and would bring out different solutions than the short-term look provides. For this, the problems of waste and resource management should be combined in a comprehensive system analysis. Stocks and flows must be studied before planning the nutrient management for a certain region with its own anthropospheric metabolism, so that priorities are determined for the whole regional system in a coordinated way, instead of on some part of it.

This study integrates resource management with waste management using Material Flow Analysis (MFA) on a national scale. Firstly P is treated as a pollutant. Eutrophication is a problem, which deteriorates water bodies. However, determining specifically the extent of the eutrophication thread posed by the P-management of a country is beyond the scope and the intention of this work. This has three reasons: 1. The study focuses more on the resource use efficiency and the resources in wastes rather than the emissions, 2. The national scale of the MFA established is not detailed enough to model the many water bodies of a country, 3. Uncertainties concerning diffuse emissions are so high, that total annual P-flow from a whole country into water bodies needs another study on its own, and easy to estimate point sources make up a small part of the problem ever since P-elimination from wastewaters takes place. Therefore, water pollution causing eutrophication is not directly estimated. The emphasis is on the amount of P in losses, managed and unmanaged wastes. Having a long-term look, it becomes clear that almost all uncontrolled wasted P ends up in water bodies, while some of the controlled waste flows also do so depending on their being in proper final sinks or not. Therefore, the potential pollution of P is determined in this work. Besides not specifying the water pollution at the back end, the study does not include the mining wastes problem at the very front end either. The losses of P from mining are not known. Other pollutants from phosphate processing are also out of the scope of this work, as it uses a substance flow analysis on P. Secondly, the study treats P as a virgin (primary) and a waste (secondary)

resource. Here, conservation and so the intergenerational equity are key issues. Reuse of valuable resources contained in waste make up one of the most important challenges in waste and resource management today, just as the optimal use of virgin resources does. Before making decisions or assuming strategies on P recovery and recycling, the flows involved in the metabolism of the region must be known. In this study, P stocks- both natural and man-made, existing and potential- are given special emphasis to lead such decision making, and the metabolisms of two countries, Austria and Turkey, are compared in this respect.

1.2 On Phosphorus and Scarcity

1.2.1 The two unknowns: Future Demand and Future Reserves

Scarcity of P resources is a long debated issue. When shortages of P will occur in the market cannot be said so far due to big uncertainties in three variables: The global P-demand over time, the size of the global P-resources, and the technological improvement. According to Klindworth (Klindworth, 2000) markets for fertilizer products are global in scope due to the geographical concentration of the natural resources. This is certainly the case for P, as almost all phosphate reserves are concentrated in few regions like Morocco and Western Sahara, Russia, United States, South Africa, China and Jordan. Production (P-rock) up to 72% comes only from the 4 regions United States, China, Western Sahara, and Russia (FAO, 2004).

There is much to say on the first variable, the demand and its change over time. Looking at the past trends on P-fertilizer demand, rough estimations can be made, on how future demand would evolve. Developing and developed countries have opposing trends in their future demands for phosphorus.

Before discussing the phosphate fertilizer situation in particular, the evolution of fertilizer demand in general should be discussed. IFA and UNEP (IFA/UNEP, 1998) explain the phenomenon for the evolution of fertilizer use in three stages, all of which can take decades: 1. The introductory period, where only most productive farmers use fertilizer, 2. The take-off stage, when the number of users and consumption grow rapidly, 3. The mature stage, where majority of farmers use fertilizers at rates which do no longer grow. Many industrialised countries are either in the second stage or have already reached the third stage, whereas the developing part is in the first and second. (IFA, 2002) data shows this clearly: In 1960

developed countries accounted for 88% of world fertilizer consumption, which by 2001 had fallen to 37%, although of a much larger total. In developing countries consumption in 1960 has been 12% of the world total, which increased to around 60% by 2001. This indicates that some developing countries have entered the take-off phase. Nevertheless, many others are still in the introductory period. According to (IFDC, 1998), trends and projections show that the increased need for agricultural intensification in Asia, Africa and Latin America will be the major source of expansion in demand for P fertilizers in the first two or three decades of the 21st century, whereas environmental concerns will cause a decline in the demand for P fertilizers in Western Europe and possibly in North America. On the other hand, in a number of developing countries mining of soil fertility is still taking place. Especially in sub-Saharan Africa the yearly loss of nutrients is leading toward critical impoverishment (Smaling, 1993). Regions like Sub-Saharan Africa are in the first, introductory stage explained above concerning their use of fertilizers. According to (IFA/UNEP, 1998) in many developing countries fertilizer imports account for an important share of foreign exchange spent. (Sanchez, 2002) adds to that, pointing at the price variations: fertilizers in Africa cost two to six times as much as those in Europe, North America or Asia. Yet, it must be given a high priority, because as costly as fertilizer imports may be, the corresponding food imports would be even more costly. Food imports can be a constraint on the national agricultural economy, and raise food security concerns (IFA/UNEP, 1998).

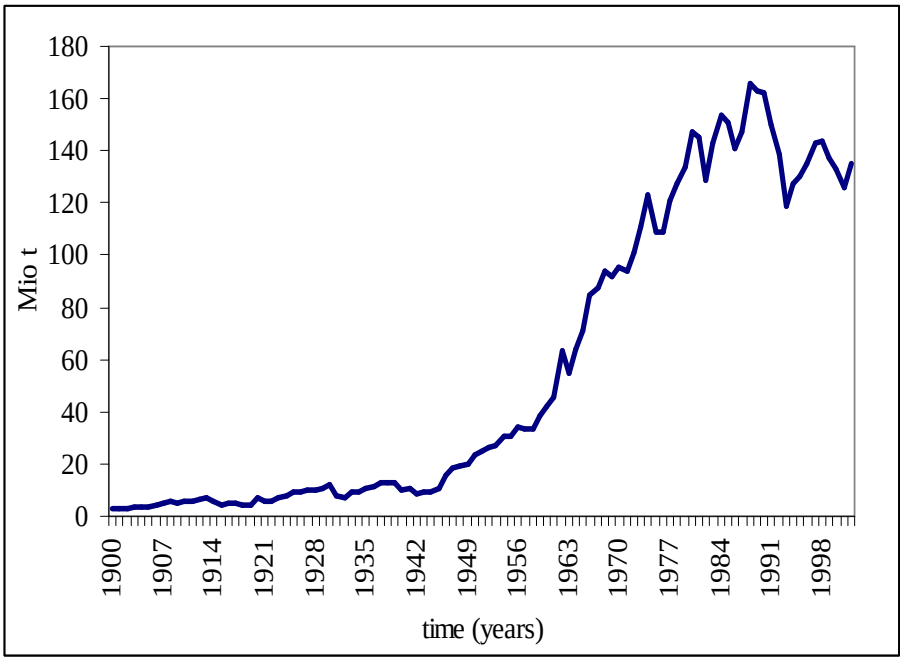

Figure 1.2. World P-rock production over time (USGS, 2004)

The general pattern applies to P. Developing and developed countries have markedly differing problems concerning P. The former still have low P-concentrations in the agricultural soil, which is reflected by their fertilizer imports (IFA, 2005), whereas the latter are coping with the consequences of excessive use, accumulations in the agricultural soil and environmental pollution. The reasons for increasing P-fertilizer use in the developing countries can possibly be listed as follows:

- P-deficient agricultural soils (insufficiency, need)
- Population increase
- Shifts in diet (towards meat also in Asia- meat based diet important source for P inefficiency)

Whereas the reasons for the levelling off in P-fertilizer consumption in the developed countries could be:

- P-saturated agricultural soils (excess, inefficiency)
- Stable population, economy, and production
- Environmental pollution

Concerning the second variable, i.e. the size of the global resources, data on currently economic reserves and estimations on the resource base are published in several studies. Based on these, widely varying life time estimations are made, ranging between as little as 80 years (Wagner, 2003) and as high as 600-1000 years (Johnston and Steén, 2000; Goeller and Weinberg, 1976), with many other, different estimates in the range, depending on which resource stock is taken into calculation (reserves or reserve base).

Static Reserve Indices are calculated by dividing currently economic reserves by the current demand to find out the number of years where existing reserves would be available. They do not consider future changes in demand or in the reserve size (which can increase as well as decrease). The phosphate industry plans for the next 30 years concerning reserves and predicts future demand generally for the next 5 years. This mostly serves the purpose of adjusting output and is not meant for ensuring the raw material availability in the long run. Models predicting the future phosphate demand are provided by (Steen, 1998) and (IFDC, 1998). The former used a linear, the latter exponential growth rates to predict the future demand for P-fertilizers, until 2070 and 2025 respectively. It has also been discussed whether increase in the demand to phosphate rock would be equal to, less or more than the population increase rate. Indeed the ‘bioessential nutrient replacement’ use of phosphorus is directly

linked to the population and its growth. (Herring and Fantel, 1993) provide a longer term demand forecast (2150) for phosphate discussing also the growth rate in detail, using, linear, exponential, and even stabilizing demand curves under different scenarios. Their depletion model takes reserve and reserve base separately into account, i.e. "consider the global economics of mining". As a conclusion, they claim that the world has indeed immense phosphate resources, yet within the next century all known low-cost reserves and much of the known high cost reserves will be depleted.

P is a product in the global market, which is imported to most countries. Its scarcity in a long term depends on numerous factors. As explained above, the long-term physical availability / scarcity of the resource is not possible to predict in a reasonable way, as long as the geological information on P is not complete with all the global resources and their grades. The scarcity of P and to a certain extent the depletion are both affected by the technology and the technological improvement as well. Explorations are costly and only done when existing reserves shrink in size and worsen in quality, not for planning periods longer than 30 years. Exploration is an economic parameter, which is controlled by the market. So are the reserve definition and the demand determined in the market. As price will be most influential on the availability or scarcity of a resource, notions from resource economics, 'the economic scarcity' should be understood first.

1.2.2 Scarcity, economy, entropy

From a natural sciences point of view the (physical) scarcity depends on the size of the resource stock and the consumption. Both of these parameters are linked to and influenced by the technology, where technology is used in its wider meaning and does not only refer to the mining or extraction technologies.

Above, the physical scarcity of the P-resources was treated to some extent by explaining the two parameters, the demand and the reserves. One measure for the physical scarcity is the life-time of the reserves. It does not show the real scarcity, but may indicate the need for explorations or for a substitute. As already stated, reserve definitions depend on price, and substitutes can be found at higher prices of a resource. Increased price could lead to explorations or technology might reduce costs. Such an uncertainty in resource scarcity simply prevents giving a sound answer to the question 'When will humanity face P

exhaustion?' A rough estimation would help solving the P-management problem optimally for this period, so that societies would be prepared and possibly choose to adapt to new management schemes knowing what is going to come. However, there is an order of magnitude difference in lifetime estimations, varying from 10^2-10^3 years. As mentioned before, the gap in the geological knowledge leaves much space to assumptions concerning the size of the resource stock and different stock definitions are used in each model. On the other hand, the term depletion has different usages too. According to UN depletion is "For renewable resources, the part of the harvest, logging, catch and so forth above the sustainable level of the resource stock; for non-renewable resources, the quantity of resources extracted" (UN, 1997). This refers to the use of a natural resource faster than it is replenished, which equals in case of non-renewable resources to the amount consumed. According to Tilton (Tilton, 2002) however depletion is not a question of the physical availability of the mineral resources, but rather of costs.

Economics is the science of allocating scarce resources. According to this, all resources or anything which has a price is considered scarce. However, the scarcity and growth debate has been more on the increasing (decreasing) scarcity (availability) of resources. It was Malthus` claim on scarcity being inevitable, which attracted probably the first attention to the 'natural resource' limits of growth. In the early 19th century, Thomas Malthus (Malthus, 1803) had projected that the population growth was incompatible with the increase in food supply, the former being exponential, the latter linear and limited by the agricultural land. The Limits to Growth (Meadows et al., 1972) opened another period of popular discussion about the resource limits on economic growth after a long lasting silence on the subject. Their argument was, that arable land, energy, minerals and the carrying capacity of the environment were limited, which can not support the economic growth as it is for a long time, so that a collapse was inevitable. In their scenarios depletion of non-renewable resources was strongly influential in this collapse. The study has been criticized on its apocalyptic results. Yet, there was also the other extreme contending that there is no problem at all concerning the future resource scarcity posing constraint on growth. Julian Simon popularised in 1980's his view on human population being the ultimate resource: Resources are only limited by the abilities of the humanity given the freedom to create and express, he stated. Some also claimed that depletion was a physical phenomenon, and that economically, resources were infinite. The dispute has been between conservationists (neo-Malthusians), and those leaving the future

prosperity to market mechanisms, which in the past successfully avoided the scarcity problem through demand changes, technology, substitution, and so on.

In order to be able to talk about future availability of resources some measure is necessary. There are three economic scarcity indicators, which could signal the increasing scarcity: The market price, the extraction cost and the user cost (shadow price) of the resource (A comparative analysis of these supported by precious empirical data can be found in (Tilton, 2002)). All of these represent different aspects of the depletion, yet an increase in any of them would indicate that scarcity is increasing. They are interconnected: '$p = c + \lambda$' means that the market price (p) is the sum of marginal extraction cost (c) and the user cost (λ). The intuition is simple: For a reproducible good the optimum amount of production is determined where '$p = c$'. In case of a non-renewable, the user cost, λ, should additionally be charged by the resource owner as the foregone future profit: Once having extracted one unit of a non-renewable resource, it is gone forever, i.e. production today prevents production in the future contrary to reproducible goods, and λ is the opportunity cost for this. Market price (p) is the most obvious indicator of all. It is easy to reach data, but difficult to interpret, as it can be affected by changes of both c and λ, plus by market imperfections. The advantage of using p is that it can anticipate future scarcity. Extraction costs increasing could indicate diminishing returns on labour and capital input or reduced ore quality in case of minerals. However, technology generates the opposite effect reducing extraction costs, as it has been the case with most resources. User cost represents the value of the resource in the ground, i.e. the real value. An increase in the user cost would be the clearest and direct sign of increasing scarcity. The problem is that user cost is a hypothetical measure for which no direct data exist.

Even the answer to the question 'if the mineral scarcity has been increasing or not' is controversial. Econometric studies look at the past trends in resource price to check the empirical data against the theory and use models to project the trends into future. For many resources, price trends had a downward slope in the last century. The discovery and development of new reserves, the substitution of capital, and technological progress in resource extraction and commodity production caused this (Krautkraemer, 2003). That is to say, that the empirical data for natural resource commodities does not suggest increasing scarcity. Obviously, past predictions have systematically underestimated the technological progress. However, past successes are no guarantee of future success, Krautkraemer adds. As (Daly, 1982) puts it: "prices of resources naturally fall during an epoch of mineralogical

bonanza." The period is unprecedented, but production of some minerals has already reached peak levels. There is one further problem: The choice of deflator matters (Tilton, 2002). As the prices over time should be adjusted for inflation to be comparable, the deflator used influences the resulting trend as well, sometimes in a misleading way. Still, generally empirical studies did not show increasing price or cost trends for minerals.

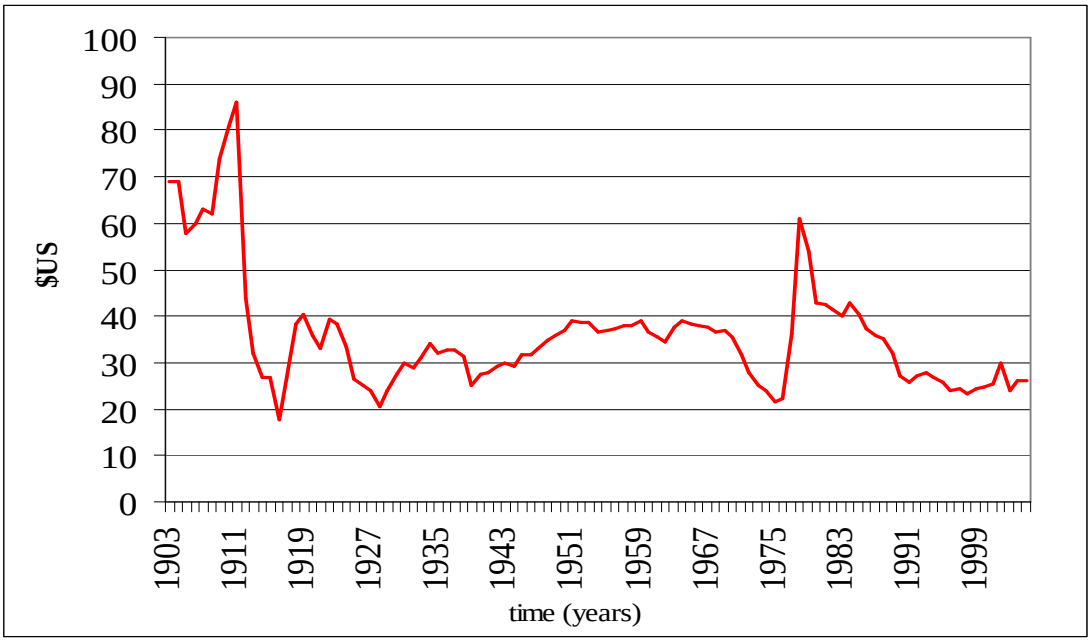

Figure 1.3. US P-rock unit value over time

In particular with P, Potter and Christy (Potter and Christy, 1962) showed that during 1870-1957 period real prices of P-rock deflated with PPI (Producer Price Index) fell. (Nötstaller, 2003) reports that the Moroccan phosphate rock price between 1985-2001 was stable at US$ 46 level, while the US P-rock price remained at US$ 20-30 in the same period with a slight increasing trend. Above, the change in unit value (value per one tonne of phosphate rock for the 'apparent consumption'. Apparent consumption defined as: sold or used P-rock + imports - exports) over time in the United States is shown, adjusted with Consumer Price Index taking 1998 as the base year (USGS, 2004). In this figure, two extraordinary periods are noticeable, the price increase of WW 1 period and the phosphate price bloom of 1970`s. Leaving aside these periods, it is not easy to answer the question, if phosphate got scarcer or not, without making thorough econometric analyses.

With many non-renewable resources scarcity could theoretically be overcome, in case it arises: There are those resources, for which the demand might fall or substitutes could be

found. Looking at P on the other hand, one has to deal with an essential resource, for which there will always be demand as long as life persists. P is additionally non-substitutable, meaning that scarcity can not be escaped through substitution. Recovery is technically possible, however the use of the resource in the agriculture, industry and households is inefficient, so that the recoverable amounts of the remaining P in individual waste streams is low. Furthermore, there are limits to increasing this efficiency. P concentrated in input goods gets widely diluted, and part of this dilution is inevitable. Daly points at the entropy increasing every moment, and shows that there are physical limits: Human resource can not affect the force of nature preventing this increase, he remarks (Daly, 1982). According to him, "If nature's sources and sinks were truly infinite, the fact that the flow between them was entropic would hardly matter. But with finite sources and sinks, the entropy law greatly increases the force of scarcity". All these show that efficient use or recovery can not prevent the depletion of the P-mines, but they could slow down this process.

At the moment the most economic way of obtaining P is the extraction from high grade (10-15 %) resources, which is the most concentrated form of the substance. Depletion of it occurs with the dispersion of the concentrated P in the environment during the use of it in various processes, where the term 'dispersion' represents the process of being scattered over a volume. While passing through the anthroposphere, the concentration falls down to low background concentrations (0.1-0.2 %), at which the substance is abundant, but not in a consumable form. The problem is then, a grade problem, or the scarcity is a scarcity of the low entropy. Technological progress in mining could extract the lower grade ores to reasonable costs in the future. The question is, how long the P-content of these low-grade ores could sustain life, as the amount of P-rock (say, 1 or 2 %) necessary to produce relevant amounts of concentrate is simply too high. Supposing that a technology in the future could extract P from the lowest background concentrations, there would hardly be any problem: Using up high grades would not bring about value depreciation; P could even be seen as a non-depletable resource, posing no constraint on population growth and maintenance. With sufficient energy complete recycling would be possible. (Biancardi et al., 1993) states that such expenditure of energy would involve a tremendous increase in the entropy of the environment, which would be unsustainable for the atmosphere. (Goeller and Weinberg, 1976) investigated a similar point through studying the earths crust for many elements. Assuming a renewable energy source for extracting minerals, while the lowest grades of them could be extracted, they concluded that minerals are generally inexhaustible in the earths

crust. Concerning P however, they warned, that if the society would have to rely on the low background P-levels, agriculture would be intolerably costly thus reducing life standards, even with a renewable energy source. A simple calculation helps the intuition: In order to supply only the mineral fertilizer input (27 kt P in 1995) to the domestic agriculture in the Netherlands, to end up with a material as concentrated as the P-rock, annually 20 km^2 of ordinary soil, with 1 m depth would have to be concentrated 100 fold (Ordinary soil P concentration 0.1 %, density 1.5 t/m^3). That is to say, if the future will still be relying on high grade P-ore, the scarcity of P would pose big pressure on humanity. Recycling is only partially possible. The overall recyclable amount of P or the additional life time generated depend firstly on the long-term resource use and secondly on the long-term waste handling strategies.

Technological progress could overcome many problems such as: Lack of comprehensive scientific information on the resource base; lack of public opinion on the essentiality and the substitutability of the resource (both of which create an information related market failure affecting the determination and the change of price); the inefficient use of the resource in the production processes, as well as the life-time limits of the existing reserves. Various technologies can contribute to the solution of such problems related to resource use, by creating positive or negative feedbacks on the price increasing effect of scarcity. As an example, revolutionising the extraction technology through harvesting P from the sea water would be a rewarding realisation of a biotechnological quest, and would increase the resource base enormously, if such bio-chemical processes could be generated and repeated under the natural conditions, producing relevant amounts of concentrated P and if the sea biota would tolerate this kind of extraction.

1.2.3 Phosphorus and sustainability

According to (Krautkraemer, 2003) the most recent renewal of concern over natural resource scarcity began in the mid- to late 1980s under the rubric of ‘sustainability’, and although the exact meaning of the term cannot be pinned down, it has powerful connotations about the ability of the natural world to support both the current and future population and economic activity. Sustainability is also used in relation to phosphorus. The term sustainable attached to the ‘P-management’ previously defined protecting the environment while increasing the agricultural product. Nowadays it is frequently referred to when the reduction of the

unsustainable throughput flows of P is meant. In this work, sustainable management of P focuses on the non-renewable character of the resource: Depletion of a non-renewable resource stock should not compromise future well-being. In this respect, the longest term availability of the useful resource stocks should be aimed at, while feeding societies of today and the future, and protecting the environment from P related pollution.

In the previous section empirical issues related to P demand and the economic scarcity were treated. Here, the theory underlying the 'non-renewable resource economics' will be explained. This theory named after Harold Hotelling (Hotelling, 1931) is the basic rule optimising the resource extraction over time (resource amount extracted in each period until the exhaustion), which maximises the benefit of the mine-owner. It was shown that the same extraction path also maximises the societal utility from the social planner's point of view. Later on, the intergenerational equity concerns about non-renewable resource use were related to this theory, and the theory was extended in many ways. The intergenerational equity version of sustainability will be the leading idea in this study as well.

Like physical/technical efficiency, the allocative (economic) efficiency in P-use would induce forces against fast depletion of the reserves. Economically the efficient path to extract a non-renewable resource over time requires that price-p- (marginal revenue) equals the sum of the marginal extraction cost-c- and the opportunity cost-λ- (or shadow price) of the resource in the ground, also called the user cost, royalty, or scarcity rent. Non-renewable resource theory incorporates λ into p, which, if duly collected by the resource owner, economically helps prolonging resource life-time. It is the amount charged in excess to the extracting and processing costs, which theoretically is the real, intrinsic value of the resource stock in the ground. It captures the idea that there is an additional cost for extracting a resource unit today as this prevents extracting it tomorrow. "The concept of resource rent is crucial because unless the resource managers charge close to the resource rent for others to extract the resource, the cheapness of the resource will induce excessive and reckless extraction. This is why low royalties on timber or mineral exploitation typically constitute a major natural resource policy failure" (Mirovitskaia et al., 2002). Hotelling's rule states that -under some restrictive assumptions- a unit of resource extracted in any period should yield the same rent in present value terms, i.e. the scarcity rent should grow at a rate equal to the rate of interest, in a perfectly competitive economy. If the value of the resource in the ground would be increasing faster than all other assets, i.e. at a rate higher than the prevailing interest rate, the

mine owner would keep the resource in the ground, expecting a higher profit from extracting in the future. If other assets' value increases faster, the mine owner extracts all the resource and turns into another asset at the soonest. So, the efficient allocation requires the resource rent increasing with the interest rate and society being indifferent between shifting a unit of extraction from one time period to another. This in turn requires a steady decrease in resource extraction, while the resource rent is increasing with the interest rate, until the resource stock is depleted (Hotelling's rule). Concerning P however, there is a minimum necessary P-requirement to sustain the world population.

That present generations consume more of the non-renewable resources than future generations will consume, and that this constitutes indeed economically the efficient solution, started the inter-generational equity discussion. Hartwick's (Hartwick, 1977) rule (investment is necessary to avoid decline) therefore deals with sustainable consumption in the presence of non-renewable resources. Aiming to keep the consumption over generations constant, he suggests that resource rents should be invested into reproducible capital in order to compensate for the reduction in the resource stock. This rule assumes, however, that man-made capital could substitute indefinitely for the non-renewable resource ('weak sustainability' allows substituting natural capital by the man-made capital, and passing this on), which is not the case for a non-substitutable essential resource like phosphorus.

Also for the essential, non-renewable resource P, the sustainable use is about satisfying the needs of the current generation (intra-generational equity), and of the future generations (inter-generational equity). However, the essentiality and non-substitutability of the resource necessitates the so-called 'strong sustainability' rule as the leading idea: Instead of depleting and converting it into capital stock or other form of substitute, some part of the resource must be passed on as it is to future generations. Therefore, the form in which P will be passed on matters. When the useful stock is depleted, life on earth can be heavily impaired. Non-substitutability means that there is no alternative to depletion. This property renders certain assumptions of the neoclassical approach to the depletion problem invalid when it comes to P.

Today the abundance and the quality of P-rock available to industry are already deteriorating. For example, 75% of the available phosphate are sedimentary rocks including relatively high Cd, while apatite is getting much less in proportion (SPO, 2001). There is also the phosphogypsum problem, due to which Western Europe tends to import phosphoric acid and

finished fertilizers instead of phosphate rock. With a long-term perspective, the question of (Goeller and Weinberg, 1976) is worth raising for the case of P as well: “How to avoid reaching a point where exploiting the remaining mineral deposits will be intolerably COSTLY…” Conserving the high grade and quality helps prolonging the resource life-time and passes on useful and affordable stocks. Such conservation campaign could involve besides decreasing losses and increasing the efficiency in use or production, also efforts towards direct or indirect recycling by creating useful stocks of secondary resources.

1.3 On Phosphorus and Material Flow Analysis

Material flow analysis (MFA) has become vital, ever since efficiency and long sight are required in the area of wastes and resources management. There are MFA studies which investigated the physical efficiency of P use and the P pollution. The study for the Bünztal (Brunner et al., 1990) in Switzerland and the one for the Kremstal (Glenck et al., 1995) in Austria provided substance flow analyses for P. More efficient use of the resource and the protection of the river from pollution are aimed at in these studies. The agricultural soil and P-accumulations on it, sources of emissions to the river were priority issues, and the potential for P recycling is questioned. That MFA could be applied not only to scales having an order of magnitude of 10^2 km^2, but also to scales having 10^5 km^2 area like the Danube River Basin was confirmed with the study “Nutrient Balances for Danube Countries” (Zessner et al., 1997). In this study, an international consortium worked in the establishment of P-balances for the Danube Basin. The aim was to determine the status quo of the P-flows, to find the problematic flows and to suggest strategies for the reduction of the nutrient emissions into the river Danube. The major sources of the nutrient emissions and the capacity of the receiving water were discussed before suggesting ways of improvement. Establishment of the water balance was a necessary part of the MFA, as the surface water pollution made up important part of the problem definition. Many measurements were done in creating the database for these studies. The engineering challenge for the MFA expert was to design systems which necessitate least amount of measurements to reduce costs (Brunner and Rechberger, 2004).

Other material flow studies showed the hotspots of P inefficiency in the societal metabolism as well (e.g. for Germany (Frede and Bach, 2003), and Pennsylvania (Saporito and Lanyon, 2004), as well as for Linköping in Sweden (Schmid Neset, 2005)). The latter was a PhD study

aiming to compare the resource use in the activity nutrition and its change over time, by quantifying an MFA model for the existing and historical nutritional habits and by comparing them. Another recently published PhD study (Liu, 2005) investigated the societal cycles of P for an efficient eutrophication control in China, where the P-throughput was increased during the big socio-economic transitions. The study combined the MFA carried out at national and regional levels with an environmental policy evaluation. It aimed "ecologizing the phosphorus flows and the future improvement of the eutrophication policy." These models allowed for the inclusion of related sectors and stakeholders, showing surpluses, inefficiencies, recycling potentials, they discussed the temporal changes in the food production-consumption systems of last centuries, and the geographic changes in the agricultural production over time, related to the phosphorus use.

This study introduces a national-scale MFA model applicable to different countries, by using statistical data collection and literature surveys, and without analytical measurements. To investigate the physical flows and stocks and their alterations, an MFA is established in the first part of this study. This is a descriptive model, which is based on an extensive data set. Then, the P-use performance of the region is assessed and ways of managing the resource in the long-term suggested. While doing so, the emphasis is on the non-renewable character of the resource and the inter-generational equity version of sustainability. Material Flow Analysis (MFA) enables the integrated management of resources and wastes. It suits as a tool for the analysis in this work because of the following reasons:

- Phosphorus is necessary for life, so, as a substance it has a vital role in the functioning of the societal metabolism. MFA proved to be a tool for investigating the metabolism of the anthroposphere, because it follows the mass balance principle,
- MFA provides the flexibility for partial alterations, like changing the transfer coefficients, which is important in designing scenarios in this study,
- Substitutions can not be modelled using MFA, but P is anyway not substitutable for its main use, and therefore MFA does not bring any disadvantage in modelling the use of this resource,
- MFA makes the substance level analysis possible, which is important for studying the depletion and pollution aspects. This helps classifying flows and stock based on their grades (concentration of the valuable substance), and allows for the approach used in this study.

2 PURPOSE OF THE STUDY

2.1 Methodological Goals

This study aims at developing tools for decisions about long-term resource use: definition of the necessary data, identification and treatment of data uncertainty, system design and establishment of evaluation methods.

The specific goals are:

- Collection of real life data to describe the resource use and waste management on a regional scale in the most precise way possible with uncertainties

- Development of an evaluation method with a wider scope in time and space, i.e. a long-term assessment extending over the regional borders

- Testing some resource and waste management strategies under different future scenarios and with respect to providing long-term solution to scarcity and pollution

The study seeks answers to the following methodological questions:

- What kind of a methodology could deal with the long-term management problem of a non-renewable resource? What are the criteria for such management?
- How to make the country-wide substance flow balance by using statistics? How should the systems be defined?
- What are the data sources?
- How to determine uncertainties and how to balance flows and stocks including uncertainty?
- What are the principles of P-management at various scales? What are the implications of these on the regional scale?
- How should the useful stock be defined and differentiated?
- How can the hinterland flows induced by the regional management be involved in the evaluation?
- How can the management performance be measured, compared, monitored in view of sustainability?

2.2 Hypotheses

Some hypotheses on the P metabolisms of the two regions were as follows:

1. Per capita phosphorus consumption of Turkey can be more than that of Austria, considering the continuing P-use as a builder in detergents. But the dietary habits in Austria (more meat based proteins) could balance off this difference. Therefore household wastewater may have a similar P flux. Similarly household waste should have similar P content per capita.

2. An alternative for conservation is the conservation after usage. A new management scheme for the wasted-P could conserve resources by prolonging the period of self-sufficiency.

3. Taking the hinterland pollution caused by the imports of one country under the P-management plan could affect the imported amounts. P-import would be reduced if environmental protection is aimed at even without the resource conservation concerns.

4. If the scarcity becomes binding, giving up the uses which are not necessary for the population to survive, such as builder for detergent or animal feedstuff could help getting over scarcity conditions until the subsistence level is reached.

5. In comparison to Austria, Turkey has the advantage of some P-reserves, which the country does not use at the moment due to the lack of economic feasibility. Austria on the other hand, based on its long fertilising history, has already a certain storage in agricultural soils. Economic considerations and the concerns over the water quality have led to reduced P-applications in the last decades. Turkey still increases the annual application of P. The soil stock in Austria and the reserves in Turkey would enable them to be self-sufficient for a long period even if the P-import to these countries ceases due to global scarcity.

2.3 Goals and Principles of Phosphorus Management:

This part introduces the goals and the principles for phosphorus management, which will guide the evaluation of P-flows and stocks in Chapter 4.2. They are determined at four levels: the global scale, the national scale, the agricultural sector and the agricultural soils. Results of some earlier work, together with the intuition gained from this study guided the choice of principles.

P is non-renewable and essential. In order to provide the necessary daily intake by humans, higher amounts are consumed in various processes of the anthroposphere. Accordingly, the corresponding amounts of high grade phosphate rock are extracted from a global stock, which has a limited capacity. So, the high grade ore will inevitably be depleted in the future. This is even more evident considering the current population growth of 1.7 % p.a. and the annual increase in P-fertilizer use at 2.5 % (IFA, 2002). Today vast areas of the world suffer from P-deficiency. The fact that there is no substitute for P implies that the humanity would have to extract the lowest grade and the lowest quality rock in the future, which can bring too high additional cost to food production making it unsustainable. This renders foresight and long-term management solutions necessary.

The following presumptions lead to the choice of principles for phosphorus management in this study:

1. Higher grade resource stock is always more useful than the lower grade resource stock:
   Independent of time or technological stage, higher grade stocks are more useful than lower grade ones, ceteris paribus. This is evident because the value of the stock lies in its P content and less of the stock has to be processed to gain the same amount of P. In this study, grade is chosen as the primary criterion determining the cost of using P, that is the affordability, among other reserve (= economically extractable P resources) characteristics.
2. Depletion occurs via the value depreciation of the non-renewable resource through consumption:
   Rather than using the classical definition, the term ‘depletion’ is defined here for the purposes of this study in a way which involves the management in the region. Here,

‘depletion’ describes a physical value depreciation of the non-renewable resource while passing through the anthroposphere. For P, depletion refers to a drain on high grade ore, and the dispersion of the secondary resource by the management of a region. (In the mine, ‘P-grade’ is used up through extraction, while in the region, P concentrated in goods is dispersed by consumption over time)

3. Depletion increases the cost of using primary resources in a long-term:

   Non-renewable resource economics brings the notion of increasing cost or price in case of increasing scarcity, as the high grade ore used is no more available for future use. This is also the case with P-resources. In the basic non-renewable resource model (Hotelling, 1931), the quality of the mine is assumed to be homogeneous, and per definition one unit of resource extracted is gone forever. Under these and some other assumptions, the theory says that the net price of the resources should increase over time with the interest rate (see Section 1.2). Similarly, this study considers depletion to increase the cost of using P. However here, contrary to the basic economic model, the resource neither gets fully lost after usage (for P) nor is it assumed to be homogeneous in the mine. A price increase in the future may occur in the form of higher extraction costs, higher environmental costs of extracting and /or simply the opportunity costs of using the non-renewable resource.

4. 100 % depletion of all P resource is ruled out:

   This presumption limits the scope of the long term investigation. Depletion of P resources in a way which reduces all existing mineral P to the geogenic concentrations is theoretically possible but beyond the scope of the long-term P-management aimed at in this study. (Such a case would probably pose a serious constraint on world population and life standards, even with the highest technology and unlimited energy). The background concentrations of P (~0.1 %) in the soil imply that this abundant, low concentration P could be useless if humanity had to rely on the ordinary rock. Here, only those goods and stocks will be considered as ‘useful’, which have concentrations at least one order of magnitude higher than the background, i.e. those having higher concentrations than 1 %. ‘Useful stock’ is studied in two grade categories: 1-4 % P, potential useful stock, and >5 % P, currently useful stock

5. Losses contribute both to depletion and to pollution:

   A potential for P pollution is created today and for the future through losses of P to the environment and through the soil P accumulation, respectively. Losses having high P

concentration such as losses of the fertilizer itself or other P-rich goods squander the limited resource, and are seen as a drain on the high grade, in this study.

As a result, the long-term evaluation of this study assumes that the 'usefulness' (the value) of the resource stocks can be judged by their grade (high grade representing the affordable resource), and it is this value which is depleted through the consumption of the resources. It must be added that all these are valid and defined for the 'mineral fertilizer use of P', and not the other uses.

2.3.1 Global P Management

P scarcity is a global problem. It is the global price of phosphate rock determining the spatial (intra-generational) allocation of the resource. Similarly, determining the global demand this price also controls the intergenerational allocation in the long-term. High quality reserves which are concentrated in a few countries are shrinking in size. Without a useful stock of P providing the function necessary in today's productive agriculture, it would be impossible to maintain the current global population.

The primary goal of phosphorus management is to feed the world population in the longest term possible without needing to reduce the quality of life and the environmental quality considerably. Thus,

-The sustainable P management in this study refers first of all to the intergenerational equity: "Depletion of the non-renewable mine should not compromise future well being." Based on the above presumptions on depletion, this means that useful stocks should be available to future generations.

-In protecting the environment from the P-related pollution, the emissions created elsewhere because of the imported goods to the region should be considered as well.

2.3.2 Regional P-Management

In this study, regional scale (country level) is chosen for the analysis and improvement of P-management. "The Metabolism of the Anthroposphere" (Baccini and Brunner, 1991) already

showed the inefficiency of P-flows through such a region. At the heart of this system, agriculture is the most inefficient process and losses in this part are remarkable. It must be noted, that these losses cause the dispersion of P in nature and only contribute to the problem of high entropy from the resource use point of view (and pollution from the environmental point of view). On the other hand, existing and potential stocks of P in a region point at the lack of low entropy in the system: Some of the stocks are already abundant in P, but few goods have concentrations higher than 1 % (Chapter 4.1, Figure 4.26). The potential for these concentrated forms in both countries is shown under scenarios.

- Successful regional management aims creating minimum possible depletion and pollution potentials, i.e. management actions can be directed towards reducing these potentials.
- Efficient P-management for a country (or in a region) necessitates taking anthropogenic goods and stocks rich in P into consideration
- Unnecessary dispersion of the substance should be avoided and P-rich flows should generate ‘useful stocks’. Low grade waste flows should be directed to final sinks

2.3.3 P-Management in Agriculture

The transfer coefficient in the agricultural production is the ratio of P in agricultural products and the P-input to the system. Animal production is inefficient with respect to P. This natural limit, together with the use of plant products (predominantly) as fodder, decreases the general overall efficiency of the system agriculture.

- In the sector ‘agriculture’ the lowest possible import of P and highest possible export of P should be aimed to increase transfer coefficients, while a P-balance in the agricultural soil is sought. That means the efficiency in the use of P-input must be increased and more plant-P than animal-P as output should be aimed at.
- The intensity of animal agriculture is not represented well enough by the general transfer coefficient or ‘P-efficiency of agriculture’ approach. In evaluating the agricultural management performance with respect to P-use efficiency, animal production and plant production need to be treated separately, as animal production has considerably low transfer coefficients than the plant production.

2.3.4 P-Management on Agricultural Soil

P is used to fertilize directly the agricultural soil, and only indirectly the plants. Soils having enough P-fertility need to be replenished with this nutrient after removing some of it through harvest. Otherwise, the phenomenon called ‘nutrient mining’ from the agricultural soil takes place. The problem already exists with wide-spread P-deficient soils of the world, where not enough fertilizer can be supplied to the soil. The larger part of the insufficient fertilizer-P applied becomes unavailable to the plants in this case, i.e. it is lost to the P-binding sites of the soil. Especially in the developing part of the world, where agricultural soils are not yet saturated with nutrients, soil fertility is a binding constraint for high productivities, even if biotechnological measures are taken: The potential of genetically improved crops for higher productivities cannot be realized when soils are depleted of plant nutrients (Sanchez, 2002). Soil fertility can indeed be increased by subsequent fertilizer applications with some positive balance, as has been well observed in developed countries. (Schnug et al., 2003) state the best management practice in order to increase the efficiency while reducing losses: P applied to the soil must be offered in soluble (available) forms and application should follow guidelines and in a way that balances the input and the output of P. P-fertilizer management is deemed ideal, if input is adjusted to the output as it is removed from the soil in the previous season. This means that applying slowly available forms on the one hand increases the dispersion of P, and so the entropy, on the other hand it causes an unmanageable stock in the soil having low availability to plants in short terms and leading to waterways through erosion in mid to long terms.

- Purpose of P application should not be increasing the soil stock (except for the soils having P-deficiency).
- Purposeful application and the best management of concentrated phosphate forms should be supported.

3 METHODOLOGY

In order to reach the methodological goals presented in Chapter 2, this study deals with the problem of long-term resource management by

A- Describing the regional metabolism for the resource at a substance level using the MFA technique

B- Designing a management model to measure

1- the environmental pollution potential of a region, both inland and in the hinterland posed by the studied substance, and

2- the resource depletion potential of the region by determining changes in stocks and by taking the physical depreciation of the resource through dispersion into account

C- Developing future scenarios to represent possibilities in long-term resource availability

D- Testing resource, secondary resource and waste management options under the above scenarios.

The following tasks were carried out in this study (Chapter):

- Establishment of purposes and principles for the management (2)
- Determination of the regional metabolism for the substance (4.1)
- Estimation of the 'unaccounted-for' flows and the 'hidden flows' in the system (4.1)
- Accounting for the uncertainty of the data (4.1)
- Determination of relevant regional stocks and useful stocks (4.1)
- Accounting for the hinterland consumption (4.1)
- Design of a management model which can be traced, monitored, and manipulated to develop scenarios in order to reach the goals of management (4.2)
- Definition of indicators on the management model in line with the principles, to evaluate P-management performance in terms of environmental protection and resource conservation (4.2)
- Development of scenarios on the long-term availability and for the long-term management of P (4.2)
- Testing of the resulting P-management schemes by using indicators to judge the performance of the resulting scheme (4.2)

3.1 Analysis

3.1.1 Material Flow Analysis

Material Flow Analysis (MFA) is a tool developed in 1980`s for the systematic assessment of the material flows and stocks within a system defined in space and time. The results of an MFA can be controlled by simple mass balances. This makes the method attractive as a decision support tool in waste and resource management. The investigated material can be a substance (elements or compounds) or a good, i.e. those substances or mixtures of substances having economic value. The basic MFA methodology and the terminology with the definitions of good, flow, stock, system, system boundaries and so on can be found in (Brunner and Rechberger, 2004).

In this study, MFA technique is used to develop a model for the coordinated management of relevant regional flows and stocks by bringing the front and back end together in one system description. It links resource use to waste production and helps designing scenarios which involve both resource and waste management. In this study, data collection, assessments and evaluation are done at three different levels (see Table 3.1). The systematic for the data collection and balancing at the second level is explained in the 'model design' part below. All details about processes and goods can be found under corresponding sections 4.1.2 to 4.1.5, as well as Appendix A.

Table 3.1. The three-level MFA approach developed in the study

Work Stage	**Level**	Function
Systematic data collection / Quantification of flows and stocks	**2nd**	Balancing of subsystems and estimation of unaccounted-for flows
Subsystems into processes / Overview of sectoral flows and stocks	**1st**	Determining transfer coefficients in the regional metabolism
Evaluation with key flows and stocks	**0th**	Widening scope, estimation of hidden flows, managing, monitoring

Assumptions in MFA: consumption in stock = 0, losses determined through balancing.

The numbering of the flows on system pictures is shown in the Figures below at the first level (Regional P Balance), and second level systems (agriculture as an example).

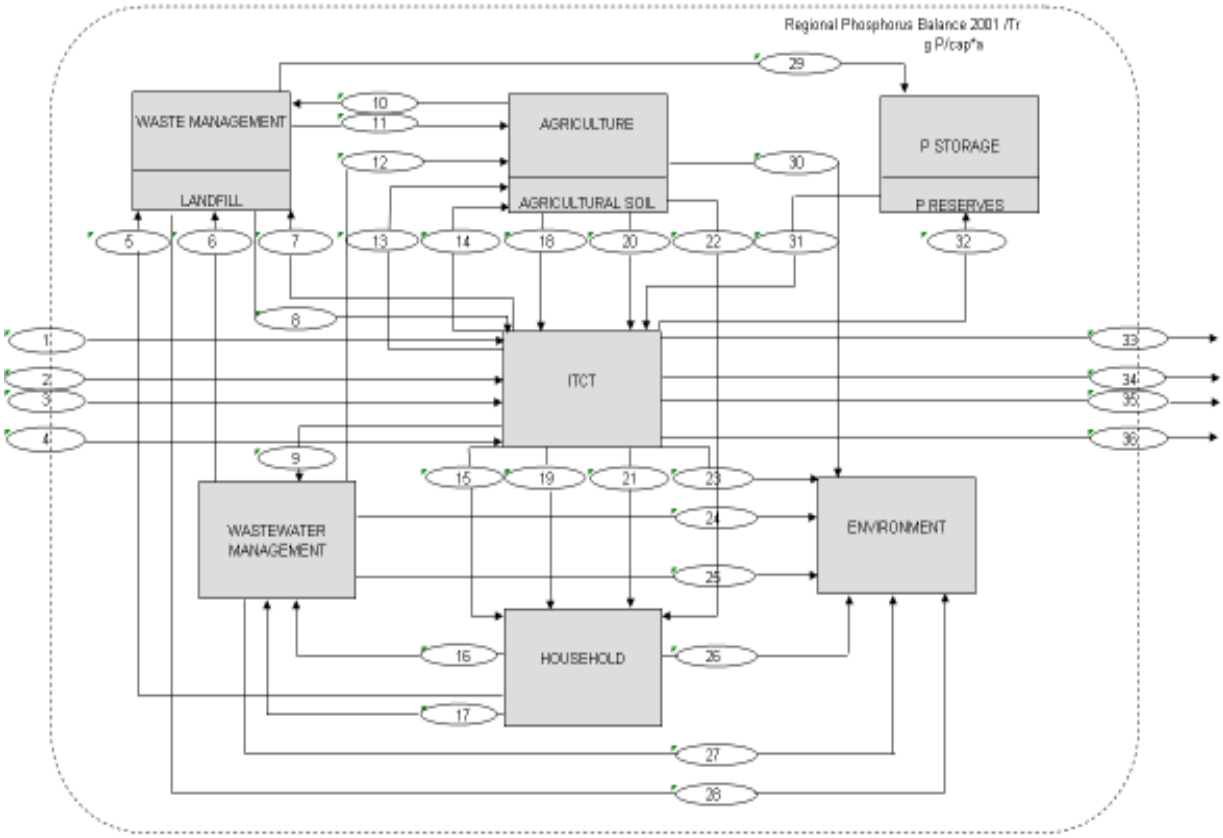

Figure 3.1. The regional MFA system at the 1st level with the flow numbers

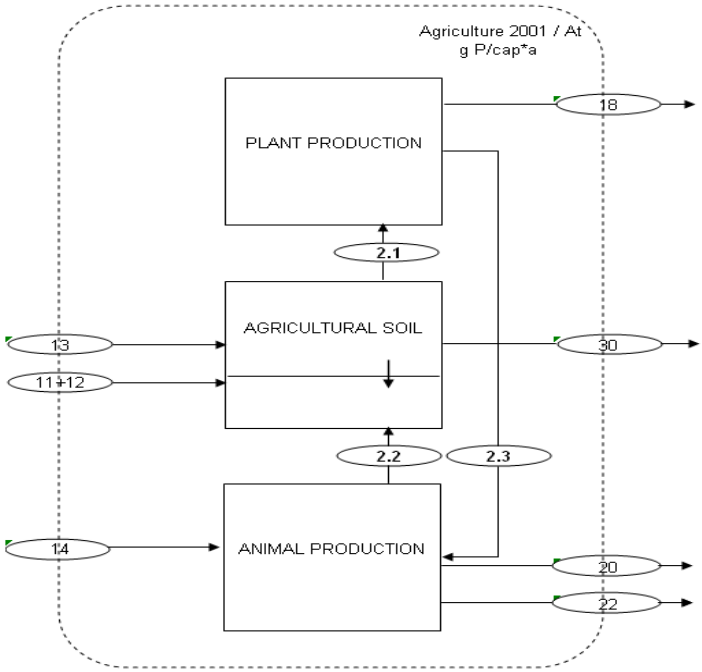

Figure 3.2. Agricultural sector as an example for the 2nd level MFA with flow numbers

For convenience of reference, each flow is assigned a number as depicted above. The numbers are assigned according to the position of the flow in the system picture from left to

right and top down. On the first level, numbers 1-36 are assigned to the flows. On the second level, there are flows which remain within the subsystem and do not appear in the first level system. These flows are prefixed with '*2.x*'- the 2 representing the level of analysis. Management model in the evaluation part is defined at the level 'zero' and is derived from both first and second level systems. This system and its derivation can be seen in Figure 3.3.

Table 3.2. The numeration of flows used in the 'MFA for P'

1st LEVEL		2nd LEVEL	
No.	Name	**No.**	Name
1	Imp P raw&fert	**2.1**	P removed
2	Imp Food	**2.2**	Manure
3	Imp Fodder	**2.3**	Inland Fodder
4	Imp Others	**2.4**	Food
5	MunHhWaste	**2.5**	Urine
6	Sl to Wman	**2.6**	Faeces
7	MunIndWaste	**2.7**	KWw (Kitchen)
8	Recyclables	**2.8**	Excrements
9	MunIndWw	**2.9**	Solid Waste
10	Residues	**2.10**	Solid Waste fr. kitch.
11	Compost	**2.11**	BWw (Bathroom)
12	Sl to Agr	**2.12**	Mun Ww to MB
13	P fert cons	**2.13**	Sludge
14	Fod from ind	**2.14**	Mun Ww to Adv
15	Detergents	**2.15**	Sludge
16	MunHhWw	**2.16**	Cess Remains
17	WwtoCpit	**2.17**	Effluent Adv
18	Plant prod	**2.18**	Effluent MB
19	Food cons	**2.19**	Sludge Inc
20	Animal prod	**2.20**	Sludge Lfill
21	Others cons	**2.21**	Sludge Agr
22	Fuel biomass	**2.22**	Sludge Unkn
23	Losses	**2.23**	Diverted Waste
24	MunWw Lost	**2.24**	Refuse
25	Effluents	**2.25**	Biogeneous waste
26	HhWw lost	**2.26**	Wastes to recovery
27	Sld+cpitt to env	**2.27**	Refuse to MBT
28	Wastes to env	**2.28**	Refuse to TT
29	Storage	**2.29**	Landfilled refuse
30	Erosion	**2.30**	Sorting residues
31	Mining/Reuse	**2.31**	MBT residues
32	Struvit	**2.32**	Recycling residues
33	Exp P fert	**2.33**	Rotting endproducts
34	Exp Food	**2.34**	Therm. treatment res.
35	Exp Fodder	**2.35**	not collected waste
36	Exp Others	**2.36**	other disposal

At the second level, there are five subsystems to be modelled and quantified: Agriculture, ITCT (Industry, Trade, Commerce, and Tourism), Household, Waste Management and Wastewater Management. These become black boxes at the first level, where two additional storage processes are added to the system: P-storage and the environment (see Figures 3.1 and 3.2). P-storage is a hypothetical process representing the useful stock generation in the system, which is important to test the hypothesis of long-term recycling. This issue is treated in the evaluation part, under scenarios.

3.1.2 Model Design 'MFA for P':

A substance flow analysis for phosphorus is carried out in this study, where the national borders and 1 year are chosen as the system boundaries. The choice of the boundaries is founded on a number of reasons: ease of data collection (the availability of national statistics), differing societal metabolisms of nations, regulations being made and implemented mostly at this scale, and the travel time of the substance in the anthroposphere. The choice of the substance level is ideal for the problem at hand, which has to do with the long-term availability and the pollution potential of the resource P. Investigating this problem only at the substance level does not indicate all environmental problems involved with the use of the resource. Yet, it has two advantages:

1. Grade, as the essence of the valuable resource can be considered in the evaluation,
2. It is possible to point at the specific environmental problem, which the studied substance poses.

To the contrary, collective mass flow analyses conceal single substance flows and their effects. This in turn puts the whole emphasis on total mass flows of all goods, favouring the use of light materials at the expense of heavier ones.

Data collection and balancing is done at the second level. At this level, flows which are normally not accounted for (= 'unaccounted-for' flows) in the economy or in statistics can also be revealed using the mass balance principle. These flows are those having the largest uncertainties, on which no direct data can be found, and which are estimated indirectly with the MFA technique. Examples are manure production, fodder consumption, municipal part of industrial waste and wastewater, or the stock changes in the system. The balancing of each

subsystem at the second level involves three steps, where the steps 1 and 2 are developed iteratively:

1. System definition: The MFA concept for the system is designed as a conceptual framework
2. Balancing: The concept is developed iteratively and fed with data. It is balanced and unaccounted-for goods are determined
3. Balanced Systems: The resulting system picture is presented.

Balancing of 'Agriculture' (Section 4.1.2)

In this system, plant production, animal production and agricultural soil are designed as separate processes (see the Goals and Principles of P-Management, Section 2.3). Two different procedures are used for the estimation of each of the two flows, manure and fodder, which are highly uncertain flows and require double-checking. For manure, GVE key values are used in the first procedure, and the backwards calculation from animal products as the second. For fodder, the inland production (called 'inland fodder') on one hand and the feed P requirements for animal groups on the other hand were used to estimate ranges of P-flows. The P removed from the agricultural soils is an important flow in this MFA. It requires also defining and determining the agricultural area of the region. In this study the P-removed with harvest is calculated as follows:

P removed = (Crop production: Table 4.5) + (Inland fodder: Table 4.6)-(Double counting)

The fodder coming from the ITCT process involves by-products from industry and the imported fodder. It is also determined in this section as the difference between total fodder consumption and the inland production of fodder, i.e. inland fodder.

Runoff and erosion are estimated together using area data and per hectare coefficients.

Balancing of 'ITCT' (Section 4.1.3)

ITCT covers all industries using phosphate, including trade. It is designed as a black box due to gaps in data, for example industrial waste-wastewater inventories or inter-sectoral flows are hard or impossible to obtain. Apart from the inland agricultural production entering the process, only import-export and amounts leaving to consumption are used to balance this system, and to calculate the losses. This is sufficient, as P is not generated within this process, and there is no stock (All P is imported). Most of the outgoing flows are balanced in the target process. A detailed data collection on specific industries was also carried out, wherever

necessary: For example, the fertilizer industry data provided detailed information on the most influential flow in the system, broken down into its fractions fertilizer, rock, and other chemicals. Fodder net imports from statistics and fodder by-products from industry were calculated and the estimation in the Section Agriculture on 'fodder from industry' checked against this data. Data obtained from the detergent industry is used in the balancing of the wastewater management system. Food industry data distinguishes between imported-exported and inland produced food, both as animal products and plant products. Chemicals (Others) data give an estimation of food and feed additives imported to both countries, as well as builders for detergents.

Balancing of 'Household' (Section 4.1.4)

Food import is balanced first of all. Flows of goods, on which dietary information can be found are organised into a systematic: Food balance sheets of FAO are used to estimate the available food-P for consumption, i.e. the amount leaving food industry. The flow after distribution is called 'Food-P purchased'. What remains after kitchen processing is named 'Food P-intake'. Transfer coefficients from (Baccini and Brunner, 1991) are used for the kitchen process within the household. The portion of P sourcing from human excreta can be checked against the per capita P excretion data in literature (Geigy, 1977). Washing, laundering, etc (in process bathroom) and heating (in process others) are also involved in this subsystem. Detergent consumption was estimated in ITCT section. After the wastewater generation is carefully estimated (in terms of its P content), this must be compared to the collected wastewater on the output side of the households. Losses from household are defined to represent the slack which can occur if waste/wastewater generated here is higher than the collected waste and wastewater from households.

Balancing of the 'Wastewater Management' (Section 4.1.5)

Total wastewater production, the amount collected into sewer and the amount going to cesspits are estimated. Sewage water is separated into household and ITCT wastewater. Next, the phosphorus contents of these flows are estimated. Wastewater treatment is designed as two processes, which involve either conventional treatment or additionally advanced treatment for P. The system is balanced using technical transfer coefficients.

Balancing of the 'Waste Management' (Section 4.1.6)

A general waste management system is constructed which is suitable for balancing the modern waste management. The system includes municipal wastes only. Household waste and municipal ITCT waste generated are collected at their source either in separate bins or altogether in one bin, which is represented by the 'waste service' process in the system. This is done because collection is required to be modelled as part of the waste management system. Collection then follows as separate collection and refuse collection. Municipal sludge from wastewater treatment also enters this process. The balancing of the system follows from back to front in the system picture. First, flows entering composting, recycling, refuse collection, and not collected waste are converted to P-flows, as data on waste is mostly given as treated amounts or by destinations. Their sum must equal the municipal P coming from households and ITCT. Then, the difference of this sum and the P from households (calculated while balancing the household) is used to end up with the municipal waste-P coming from ITCT. Wastes enter four types of treatment processes, producing outputs which can be estimated using transfer coefficients.

Determination of the regional stocks and their grades (Section 4.1.8)

In order to assess the long-term use of the P in a region, existing stocks should be determined. In estimating P-stocks in the region mass is taken as the criterion. The largest stocks are chosen and their size and concentrations are estimated. These are shown on a logarithmic scale. The following anthropogenic goods and both anthropogenic and geogenic stocks are chosen for this comparative evaluation: Biomass, manure, sewage sludge, agricultural soil, ordinary soil, ashes from power plants and from incinerators, geological resources. The reason for estimating some flows, like manure and sludge, together with stocks is their relevance with regard to their high P-concentration. As mentioned before 'useful stock generation' as a future management alternative is also evaluated in this work, in the scenario part.

3.1.3 The Sources and the Handling of Data

Statistical databases and literature surveys were used as the main data sources, and no measurement is done in this study. Data used was not published in a form which could be used directly. Data sources had to be discovered, accessed, data merged and eliminated; double-checked and converted into usable form to end up with the small database generated in

this work for P. The system was designed in a way which makes it feasible under the constraint of actual data availability. This was done in the example of two distinctly differing cases, Austria and Turkey. Developing the systems in accord with the logic of (and not the systematic, as this does not exist) the statistical records of countries means that the model would be suitable also for other countries.

Data sources that were used include FAO, WHO/UNICEF, IFA, UNEF, IFDC, USGS, ministries, universities, national statistics institutions, state's planning organisation, various industries, import-export statistics, chambers of commerce, chamber of mining engineers, association of businessmen and industrialists, association of detergent and soap producers, and many scientific papers and books. All references are listed at the end of this work.

The data on the flows of goods is collected mostly from national statistics. These values are then multiplied by the P-concentration values that have either a certain variability or an uncertainty. There were also cases, where the possible maximum-minimum amounts of a good were estimated first and then multiplied by an average P-content. The process of estimating each data point is explained detailed in the Results chapter under the corresponding section.

Uncertainty in MFA arises from dealing with uncertain or conflicting data, variability of certain flows and concentrations, and unaccounted-for flows which can only be roughly estimated. For the determination of the latter, an indirect way, balancing, can be used to derive data from the collected data. Incorporating uncertainties into the MFA in this study necessitated balancing processes by using flows having uncertain values. MFA studies until now included flows quantified either using single values, like the average, or by calculating with the extreme values and assigning the largest calculated range to the resulting flow. In this study, another approach is developed: While adding, subtracting flows for this purpose, or multiplying them with transfer coefficients, the notion of 'standard deviation' is used. The source data ranges (like '34-46') of flows used for the balancing are converted first to the form 'average +/- standard deviation' (like (40 +/- 3)), assuming that the values within this range are normally distributed and that the range (34-46) represents the 95% confidence interval. The result of the balancing is then shown in scientific notation (average +/- standard deviation), where the 'standard deviation' represents the level of uncertainty. As such, the

error propagation in the balancing follows the one of standard deviations (and not the one of average deviations).

The data is depicted on system pictures in a way which provides a visual judgement on the data quality as well: Most flows are determined based on collected data and assigned a range with a hyphen '-' (read 'to') between the lower and the upper value (e.g. '34-46'). There are also values which are determined indirectly as explained above. These are presented using a different notation as a distinguishing mark: Every flow presented as 'average +/- standard deviation' in the system picture is derived through balancing, namely determined indirectly. The same sensitivity level is used for the demonstration of data. Rounding is done in a way that the flows for Turkey have no decimal places, whereas those for Austria have one decimal place.

3.2 Evaluation

The evaluation involves comparisons of different states of one system (or two different systems against each other) by using indicators for an objective comparative analysis. This serves the purpose of providing policymakers with answers to the questions of the form "what would happen if…" The scenarios analysed in chapter 4.2 illustrate this way of reasoning. The proposed indicators measure the **depletion potential** and the **pollution potential** created by a region while consuming P. They show the pollution and the depletion (as opposed to conservation) effects of the regional resource management with a **long-term view** and in a **global context**. These highlight the effects of management practices reaching beyond the planned (intended) scope of time and space: The long-term view is precautionary and enters the evaluation by considering most important stocks being formed, built up, or depleted in the system. MFA technique is instrumental in determining these stock changes. On the other hand, the 'pollution potentials' of today and in the future are also determined both for the status quo and under different scenarios of future resource availability. The global context is about the transnational character of environmental problems and of resource scarcity. This requires the 'hinterland use' (total P raw material used abroad for the production of the imported goods) to be part of the evaluation. Incorporating the hinterland to the evaluation provides the reader with the actual raw material use of the region as its share in the global consumption. The feature also helps estimating 'hinterland pollution potential' associated with this hinterland consumption.

The flow-stock-process design of the MFA and the 'temporal limit' dimension of the analysis allows for the evaluation over time. For this evaluation, a management model (The Proxy System) is designed also using the MFA technique and based on the previous MFA systems in Section 4.1. The management system called 'Proxy System' is designed to measure and monitor the management performance with respect to depletion and pollution potentials created. The Proxy System is condensed to those flows and stocks which are either affected by management decisions or which are interesting as results of them. Here, it surrounds the region by a second spatial border which incorporates upstream hinterland processes and involves all relevant stocks for the long-term evaluation. These enable running scenarios on the management model to discuss the wider effects of different future resource use schemes.

This evaluation uses the scarcity notion of resource economics, the intergenerational equity version of sustainability, the 'hinterland' concept and the environmental constraints in defining strategies. However, the pollution potential and the depletion potential introduced in this work need to be explained: Pollution potential covers all P losses and effluents to the environment, and does not refer only to the amount directly entering water bodies (see Section 1.1 for the scope). On the other hand, depletion potential approach (defined below) marks the unique approach of this study to the non-renewable resource depletion problem. According to this, the depletion potential created by a region does not only refer to the primary resource extracted from a high grade mine in some part of the world to be imported to or to be used in that region, but it also involves the management of those primary as well as the secondary resources within the region. The definition extends the scope of conservation from being limited by the choice of 'mining or not mining' prior to consumption, to an integrated action towards a careful use prior to, during and after the consumption.

3.2.1 Definitions

Depletion:

Depletion is about the consumption of a natural resource faster than it is replenished. It is the actual physical reduction of natural resources and in case of non-renewable resources it equals the amount consumed: "For renewable resources, the part of the harvest, logging, catch and so forth above the sustainable level of the resource stock; for non-renewable resources, the quantity of resources extracted" (UN, 1997).

In this study, a physical value depreciation is assigned to the non-renewable resource arising both from the high grade resource extraction (thereby shrinking the stock) and through its use in the anthroposphere. This depreciation of the resource is seen as the physical basis of 'depletion'. Depletion is presumed to increase the cost of using the resource[1] over the long term. The increase may occur in the form of higher extraction costs, higher environmental costs of extracting and / or simply the opportunity costs of using the non-renewable resource. The depreciation and the accompanied cost increase describe the resource depletion for the purposes of this study. For the specific resource treated here, depletion refers to a drain on high grade ore, and the dispersion of the substance by the management of a region.

Dispersion:

Dispersion is the process of spreading the substance in the environment. The two most common examples are dilution of a flow in surface waters (being mixed with a larger volume which has a lower concentration), and scattering of the constituents of a flow over a pedospheric volume. In both cases resource concentration is going towards geogenic background levels. In this study, "dispersion" is represented by the total P in wastes and losses not entering the useful stock. It points at a dilution potential, which the overall system exhibits inherently and that can be increased, but also reduced by the management of the region.

Depletion Potential:

This shows the contribution of a region to the 'phosphorus depletion' problem brought about by the use and the management of primary and secondary resources over the entire life cycle. The management performance of the region related to such flows is defined in this study by using four indicators (see indicators for conservation below)

Sustainability:

"Sustain - to cause to continue (as in existence or a certain state, or in force or intensity); to keep up, especially without interruption diminution, flagging, etc.; to prolong"[2]. "Sustainable development is development that meets the needs of the present without compromising the ability of future generations to meet their own needs."[3]

---

[1] In Section 1.2.2 it is stated that depletion of P occurs with the dispersion of P in the environment.
[2] Webster's New International Dictionary. (Springfield, Mass.: Merriam-Webster Inc., 1986)
[3] Page 8, World Commission on Environment and Development. Our Common Future. (Oxford, Great Britain: Oxford University Press, 1987)

In this evaluation, sustainable management of P focuses on the non-renewable character of the resource: Depletion of a non-renewable resource stock today should not jeopardize living standards tomorrow.

Stock and Useful Stock:

The term 'stock' is used the way it is defined in MFA terminology (Brunner and Rechberger, 2004). 'Useful stock' implies those natural and anthropogenic stocks for which a market or a technology for feasible extraction might not exist so far, but judging by the grade, a potential for its use in the future exists.

In this study, 'useful stocks' are defined as those stocks having higher (10 times or more) concentrations than the geogenic background concentration. With this definition the stock in the soil is excluded from the 'useful stocks' for the purposes of this work (means: Soil itself is not the right compartment to store P).

Hinterland Use

'Hinterland use' of a resource refers in this study to the total amount of raw material (at a substance level) used abroad for the production of the goods imported to a country. It represents a country's real contribution to the global natural resource use in terms of concentrates and can be used to estimate the hinterland losses. Therefore, a wider scope in the system definition is necessary which incorporates the upstream hinterland processes. Downstream hinterland is not considered. A detailed account on the application of the concept to phosphorus resources is provided in Section 4.2.2.

Hidden Flow:

"The movement of the unused materials associated with the extraction of raw materials, domestically and abroad." (Eurostat 2001)

In this study the term hidden flow is used in the same sense and replaceable with the term hinterland loss, i.e. the substance flow generated abroad during the production of the goods to be imported, which does not end up in the goods but is lost or wasted. There are no inland hidden flows in this study, only some unaccounted-for flows. These are those flows for which

no data can be found anywhere, and which in this study are estimated through the means of substance flow analysis.

Proxy System

A methodologically organized system for the management of resource flows and stocks, for the definition and calculation of indicators and for monitoring. It is derived from the descriptive MFA model. The MFA is designed sectorally due to the nature of available data and in a way to reveal the unaccounted-for flows through balancing. The proxy system includes only those flows and stocks composed of MFA flows and stocks that are relevant to the problem definition and to the evaluation of the management performance, including the hinterland.

Indicators

These are values defined for representing the management performance, with the aim of compressing information about the complex systems into a few single numbers to make those systems easily comparable. These numbers are derived from a system to describe its properties, for example different aspects of its efficiency. They can be used to compare two systems in an easy way, for example two countries or one country before and after a certain management action.

3.2.2 Comparative Assessment

In order to support inter-regional comparison per capita flows are calculated first. The comparison of per capita flows and stocks in the case study regions highlights the problems involved in the use of the resource, and serves as a starting point for the rest of the Evaluation. Insights gained from this part help developing a relevant proxy system and indicators for the problem at hand.

3.2.3 Management Model

The proxy system is an abstraction with a defined purpose. Here it serves to calculate suitable parameters/indicators that are useful for controlling the pollution and the depletion. Very different proxies could be generated depending on the problem definition, based on the same underlying MFA. First, collected data is processed to form a sound MFA. Proxy systems and indicators have the ability of compressing the high quality data laid out in the MFA and

refining it into readily available information for decision making. Knowledge on how to apply what information, and keeping the focus on the goals of the management are necessary preconditions for making the right choices while designing a Proxy System. It must be stressed that Proxy Systems and Indicators are baseless without diligent data collection and the correct transformation of data into an MFA.

In the proxy system chosen here, the regional system is derived from the original MFA in Chapter 4.1. The system is simplified; processes and flows originally chosen in the MFA are rearranged and reduced in number to enable manipulating the key flows and studying the resulting management scheme. Flows which were obscured in the sectoral inspection and which should be controlled to reach the goals of P-management are extracted and highlighted. As shown in Figure 3.3 the system brings together information from the different levels of the earlier MFA.

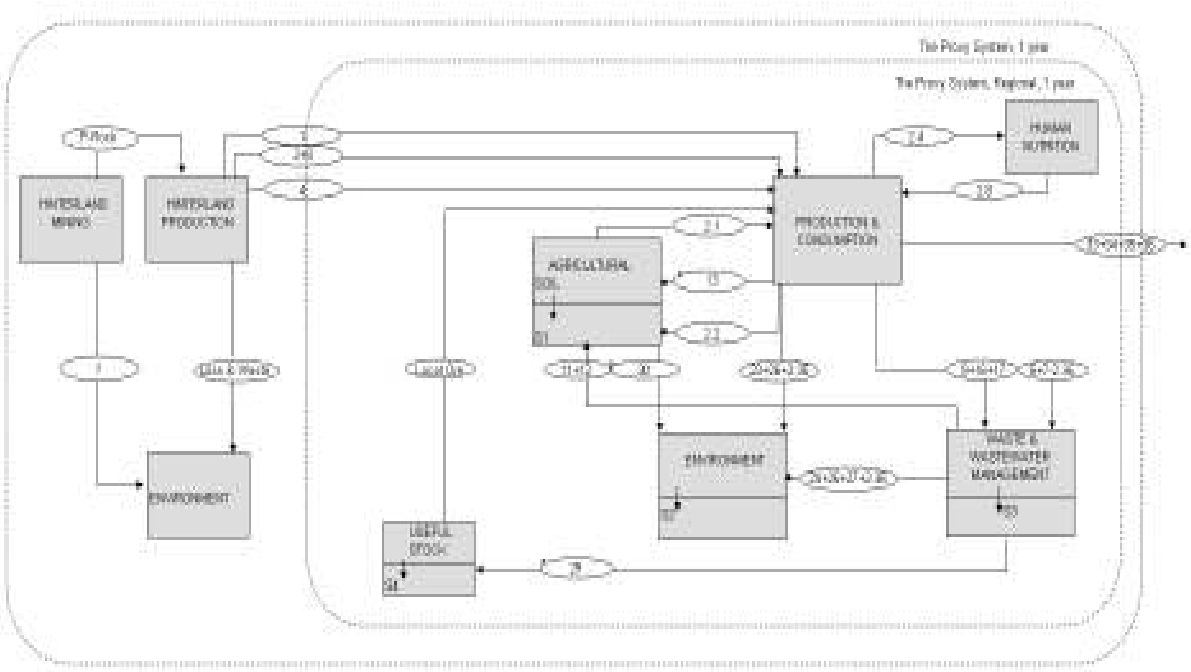

Figure 3.3. Design of the Proxy System with the flow numbers representing goods

This evaluation aims at quantifying and comparing pollution and depletion effects of the P-management of regions with a long-term view and in a global context. That means, most important stocks, the front end (resource imports and primary production) and the back end (waste/ wastewater production) need to be highlighted; and hinterland consumption needs to

be incorporated. The choice of the processes and the goods in the Proxy System is explained in the Evaluation chapter.

The hinterland use of the substance, (called ‘P-rock’ in the figure), is calculated by adding up two flows: 1. the raw material import, 2. the raw material used in the production of the imported goods. The first entity is determined in the MFA part of the work in terms of a substance flow (Chapter 4.1). The second is estimated in the Evaluation chapter (Section 4.2.2). This estimation uses transfer coefficients derived from the regional MFA. The substance flow in imported goods is converted to the one used in their production by these transfer coefficients.

The proxy system provides an overview and the basis to run the management scenarios. The figure above shows how the flows are calculated based on the data extracted from MFA. The flows with numbers were determined in the MFA analysis (Chapter 4.1). Some are combinations of MFA flows represented in Figure 3.3 by the sum of flow numbers. Flows shown by names are estimated in the Evaluation part (Chapter 4.2).

3.2.4 Measuring Performance

A comparative quantitative evaluation of the status quo and the scenarios is carried out using the defined indicators (See section 4.2.4) by determining
-the regional losses of the resource (I_1),
-the change in agricultural soil stock (I_2),
-losses caused in the hinterland due to the hinterland processing of the imported resource (I_3),
-overall primary resource consumption (I_4)
-the dissipation of the resource (I_5)
-useful stock generation (I_6) and
-the period of self-sufficiency provided by the existing useful stocks in the region, (I_7).

This study defines and estimates the ‘period of self-sufficiency’ of a region, for the resource in question, as one of the indicators. It is the ratio of the inland stock and the demand. In this study and particularly for P, this is based on the harvested P from soil, as the most important flow representing the demand: With increasing price, the P input per harvested P could be reduced, and increasing P-scarcity could cause reduced harvests in the future. When defined

like this, the fertilizer use principle of ‘replacing the removed nutrients in the soil’ becomes implicit to the demand. Dividing the existing inland stocks by the need, as harvest, gives the period for which the society can sustain itself.
The regional losses of the substance represent the inland pollution potential. From the amount summarised in this number, only the flow ‘effluent’ is directly entering water bodies. Yet erosion and losses would also end up there with or without retardation.

All but one (I_7: years) of the indicators are dimensionless numbers. Most are calculated based on the final demand or the direct consumption, in this case per dietary P intake, as diet represents the essential and non-substitutable use of P for human beings. They indicate how many grams of a good is produced / consumed / generated per gram of dietary P intake. Two indicators (I_6 and I_7) are expressed based on the agricultural turnover in one year. This turnover is the P harvested from soil; the ‘removed P’ in the proxy system (see Section 2.3. Goals and Principles of P-management). I_7 has the dimension of time ([T]), and represents a period, during which the region can be self-sufficient concerning P.

The calculation of each indicator is shown below with the flow numbers as in Figure 3.3, and these in italics. A detailed account of them can be found in Section 4.2.4.

<u>Indicators for Environmental Protection</u>

I_1. Inland losses (Potential of P-pollution in the country)
Represents the direct losses to the local environment per dietary P consumed.
(*30 + 23+26 + 2.35 + 24 + 25 + 27 + 2.36*) / *2.4*

I_2. Agricultural Soil Accumulation (Future P-pollution potential created today)
(S_1^+) / *2.4*

I_3. Hinterland Losses (P-pollution potential created in the hinterland)
Shifting the production abroad and importing readily produced goods increases this value.
(Loss & Waste) / *2.4*

<u>Indicators for Conservation</u>

I_4. Primary Resource use (Share in the global resource consumption)

P-rock consumption in the hinterland for the production of imported goods.
(P-Rock) / *2.4*

I_5. Phosphorus Dispersion (P scattered and diluted in the environment)
All P in wastes and losses of the region not entering the useful stock.
$[(S_1^+ + 30 + 23+26 + 9+16+17 + 5+7) - 29] / 2.4$

I_6. Storing P (Useful stock generation)
$(S_4^+) / (2.1)$

I_7. Self-sufficiency (Lifetime of the inland useful stock)
$(S_4) / (2.1)$

3.2.5 Long-term Management

Before discussing any management plan for the future, the diagnosis of the status quo must be made. This serves as the 'blank' measurement of the initial performance of both regions, a snapshot made by using the indicators. The proxy system is quantified for both regions and the indicators are calculated and discussed in this part.

Long-term management aims far sighted planning for resource use and environmental protection, and depends in case of non-renewable resources primarily on the future availability of the resource. This can be in the form of global natural reserves or in the form of anthropogenic stocks. The size of both is dependant on technology. In this study, secondary resources are considered in a long-term perspective as well. Therefore, in the proxy system designed, there are two sources for the primary and the secondary resources: Imports and the regional useful stock. This approach incorporates every P-stock having favourable P-concentration ranges into the long-term evaluation. So are the stocks and useful stocks differentiated and the useful stock defined, calculated, and used in scenarios.

As the future is inherently uncertain, scenarios are developed. These serve two purposes:

1. They illustrate how the management systems and indicators developed in this study can be used to measure and manage societal metabolisms.

2. They look into the hypothesis as to whether resource management and waste management practices could help a possible scarcity of phosphorus, by developing and testing different management schemes in this respect.

In doing so, the most important aspects, like dietary needs and different dietary levels, the soil stock, the useful stock, and most importantly, the future possibilities in primary resource availability are used. The latter is studied under three headlines;

-constant P-import to the region till infinity (endless explorations and technological improvement)
-gradually reduced P-import and fertilizer use over time (increasing scarcity) and
-insufficient P-import, causing soil mining (lack of global and local useful stocks)

It is assumed that the regional management, guided by the goals and the principles (Chapter 2) and the indicated management need (Section 4.2.5), would respond to these resource availabilities,

-by only protecting the environment,
-by reducing excessive use and conserving the resource and the agricultural soil quality in the longest period possible (the end of the period marked with reaching the subsistence level)
-by trying to sustain the population for the longest period possible

All scenarios share a set of common assumptions, such as the population in the region or the share of P expenditure in national economy remaining more or less the same over time, or no important change taking place in the production technology and in the diet unless stated otherwise. In each scenario the potential for secondary resource use is discussed as a separate part and the period of self sufficiency of the region is estimated. A comparative assessment between the status quo and the scenarios is done again using the indicators.

3.3 The Case Studies

In the case studies, the P-metabolisms of two countries, Turkey and Austria are investigated. The size of Turkey is 10-fold of Austria. Both countries are 100% importers of the resource phosphorus, but Turkey has some phosphate deposits. Cultural, socio-economic,

geographical, climatic, historical differences make the comparative analysis challenging, but provide a good basis for testing the model developed. This is because the discrepancies between the two countries have distinctly differing effects on the P-metabolism: Diet based on animal products in Austria, low meat consumption and no pork consumption in Turkey, widely differing agricultural systems, completely different waste management and technologies are only some examples. These and the scale difference render it more interesting to answer the following questions in the example of these two countries:

- What is the Status Quo of the P-use? How do the countries differ in their P-metabolisms?
- What are the P-stocks of both countries?
- What are some wider effects of the regional management beyond the regional borders and the planning periods?
- Which flows cause the P-pollution, how can the future pollution be prevented?
- What is scarcity? What could the possible consequences be in a region facing P-scarcity?
- Which resource and waste management alternatives are there to mitigate the effects of scarcity and pollution?

4 RESULTS

4.1 Material Flow Analysis for Phosphorus

In this part, MFA for P in Turkey and in Austria is presented. The employment statistics (Turkey: 46 % agriculture, 20 % industry, 34 % services and Austria: 0.8 % agriculture, 30 % industry, 68 % services) already pointed at different anthropogenic flows of phosphorus, yet, some population-proportional flows were found as well, where the natural limits prevailed, so that the flows erosion, net P-import, dietary intake, P-fertilizer consumption proved to be population proportional flows. Occasionally, same specific values or constants were used for both countries, and mostly they were adjusted for the corresponding country.

The flows were quantified by ranges of phosphorus flows derived from statistical databases. All data ranges based on collected data are shown with a '-' between numbers (like in '34-46'). The rest of the data, which was derived indirectly (through the balancing of flows), are results of arithmetic operations, and they also have a different notation as a distinguishing mark. That means, in order to give an idea about the source and the quality of data, numbers derived through balancing are treated separately in the demonstration of data. While balancing with the flows that have an uncertainty, the notion of 'standard deviation' is used. The result of the balancing is shown in this scientific notation (average +/- standard deviation), the assumed "standard deviation" representing the level of uncertainty. This means, every flow represented as 'average +/- standard deviation' is derived through balancing, namely determined indirectly. The same sensitivity level is used for the demonstration of data. Rounding is done in a way that the flows for Turkey have no decimal places, whereas those for Austria have one decimal place.

4.1.1 System Definition

The system definition for the modelling of phosphorus resource use is shown below.

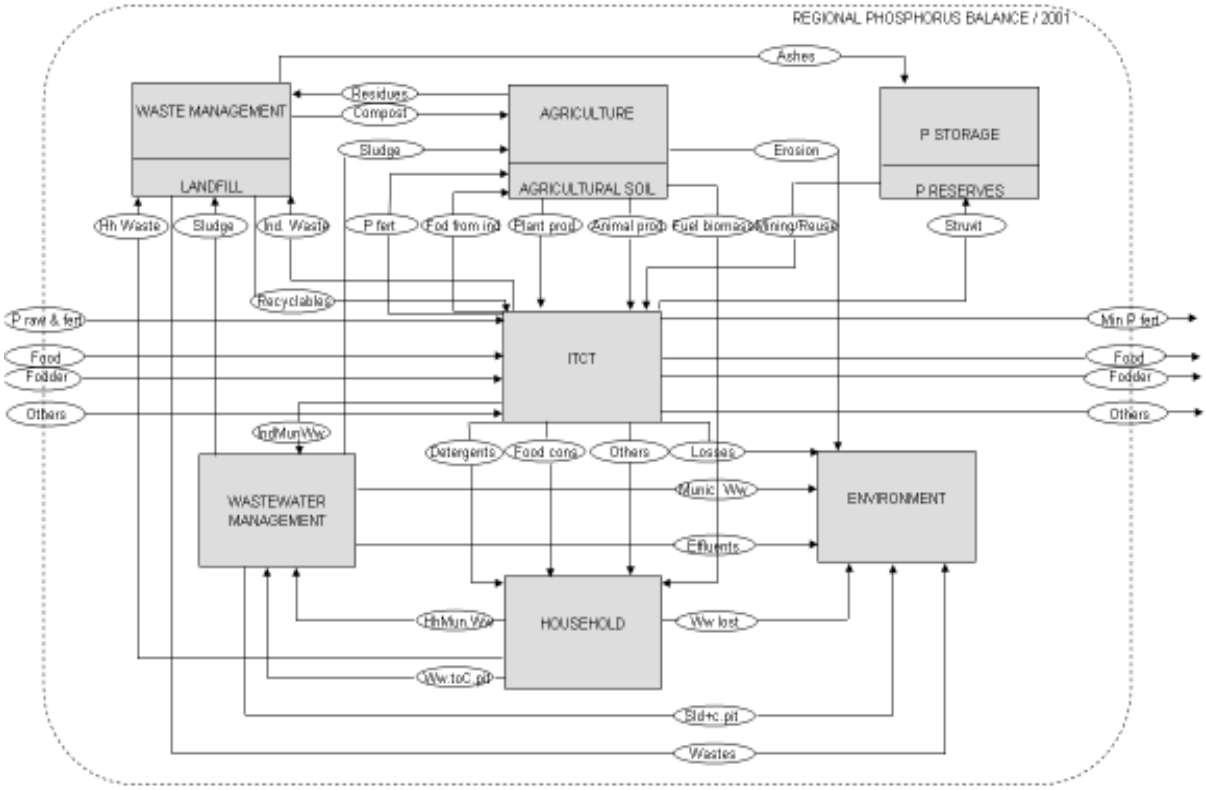

Figure 4.1. The regional MFA

In this work, MFA is carried out in a hierarchic order. The simple model above is elaborated on at a second level to quantify the flows. The processes agriculture, household, industry, waste management and wastewater management are themselves (sub)systems and make up separate sections of this chapter. A short description of the processes is given in the following. More detailed process and good descriptions for the second level systems (subsystems) can be found in the Appendix A.

<u>Agriculture</u>

All agricultural activities carried out on the agricultural soil take place in this transportation, transformation and storage process. Output flows are the live animals and the plant products, as well as primary animal products, like eggs and milk.

The flows associated with this process are (from left side, counter-clockwise in Figure 4.1):

Input: Compost, Sludge, Phosphorus fertilizer (mineral P), Fodder from industry

Output: Residues, Plant products, Animal products, Fuel biomass, Erosion

ITCT

Industry, Trade, Commerce, Tourism are gathered in this process. It includes manufacturing and distributing of the goods, foreign trade, tourism. Process distributes total P import to the country and the P incoming from agriculture to the exports, inland consumption and to the losses & wastes. The unknown flows of trade, commerce and tourism are not shown. The data on consumption and export make up the whole output from the process. The balance goes to wastes and losses.

Input: P raw material and fertiliser, Food, Fodder, Others (import), Mining / Reuse, Animal production, Plant production, Recyclables

Output: P fertilisers, Industrial municipal wastewater, Detergents, Food consumed, Others, Losses, Others (export), Fodder, Food, Mineral fertiliser, Struvit, Industrial waste

Household

Household, beside all activities in private households like nourishing and cleaning, this process also includes out of home eating. It is a transformation process converting only food P into waste and wastewater. Detergent P and P in fuel biomass pass directly to the wastewater and household waste.

Input: Detergents, Fuel biomass, Others, Food consumed

Output: Household municipal wastewater, Wastewater to Cesspit, Wastewater lost

Wastewater Management

Wastewater management here refers to the municipal wastewater treatment and the locally managed wastewaters entering the process called ‘cesspit’ here (see Section Wastewater management). System wastewater management is constructed based only on statistical data, i.e. the amount of wastewater given in statistics is taken as input flow (as the controlled amount of wastewater in sewers or cesspits). The generated rest in the model described here is a loss sourcing from households.

Input: Wastewater to cesspit, Household municipal wastewater, Industrial municipal wastewater

Output: Sludge unknown and cesspit rests, Effluents, Municipal wastewater lost, Sludge to agriculture, Sludge to waste management

Waste Management

Subsystem (process) waste management covers not only the municipal wastes but also the rural household waste entering it together with the municipal sewage sludges. Waste stuff which are not managed, like remainings of the fuel biomass are also discarded as waste but not collected. These leave the system directly and enter the process environment.

Input: Household waste, Sludge to waste management, Industrial waste, Residues
Output: Wastes, Recyclables, Compost, Ashes

Environment

Environment covers all the environmental compartments. It is a storage process. All the treatment effluents, losses, and flows with unknown paths (which finally end up in the environment) are linked into this process.

Input: ITCT losses, Municipal wastewater lost, Effluents, Wastewater lost, Sludge unknown and cesspit rests, Wastes, Erosion,
Output: -

4.1.2 Agriculture

Agriculture is the most important process in the overall system, because 80% of the P consumed globally enters this sector. Phosphorus balances in agriculture are important, as the flows and stocks especially in this sector have direct implications on sustainability, environmental quality, efficiency and scarcity of using P. In the whole system of regional flows the process agriculture has a central and leading role. Therefore, the first sector for balancing the P-flows will be the agriculture.

4.1.2.1 System Definition for the Subsystem Agriculture

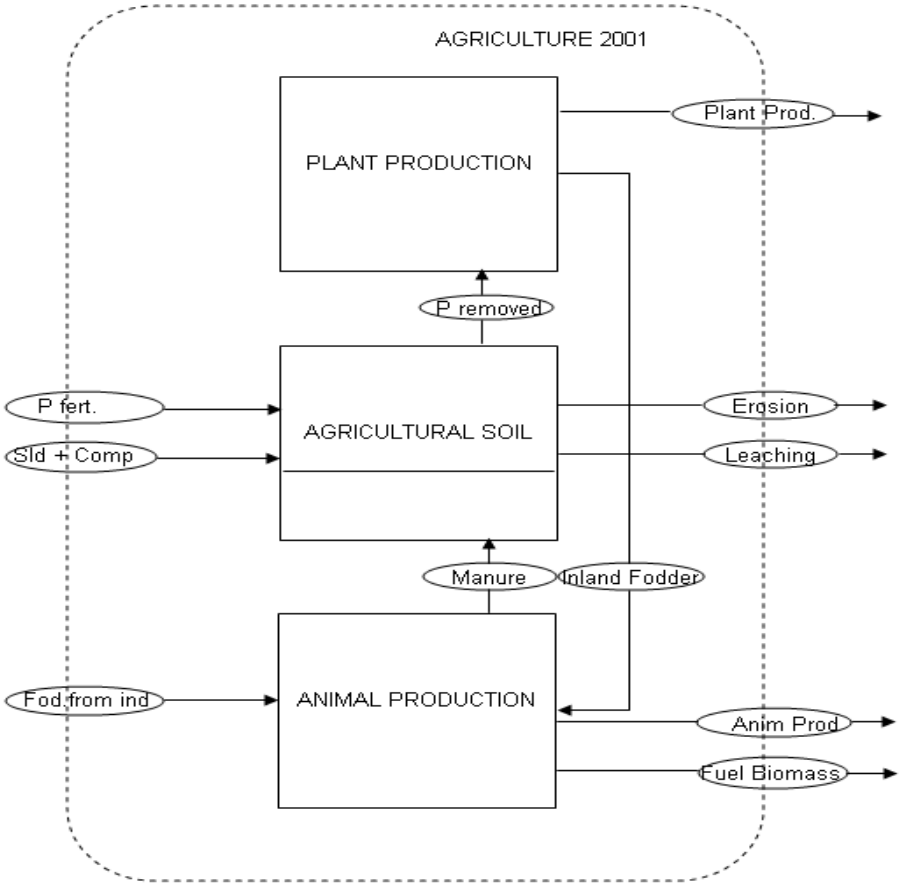

Figure 4.2. The Material Flow Analysis for the subsystem ‘agriculture’ (Details in the annex)

4.1.2.2 Balancing

A- Status of Agriculture in Austria and Turkey

Agriculture is a highly important sector for both countries. The share of agriculture in Turkish GDP is 14.3%. However, GDP per capita in agriculture is relatively low. Turkey's agricultural policy differs substantially from the Common Agricultural Policy of EU, major efforts need to be undertaken to align with the Community acquis (Office of the Prime Minister, 2001). In Austria, the share of agriculture in GDP has been 1.5 % in 1998. Domestic agriculture has a small-scale structure, which helps heading for an ecological agricultural policy. The share of animal agriculture in final production is about 66%, whereas plant production holds a share of 34 % (Molterer, 1997). Animal production in Turkey, on the other hand, has only a share of 20 % in the agricultural economy.

Phosphate Fertiliser Use

The consumption path of phosphate fertilisers with time in both countries differ widely from one another (Figure 4.3; the good 'P-fert' in Figure 4.2). In Turkey, the demand for phosphate fertilisers has been increasing up to around 600 kt P_2O_5, falling to 470 kt in 2000 and 2001, which might increase again, because of the South-eastern Anatolia Project (GAP). GAP is a massive $32 billion public project to harness the power and potential of the upper reaches of the Tigris and Euphrates rivers and to irrigate the fertile plains that lie between them. GAP will double Turkey's irrigable farmland in a region, which has traditionally suffered from light rainfall. In Austria, on the other hand, partly due to the increased fertility level, after years of mineral fertiliser application, and partly due to environmental concerns, the P fertiliser consumption has a decreasing trend since 1970`s.

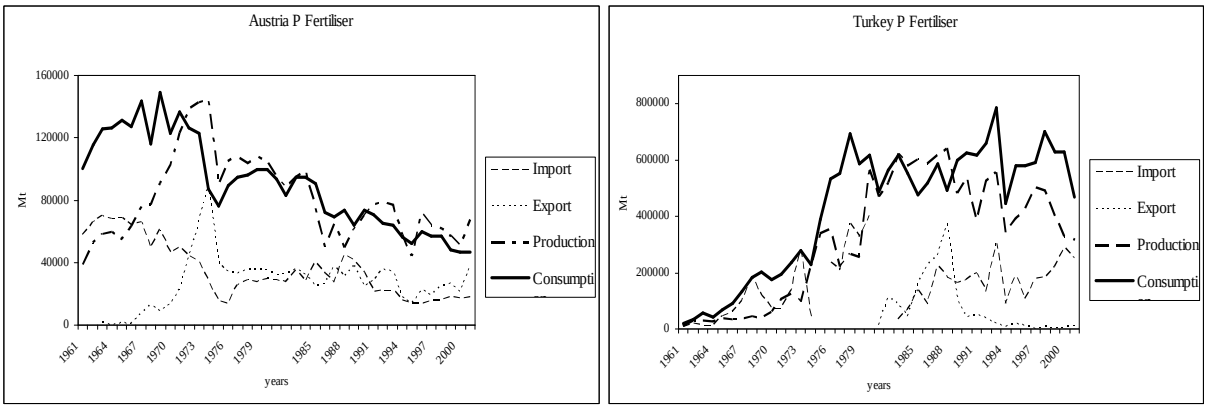

Figure 4.3. Fertiliser Import-Export, Production-Consumption Trends for Turkey and Austria, metric tonnes of P_2O_5, Data: (FAO, 2001; FAO, 2004)

B- Phosphorus Flows in Animal Agriculture

Previous studies (Figure 4.4) on the regional or farm level balancing of phosphorus showed huge inefficiencies in animal production due to two reasons: First, the animal metabolism does not allow P to remain in the animal body, most of it is excreted. This is more so with non-ruminant animals. Secondly, animal agriculture is being run in the form of intensive husbandries, using purchased feed and feed grade additional phosphate. The accumulation of the manure in geographically isolated sites and the inability of transportation is a serious problem.

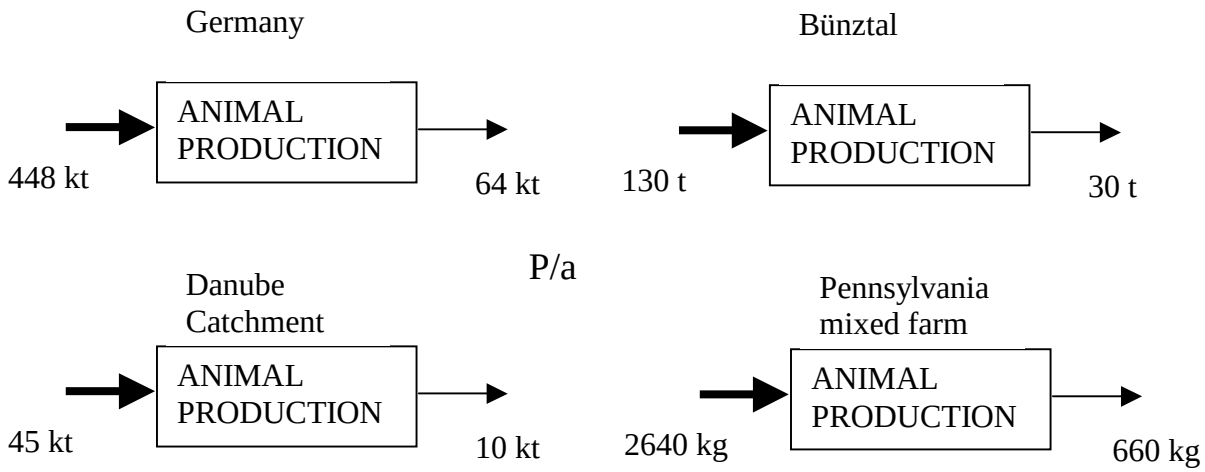

Figure 4.4. Input and output of animal production from phosphate balancing studies in different countries (Bünztal (Brunner et al., 1990), Danube Catchment (Zessner et al., 1997) of Austria, Germany (Frede and Bach, 2003), Pennsylvania (Saporito and Lanyon, 2004))

Western countries now try to reduce these excesses due to environmental concerns. Austria reduced the amount of mineral fertilizer P in the past 25 years considerably. Germany reduced the number of cattle by 20% between 1999 and 2002. Netherlands, having the largest P-trouble in the form of manure takes measures, Nordic countries made regulations limiting the animal numbers per area. The figure above shows that the animal agriculture also in this study will probably be the most influential process with the highest internal flows in the overall system. Thus, balancing the animal agriculture in Turkey and in Austria will be the first task. The two influential, yet problematic to determine flows in animal agriculture are the P-flows through manure and fodder. Important, as they determine the extent of P-accumulation and problematic as their production and consumption are not measured directly. It is a challenge of this study to make good estimations of these flows for two regions on a national scale,

where there are only some relevant statistics with differing systematic in both cases. The approach chosen is explained below thoroughly.

Estimation of manure P

Two different methods have been used to calculate the amount of phosphorus in the manure. They are chosen, as they are suited for a country-level assessment based on national statistics. The first one (Zessner et al., 1997) uses the animal stock. By multiplying the number of animals, GVE values (livestock unit for 500 kg) and P concentrations per GVE unit in manure, a range for annual P flow within the good manure is calculated (Tables 4.1.a, 4.1.b). The standard GVE values are defined for different age groups of animals. These values are averaged here for the animal types, weighing GVE values with the age structure of the group. Same values are used for Turkey.

The tables show sources of the P associated with manure, the amounts of P in this form and the different distributions of manure types in Austria and Turkey. Yet, the results of this method for Turkey can not be used, as the estimate for manure-P (208-280 kt) largely exceeds the real quantity. The reason is that the characteristic values for Austrian animals have been used for both countries, which have much smaller size and less fodder allocated in Turkey. The estimate for Austria is realistic, when compared to the second method employed here. Concerning the P in animal agriculture, the ruminant and non-ruminant animal sources of manure should be viewed separately, because of their different feeding patterns and the lack of phytase in non-ruminants (feed grade P is added to their rations). It is obvious, that the pig and chicken manure, which is difficult to return to the grassland, plays an important role with high amounts.

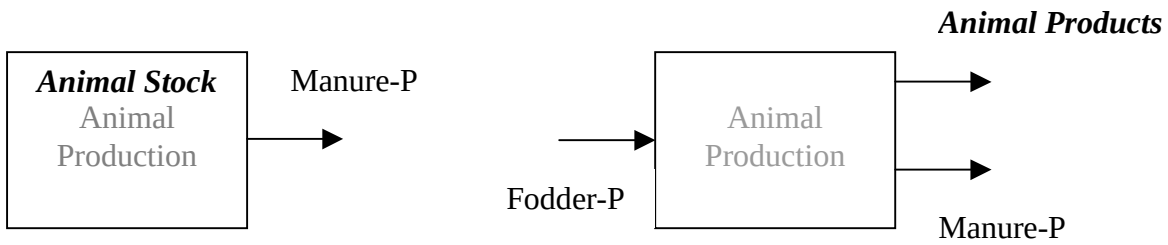

Figure 4.5. Methods used for calculating manure- left- (Zessner et al., 1997), and manure and fodder (Sibbesen and Runge-Metzger, 1995). Data used in estimations are shown in ***italics***.

The second method (Sibbesen and Runge-Metzger, 1995), estimates the P in manure from the information about the total output of animal products (Tables 4.2.a, 4.2.b). According to

Sibbesen, although concentrations in manure differ widely depending on the feeding patterns, the fractionation of fodder-P between manure and animal products remains the same. FAO provides data about "meat on dressed carcass" for different countries (Q_m below), number of slaughtered animals and the carcass fractions. However, the output of the animal agriculture in this work is not Q_m, it is the "live (whole) animals". Therefore, the meat on carcass is converted to whole animals first (Q_m / f_{ca}), and then multiplied by c_{la}, the P-concentration in live animals, given by Sibbesen. For a given animal group, the amount of P removed in live animals (P_{rem}), and sent for slaughter is calculated from the equation;

$P_{rem} = (Q_m / f_{ca}) * c_{la}$

where,

P_{rem}: P in live animals removed from the system agriculture

Q_m: meat on dressed carcass excluding offal and slaughter fat (Data in (FAO, 2004)

f_{ca}: Carcass fraction (dressed carcass/live animal)

c_{la}: mean P concentration of live animals

P in manure is calculated back from the P removed, namely,

$P_{manure} = (P_{rem} / P_a) * P_e$

where,

P_a: Distribution of fodder P on animal

P_e: Distribution of fodder P on excreta

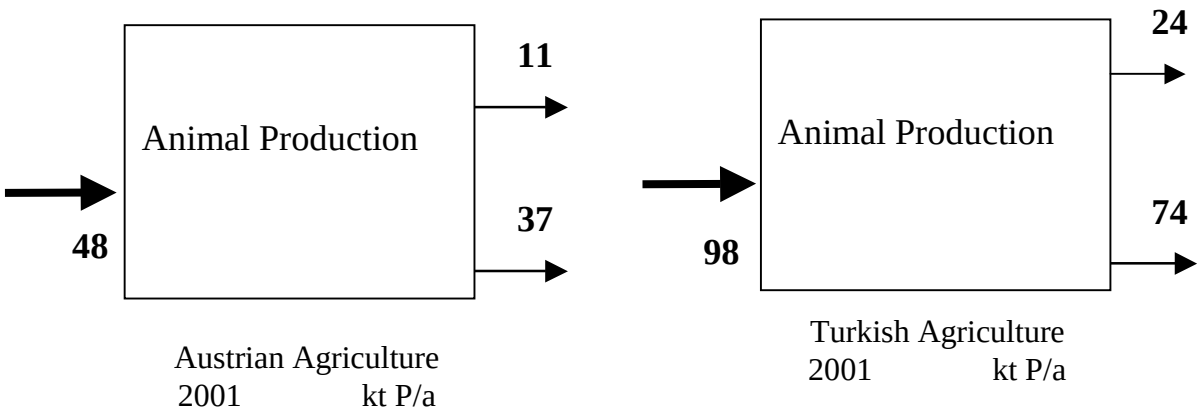

Figure 4.6. 'Animal production' process in Austrian and Turkish Agriculture after Sibbesen, showing the fodder P (input), P in animal products + live animals (output), and manure P (output). (see Figure 4.5 and Table 4.2)

Table 4.1.a. Turkey Manure 2001/ based on (Zessner et al., 1997)

ANIMAL CLASS	ANIMAL NO	GVE KEY	SUM GVE	MIN kg P/GVE a	MAX kg P/GVE a	MIN t P/a	MAX t P/a	% of total
HORSES	271000	0.84	227640	11	15.5	2504	3528	1
CATTLE	10761000	0.72	7747920	11	15.5	85227	120092	42
PIGS	3000	0.15	450	26	33	11	14	0
SHEEP	28492000	0.1	2849200	8.8	13.2	25073	37609	13
GOATS	7201000	0.1	720100	8.8	13.2	6337	9505	3
CHICKENS	258168000	0.004	1032672	79	105	81581	108430	38
GEESE	1497000	0.004	5988	79	105	473	628	0
DUCKS	1104000	0.004	4416	79	105	349	463	0
TURKEYS	3682000	0.006	22092	42	44	928	972	0
DONKEYS*	489000	0.84	410760	11	15.5	4518	6366	2
CAMELS*	1000	0.84	840	11	15.5	9	13	0
BUFALLOES*	146000	0.72	105120	11	15.5	1156	1629	1
SUM						208168	289254	100

Table 4.1.b. Austria Manure 2001/ based on (Zessner et al., 1997)

ANIMAL CLASS	ANIMAL NO	GVE KEY	SUM GVE	MIN kg P/GVE a	MAX kg P/GVE a	MIN t P/a	MAX t P/a	% of total
HORSES	63000	0.84	52920	11	15.5	582	820	2
CATTLE	2155447	0.72	1551922	11	15.5	17071	24055	51
PIGS	3426951	0.15	514043	26	33	13365	16964	36
SHEEP	357888	0.1	35789	8.8	13.2	315	472	1
GOATS	69618	0.1	6962	8.8	13.2	61	92	0
CHICKENS	11077000	0.004	44308	79	105	3500	4652	10
GEESE	22000	0.004	88	79	105	7	9	0
DUCKS	95000	0.004	380	79	105	30	40	0
TURKEYS	700000	0.006	4200	42	44	176	185	0
SUM						35108	47289	100

*GVE values estimated

Animal numbers: (FAO, 2004)

Table 4.2.a. Turkey Manure 2001/ based on Sibbesen (1996)

Meat Class	Slaughtered Animals **N**	meat on carcass **Qm** kg	Carcass fraction **fca**	P conc. **cla** g/kg	Premoved **Prem** t	P on excreta Pe	Pmanure **t**	**Pfodder = Prem+Pman**
CATTLE	1855820	180	0.47	7.1	5046.2	0.78	17891.2	**22938**
PIGS	1078	79.8	0.7	5.5	0.7	0.76	2.1	**3**
SHEEP/GOATS	22300000	15.7	0.47	5	3725	0.77	12469.2	**16194**
HORSES	13000	150	0.6	7	23	0.77	76.1	**99**
POULTRY	520570000	1.21	0.82	5.8	4455	0.58	6152.6	**10608**
Eggs and Milk	Amount mt. no.			P conc. **cp** g/kg				
COW MILK	8552409			1	8552	0.77	28631.9	**37184**
SHEEP MILK	723346			1.5	1196	0.77	3632.4	**4717**
GOAT MILK	219795			1.2	264	0.77	883.0	**1147**
EGGS	528750			1.9	1005	0.8	4018.5	**5023**
SUM					24155		73757.3	97913

Table 4.2.b. Austria Manure 2001/ based on Sibbesen (1996)

Meat Class	Slaughtered Animals **n**	meat on carcass **Qm** kg	Carcass fraction **fca**	P conc. **cla** g/kg	Premoved **Prem** t	P on product Pa	Pmanure **T**	**Pfodder = Prem+Pman**
CATTLE	700000	307.5	0.47	7.1	3251.6	0.22	11528.5	**14780.2**
PIGS	5164000	94.7	0.7	5.5	3842.4	0.24	12167.5	**16009.9**
SHEEP/GOATS	366000	21.9	0.47	5	85.3	0.23	285.5	**370.745**
HORSES	1300	229.2	0.6	7	3.5	0.23	11.6	**15.1**
POULTRY	63407000	1.782	0.82	5.8	799.2	0.42	1103.7	**1902.8**
Eggs and Milk	Amount mt. no.			P conc. **cp** g/kg				
COW MILK	3299567			1	3299.5	0.23	11046.4	**14345.9**
SHEEP MILK	7626			1.5	11.4	0.23	38.3	**49.7**
GOAT MILK	16463			1.2	19.8	0.23	66.1	**85.9**
EGGS	86126			1.9	163.6	0.2	654.6	**818.2**
SUM					11476.4		36902.3	48378.6

Above, using the information on P in animal products and some coefficients, the amounts in the manure and fodder are calculated back. The Tables 4.2.a and 4.2.b summarise the results of these calculations. The P in manure of the Austrian animal production is 37 kt/a, that matches perfectly with the result of the previous method. For Turkey however, the estimate is very low this time (74 kt) compared to the previous method (208-280 kt). In fact, the same amount in Germany was calculated to be 210 kt (Frede and Bach, 2003), and the number of animals in this country are 1,5 fold of those in Turkey (21mio vs 13,7 mio.; livestock units), which are also fed on a rich diet. The fodder P-need of all the animal stock in Turkey would be 120-190 kt, which is not met in reality (Table 4.4.a). So, 70-90 kt manure-P for Turkey is a realistic assumption, which also balances the animal production process (see the balanced system, Figure 4.10.a and 4.10.b). For Austria, bringing the two methods of estimation together, one ends up with a range of 35-37 kt of manure-P produced.

Comparing the P in manure per agricultural land, the values are in a decreasing order for Germany, Austria and Turkey, which are consistent with the animal densities in these countries. Adding to this, the wide-spread use of a manure product (tezek) for heating in Turkish villages, one can see that manure phosphorus entering the agricultural soil is too low in this country.

Table 4.3. Phosphorus associated with the manure vs. animal densities

Country	P in manure (kt)	Agricultural land (km^2)	Manure-P per agricultural area (t/km^2)	Animal no. (10^6 LU)**	Animal densities***
Germany	218*	170 330	1.3	21	123
Austria	36	33 900	1,1	3	87
Turkey	80	387 330	0,2	14	35

*manure-P calculated by (Frede and Bach, 2003), ** all livestock, *** LU(livestock units) / km2; (FAO, 2004)

Land use, animal numbers: (FAO, 2004)

There is a striking difference between Austria and Turkey. Although the animal number in Turkey is more than four fold (Austria: approximately 3 Mio.), the amount of P in manure is only two-fold. This might be due to the relatively high number of non-ruminants in Austria. These animals lack phytase, the enzyme to degrade phytate, for making the P in their feed available to them. Instead, they excrete most of the P in their feed. According to Cromwell:

“The poor bioavailability of P in the natural feedstuffs along with high dietary levels of supplemental P result in much higher levels of P in swine manure compared with that of ruminants.” (Cromwell, 2003). This study also shows that the contribution of non-ruminants to the P in manure (pigs + poultry + eggs) is 37 % in Austria and only 14 % in Turkey (Table 4.2.a, 4.2.b), although the number of eggs and poultry is high in Turkey. The second reason for the discrepancy between the manure-P of Turkey and Austria might also be not enough feeding of animals in Turkey, which is seen as an actual problem of animal agriculture in this country and is also evidenced in much lower carcass weights (Table 4.2), when compared to Austrian animals. More on this subject will be mentioned while calculating the fodder- P.

The fate of the manure is also different in both countries. In Austria, it is assumed, that the whole manure enters the agricultural land, i.e. the process ‘agricultural soil’ (cultivated land + pastures and meadows) here. In Turkey, on the other hand, part of the manure is being used in villages for heating. Determining this portion is even more difficult than determining the manure-P amounts. Some sources give the biomass fuel product ‘tezek’ made of manure to be 5 mio tonnes or 6 mio tonnes (Apaydin, 1998), which used to be 11 mio tonnes before 20 years according to their estimations (TUSIAD, 1998).

On the other hand, (Aydeniz et al., 2004) state that the manure production in 1975 has been 120 million tonnes in Turkey, which was reduced to 76 mio t in 2001 due to a reduction in animal numbers. They claim further, that, out of this amount, 60 % would be converted to biomass fuel (tezek) for household heating and cooking, 30 % would remain, where the animals graze, and only 10 % could be used for fertilising purposes. More on this issue will come at the end of this section, while investigating the P-accumulations in the agricultural soil.

Estimation of fodder P

The estimation of all fodder used in the animal agriculture is not an easy task. Feed from industry, inland fodder production and mineral feed additives, all contribute to the P-feedstuff flow entering the animal production process. In this part, the ‘required’ P in the process animal production will be calculated, and the specific fodder flows will be determined in the coming parts.

The first estimation on the required fodder P per year has already been made in the calculations above (Table 4.2) along with the manure estimations. According to this method, 98 kt and 48 kt of fodder P should enter the process in Turkey and Austria respectively, in order to produce the associated outflow of P with the animal products and meat. Table 4.4 shows the annually required P amounts for animal production. This time, the recommendations for the daily intake of phosphorus for different animal classes and animal stocks of two countries are taken into account, rather than the animal products leaving the system.

Table 4.4.a. Turkey, required fodder P, based on the recommendations

Animal class	Animal No. (1000)	P-need g/d/head		Required fodder P kt/a	
		min	max	min	max
Cattle					
Young (0-2)	4733	13	13	22.46	22.46
Young (>2)	201	14	26	1.03	1.91
*Dairy cows**	5039	20	40	36.78	73.57
Sheep/Goat	35693	3	5	39.08	65.14
Pigs	3	7	10	0.01	0.01
Horses	271	20	30	1.98	2.97
Chicken	258168	0.20	0.25	18.85	23.56
Sum				120.19	189.61

* Cows older than 2 years are taken into this category for Turkey

Animal numbers: (SIS, 2001), (FAO, 2004),

P-requirements: adapted from (Kirchgessner, 1997), and (NRC, 1994)

The Table 4.3 showed earlier that the annual animal production translated into 98 kt fodder-P in Turkey. The recommended amounts for the animal stock is much higher, namely 120 to 190 kt. That is, considering the animal numbers and production capacity, P-turnover in the system is low, i.e. below the required level. This implies on the part of the agricultural sector an inefficiency, but on the part of environment protection and a sparingly use of the substance. For the balancing of the system, the total fodder-P actually consumed in the system (inland fodder + fodder from industry) is assumed to be 100-120 kt based on these results.

Although the differences in animal phenotypes in Turkey and Austria are taken into account, and required rations for dairy cows and chickens are adjusted to be a bit higher in Austria (Table 4.4.a und 4.4.b), the P recommended is still lower than what is being fed to the animals in Austria. (28-39 kt vs. 48 kt). Sparingly use of the substance in the animal agriculture could

bring economical and environmental benefits. The total fodder-P actually consumed in the system (inland + fodder from industry) will be taken to range between 40-48 kt in this case.

Table 4.4.b. Austria, required fodder P, based on the recommendations

Animal class	Animal No. (1000)	P-need G/d/head		Required fodder P kt/a	
		Min	max	min	**Max**
Cattle					
Young (0-2)	1115	13	13	5.29	**5.29**
Young (>2)	363	14	26	1.85	**3.44**
Dairy cows	707	40	60	10.32	**15.48**
Sheep/Goat	381	3	5	0.42	**0.70**
Pigs					
<20 kg	870	2.5	7	0.79	**2.22**
20-50 kg	957	7	10	2.45	**3.49**
>50 kg	1385	10	12	5.06	**6.07**
Mated	230	9	13	0.76	**1.09**
Horses	63	20	30	0.46	**0.69**
Chicken	11905	0.25	0.30	1.09	**1.30**
Sum				28.48	39.78

Animal numbers: (Statistik Austria, 2003 b)

P-requirements: adapted from (Kirchgessner, 1997), and (NRC, 1994)

The fodder import into the subsystem agriculture is determined as the difference of the fodder-P consumed, and the inland fodder production in the following part.

C- Phosphorus Flows in Plant Production

The process plant production takes the net P removed from the soil, converting it into plant products and inland fodder as shown below:

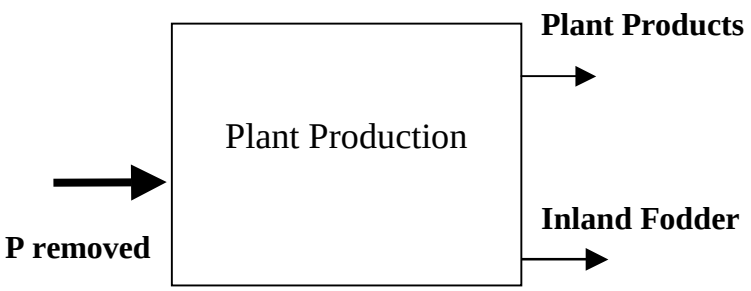

Figure 4.7. The input and output flows associated with the process plant production.

Having a look first, at the crop production, (Table 4.5) shows an almost ten-fold difference between the two countries concerning the P-removal from the soil. It should be noted here,

that the P removal in the table refers to the net P taken up by plants, leaving the residues behind. The P-flow in plant products can be estimated either through multiplying areas under various crops with the corresponding yields and P-concentrations ([A]*[M/A]*[M/M]), or through directly multiplying amounts of production (statistics) with P-contents. The former would also include the P in the residue. Here, the latter method is preferred, as it is a more practical way of estimating the P which is removed from the agricultural soil. That is, data here is based on the production statistics, and not the harvested areas, and show the net removal. The result ranges between 17 to 21 kt P for Austria. Previously, the P harvested from the soil along with crops, was estimated to be 25 kt for Austria, with 8 kt residues turning back to the soil (Zessner et al., 1997)One part of the cereals in the crop production table is used as fodder for animals. The feed amounts and the total P in feed are to be determined next.

Table 4.6 estimates the fodder produced in the domestic agriculture and the amount of P this fodder draws from the agricultural soil. The primary production of the fodder is important information, but the data on it is usually vague or not brought together in a complete way. The table here covers those plants, which are exclusively used / raised as fodder. The italics-faced part in the table indicates the double counting. 20 kt P for Turkey and 7.7-7.9 kt P for Austria are also included in the crop production table (Table 4.5), which however do not leave the system with the plant products, but go to animal production process, along with the other feedstuff. This will be considered while balancing the system.

Table 4.6 also shows, that the inland fodder production is less than the fodder used (as well as the required fodder; Table 4.2, Table 4.4) in both countries. Thus, some fodder is imported into animal production (‘fodder from ind’ in Figure 4.2). The total fodder consumption of the animal agriculture was already estimated to be 100-120 kt P and 40-48 kt P for Turkey and Austria respectively (in “Estimation of fodder P”, Table 4.4). If the inland fodder production (56-72 kt vs 28-34 kt, Table 4.6) will be subtracted from this amount, fodder coming from ITCT can be found. Mainly consisting of net fodder imports and by-products from industry, these amount to (46 +/- 6) and (13 +/- 2.5) in Turkey and Austria respectively.

Feed from industry, imported amounts and by-products, will be determined more in detail while balancing industry (ITCT).

Table 4.5. Crop production and associated P removal in Austria and Turkey (2001)

Plant type	Crop production (10^3 t)		P concentration		P Removal (t P)	
	Turkey	Austria	min	max	Turkey	Austria
Cereals	29570	4827				
Wheat	19000	1508	3.3	3.9	62700-74100	4976.4-5881.1
Barley gerste arpa	7500	1012	3.4	3.9	25500-29250	3440.8-3946.8
Maize	2200	1771	2.6	3.5	5720-7700	4604.6-6198.5
Oats	265	128	3.1	3.5	821.5-927.5	396.8-448
Rye roggen	220	213.5	3.3	3.7	726-814	704.55-789.95
Pulses		250.2				
Lentils	460	-	3.7	3.8	1702-1748	
Chick Peas/ Dry Peas	535	96.4	3.3	4.4	1765.5-1765.5	318.12-424.16
Dry Beans	225		4.25	4.25	956.25-956.25	
Industrial Crops					-	
Sugar Beet	12633	2773	0.3	0.4	3789.9-5053.2	831.9-1109.2
Cotton	900	-	3.3	3.3	2970-2970	0
Tobacco	145	0.230	4.7	5.7	681.5-826.5	1.081-1.311
Oil Seeds						
Cotton Seed -Rapeseed	1438	146.5	6	6	8628-8628	879-879
Sunflower	650	50.6	8.4	10	5460-5850	425.04-455.4
Soybeans	50	34	5.5	5.9	275-295	187-200.6
Peanut	72	-	4	5	288-360	
Tuber Crops						
Potatoes	5000	694.6	0.53	0.65	2650-3250	368.138-451.49
Dry Onions	2150	95.7	0.3	0.36	645-774	28.71-34.452
Vegetables						
Water Melon &Melon	5795	-	0.1	0.2	579.5-1159	0
Tomatoes	8425	26.6	0.2	0.3	1685-2527.5	5.32-7.98
Cucumber and Gerkin	1740	43.7	0.2	0.3	348-522	8.74-13.11
Cabbage	710	107.7	0.3	0.3	213-213	32.31-32.31
Carrot	230	64.9	0.3	0.4	69-92	19.47-25.96
Chilli. Peppers	1560	7.9	0.2	0.3	312-468	1.58-2.37
Spinach	210	7.8	0.5	0.5	105-105	3.9-3.9
Lettuce	350	60.5	0.3	0.3	105-105	18.15-18.15
Green beans	490	5	0.4	0.5	196-245	2-2.5
Green peas	60	12.5	1.1	1.2	66-72	13.75-15
Eggplants	945	-	0.2	0.3	189-283.5	
Pumpkin	385	7	0.39	0.44	150.15-169.4	2.73-3.08
Cauliflower	88	-	0.5	0.6	44-52.8	
Asparagus	-	2	0.6	0.7		1.2-1.4
Garlic	103	-	1.3	2	133.9-206	
Fruits & Nuts						
Bananas	75	-	0.2	0.3	15-22.5	
Figs	235	-	0.2	0.2	47-47	
Plum	200	75.3	0.2	0.2	40-40	15.06-15.06
Grape	3250	330	0.2	0.2	650-650	66-66
Cherry&Sour cherry	370	37.6	0.2	0.2	74-74	7.52-7.52
Citrus Fruits	2478	-	0.15	0.2	371.7-495.6	
Ananas		47.2	0.15	0.2	0	7.08-9.44
Peach	460	5.1	0.12	0.12	55.2-55.2	0.612-0.612
Apricot	517	11.2	0.23	0.23	118.91-118.91	2.576-2.576
Berries & S.berries	55+117	7.2+18.4	0.2	0.2	34.4-34.4	5.12-5.12
Hazelnut	625	-	3.4	3.4	2125-2125	0
Walnut	116	15.7	3.8	3.9	440.8-452.4	59.66-61.23
Apple	2450	409.7	0.05	0.1	122.5-245	20.485-40.97
Pear	360	108.6	0.1	0.1	36-36	10.86-10.86
Olive	600	-	0.1	0.2	60-120	0
Tea	825	-	0.4	0.4	330-330	0
Σ					**133995-156334**	**17466-21165**

Amounts:

(SPO, 2003), (Statistik Austria, 2003 a), (FAO, 2001)

Concentrations:

(Cornell University and Department of Crop and Soil Sciences, ; Zessner et al., 1997), (Geigy, 1977), (TSN, 2003), (Albers et al., 1993)

Table 4.6. Inland fodder production and the associated P-removal from soil

Fodder type	Net **Dry Weight** (1000 t) Amount produced as fodder		P concentration (kg/t dry matter)	P Removal (t P)	
	TR	AU		TR	AU
Pastures and meadows	12000-13000	6296	2.4-3.4	28800-44200	15110-21406
Forage plants					
Clover		63	3.4		214
Alfalfa	1306	59	3.3	4310	195
Clover grass		456	2.4		1095
Silage maize	290	918	2.7	783	2479
Beets		7	1.8-2.3		13-16
Cow vetches	237		3.4	806	
Wild vetches	3		3.4-3.5*	10-11	
Sainfoin	322		3.4-3.5*	1095-1125	
Other forage plants	100	42	2.4-3.5*	240-350	101-147
Grains					
Fieldbeans		6.4	4.8-6.9		31-44
Cow vetches	111		3.4	377	
Triticales		135	4.6-4.8		621-648
Wild vetches	7		3.5-4.5*	25-32	
Others	5	26	3.5-4.5*	18-23	91-117
Wheat	144	355	2.9	418	1030
Barley	4900	635	2.9	14210	1842
Maize	1400	1171	3.1	4340	3643
Oats	156	98	3.1	484	304
Rye	127	83	3.6	457	300
Oilseeds		39	7-9		273-351
Pulses		87.5	4-5		350-438
Potatoes		8	0.68-0.83		5-7
Σ				56373-71927	27697-34108

*estimation (general for legume seeds and legumes)

Amounts:

(BMLFUW, 2002) (Avcioglu et al., 2000) (Kilic, 2000)

Concentrations:
(Beaton et al., 1995; Cornell University and Department of Crop and Soil Sciences, ; Zessner et al., 1997)

D- Agricultural Soil

To discover these aspects, the land use patterns will be demonstrated first, as the relative sizes of the grasslands and arable lands play also an important role concerning the P-flows.

Table 4.7. Land Use 2001

	Turkey (1000 ha)	Austria (1000 ha)
Total area	77482	8386
Agricultural area	38733	3390
Arable land	23805 (62% of agricultural)	1399 (41% of agricultural)
Permanent crops	2550	71
Permanent pasture	12378	1920

(FAO, 2004)

Arable land: land under temporary crops <5 yr

Mineral P covers all the chemical P-fertilisers. Data concerning fertilisers is taken from (FAO, 2004) and the amount given there as "fertiliser consumption" is assumed to enter the process agricultural soil. Table 4.8 shows average P-fertiliser consumption per year in two different periods (1970-1974 and 1997-2001), and the P applications per agricultural area in 2001, comparing these to the European and world averages.

Table 4.8. Average annual P fertiliser consumption (kt P /a)

Years	Turkey	Austria	Europe	World
1970-1974	97	52		
1997-2001	263	22		
2001	205	21	1755	14370
	per cultivated area* kg P/ha (kg P_2O_5/ha)			
2001	8 (18)	14 (32)	6 (14)	9 (22)

* here: area under permanent crops + arable land

Amounts: (FAO, 2001; FAO, 2004)

The flows of P through runoff, erosion and leaching are determined in this part. However, the necessary data in terms of measurements is not yet available on the country scale. Phosphorus can be carried away through wind erosion, with the eroded particulates and washed away in a dissolved form. The low solubilities and high sorption rates of phosphorus compounds limit

their leaching into groundwater (Smil, 2002). Measurements on the erosion, runoff and infiltration, the amounts leaving the soil and the pathways of the substances (phosphorus) drifted with them will clear up the situation in the near future. At the moment however, literature values of annual P transport pro ha are the best information available. Taking the highest range from a variety of studies is the reason of the high uncertainty in the below table. Erosion-susceptible areas are considered separately. Erosion and runoff are considered together, as for the purposes of this study, they are seen as a loss from the soil and their pathways and the sinks are so far not certain. The focus will be on what is known about the amount carried away, and not the mechanisms in this study.

Table 4.9. Annual phosphorus loss from the soil through runoff and erosion

Area sown	kg/ha	TR (ha)	AT (ha)	TR t P /a	AT t P /a
Maize	10-20	550000	171420	5500-11000	1700-3400
Cotton, S.beets, Wine	4-10	1568400	93700	6300-15700	370-940
Crop, others	2-4	16164600	1705780	32300-64700	3400-6800
Sum Cultivated				44100-91300	5500-11200
Other areas					
Pasture	0.2-1	12378000	1920000	1240-2480*	3400-1920
Forestry	0.1-0.7	20713000	3623227	1036-2071*	362-2536
Sum**				45300-94000	5900-13100

* Turkey; 0.1-0.2 kg/ha/a for pasture and 0.05-0.2 kg/ha/a for forestry after (Dahl and Kurtar, 1993)

* *sum is excluding forestry losses

Areas: (SIS, 2001), (BMLFUW, 2002), (Statistik Austria, 2003 a)

(Erosion + runoff) loads: (Haygarth, 1997), (Sharpley, 1999), (Glenck et al., 1995), (Braun, 1997), (Zessner et al., 1997)

The second output flow from the Agricultural Soil, 'Removed P', is not a loss, but the productive input to the plant production process (Figure 4.2). This flow is one, which can not be measured by any means, and thus can not be monitored either, without the means of Material Flow Analysis. Here, it is estimated using the sum in the Crop Production table (Table 4.5) and Inland Fodder table (Table 4.6) as follows:

Removed P = Crop Production + Inland Fodder – Double counting

Plant products = Crop Production – Double counting

P-Accumulations in the Soil

Defining a process called ‘agricultural soil’ as such (Figure 4.2 and Appendix A) has both advantages and disadvantages. It makes the system into an easy to understand one, where the whole P taken up from soil for agricultural purposes is depicted, and the primary production of food and feed is separated from the animal production. However, the system picture in Figure 4.2 conceals one important fact relevant to P-management- namely the P accumulation in the soil-, which is unveiled in this part.

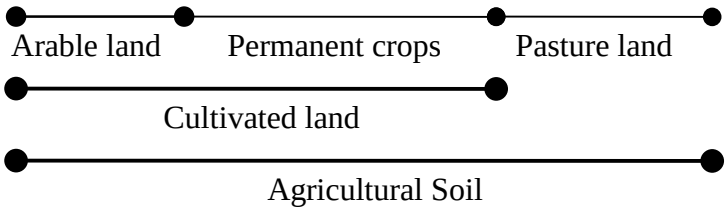

Figure 4.8. The classification of the agricultural soil for the purposes of this study

It is generally established, that the availabilities of P are rather low in the soil, depending on the soil characteristics and the solubilities of the applied P. One part of the added fertilizer P, which is readily available, gets in a relatively short time unavailable making stable compounds. However, soil scientists today know, that the P is added to the existing soil stock to fertilise the soil, and not the plant. Depending on many factors, like the size of this stock, phosphorus gets mobile and immobile at the same time.

Fertilizers, are applied on a limited area, where crop is being raised. This area, in this part, will be referred to as the ‘cultivated land’, which is the sum of ‘arable land’ and ‘permanant crops’ (see Table 4.7, Figure 4.8). In the system agriculture (Figure 4.2 and Appendix A), the process agricultural soil covers also the pasture land. In this part, the agricultural land is divided in order to distinguish between the regularly fertilized land (called here cultivated land) and the pasture land. Strong assumptions were made to enable this: It is assumed, that the whole agricultural activity takes place on the cultivated land and the pasture land, defined as ‘agricultural area’ in FAO statistics. The mineral fertiliser enters to the process ‘cultivated land’ only (Figure 4.9). For Austria, the manure P is distributed homogeneously over the whole agricultural area, meaning both ‘cultivated land’ and ‘pasture land’ receive the same amount pro ha. For Turkey, the coefficients (percentages) mentioned in the last part of “Estimation of manure P” are used. Concerning plants, only the fodder named ‘pastures and meadows’ (Table 4.6), removes the P from the ‘pasture land’, all other crop is assumed to be raised on the ‘cultivated land’. Inputs and outputs, the changes in the soil storages are

depicted in the flow diagrams below. The flow of P entering the soil through sludge and compost is determined in waste and wastewater management systems, and integrated then into this part through iteration. Method can not help identifying the soil accumulation in Turkey, because of the huge uncertainty in erosion loss at this scale. That is, the uncertainty of accumulation is caused by the one in the erosion flow.

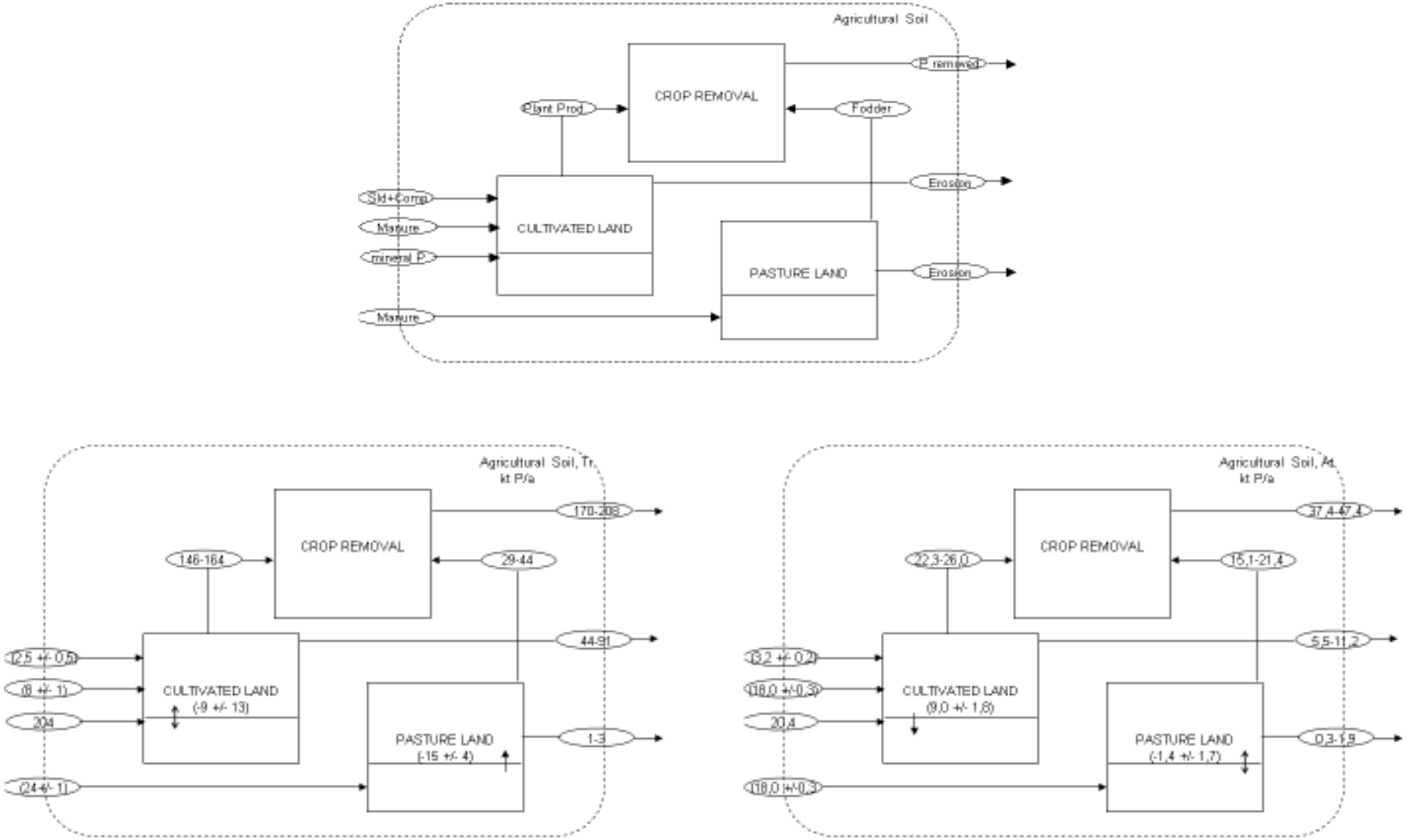

Figure 4.9. Balancing the agricultural soil

4.1.2.3 Balanced Systems

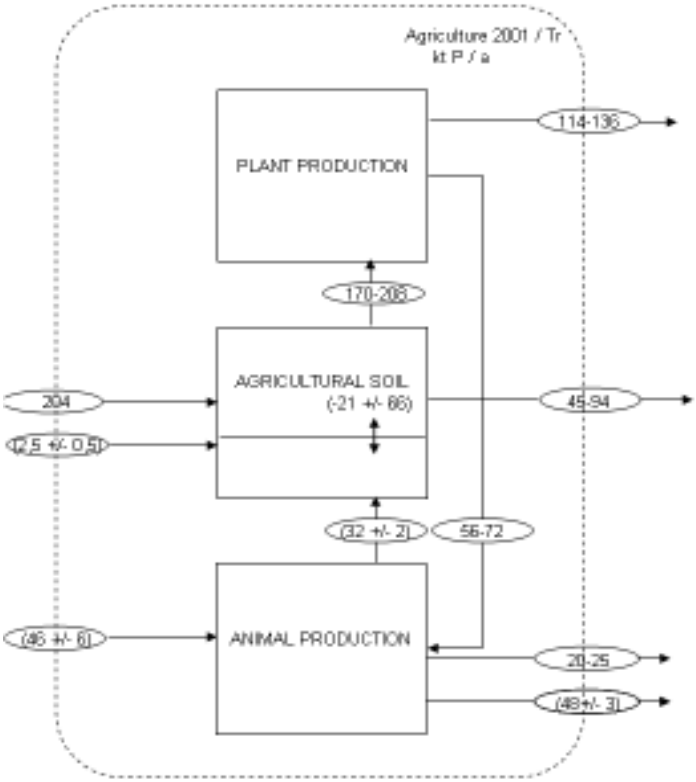

Figure 4.10.a. P-balance in agriculture, Austria, 2001

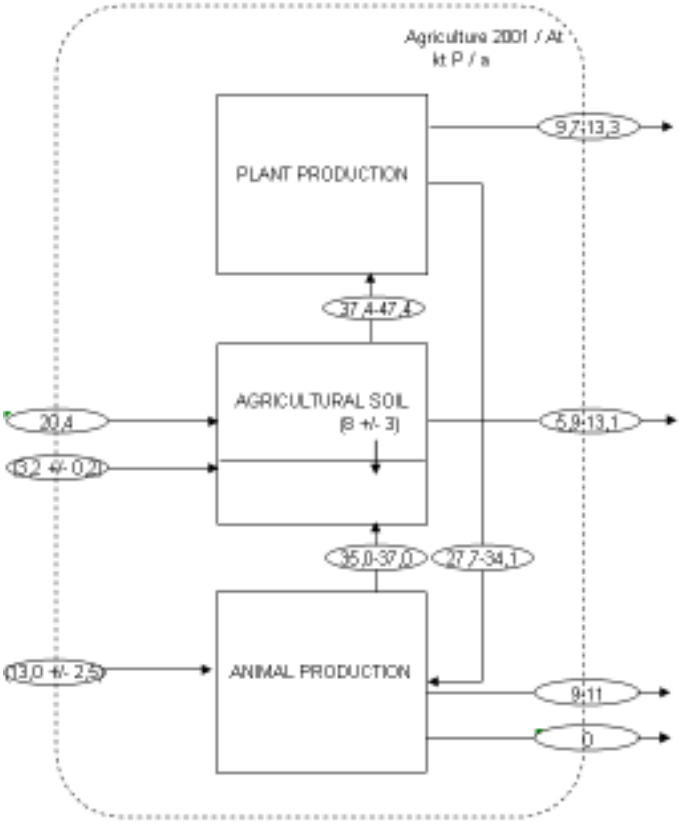

Figure 4.10.b. P-balance in agriculture, Austria, 2001

4.1.3 ITCT (Industry, Trade, Commerce, Tourism)

The process (subsystem) ITCT involves industry, commerce, trade and tourism. In both countries, it is the sector, which uses imported phosphates as raw material for production (like in fertilizer industry), as intermediate goods for further processing (like food industry), or on products for finishing purposes (metal industry). The P first enters this sector, in the form of phosphate rock (P-rock), phosphoric acid or in finished goods, and is then distributed to other sectors. The leading sector within ITCT is the fertilizer industry. Examples for other industrial uses of phoshorus involve: industrial cleaning, animal feed additives, food preparation and additives, drinks additives, toiletry products, pharmaceuticals, biotechnology, biocides, water and wastewater industries, metals industry, textile production, washing, paint manufacture, flame retardants, oil industry, ceramics, clay, paper industry.

4.1.3.1 System Definition for the Subsystem ITCT

The system analysis of the ITCT is different than those for other sections. In the following, balancing is carried out in two steps. The first scheme in the Figure 4.11 is used to gather the data systematically, and shows the gaps in data availability. It is thought as a preferable system to analyze and to manage phosphorus in ITCT, a better system would be one separating manufacture and distribution and managing the wastes also separately. However, even here, the flows depicted with broken and dotted lines could not be quantified. Industrial wastewater and waste inventories, as well as the inter-sectoral flows of goods are needed to balance each sector. To make the system more straightforward and easy to follow, as well as to mask off unknown flows, the system shown in Figure 4.12 is established then. It does not include more information, but gathers flows together and reduces ITCT into 3 black boxes.

Information on production can easily be left out in this construction without disturbing the balance, as all production is based on ‘imported P’, and no other P is generated in the system. Therefore, in balancing, only imports, exports, and the amounts leaving the system for consumption are taken into account. On one hand preventing the double-counting, on the other hand, this might cause information loss in the processes due to uses like industrial cleaning or wastes. The picture could be quantified after much effort (Figure 4.13.a and 4.13.b), and summarised in Figures 4.14.a and 4.14.b as explained in the following text. The details are given below, more on the system in Figure 4.12 can be found in the annex.

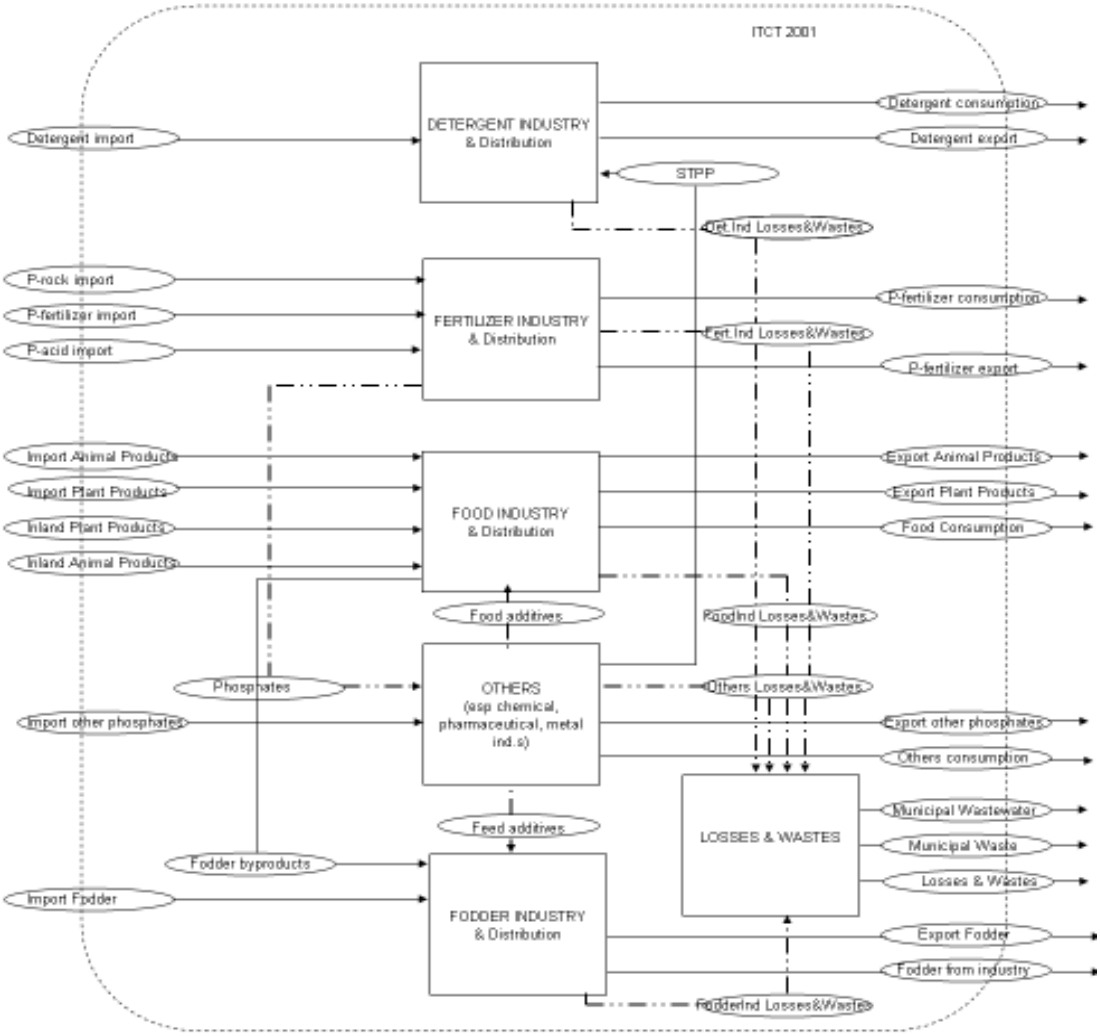

Figure 4.11. The conceptual framework for the subsystem ITCT as a starting point for balancing

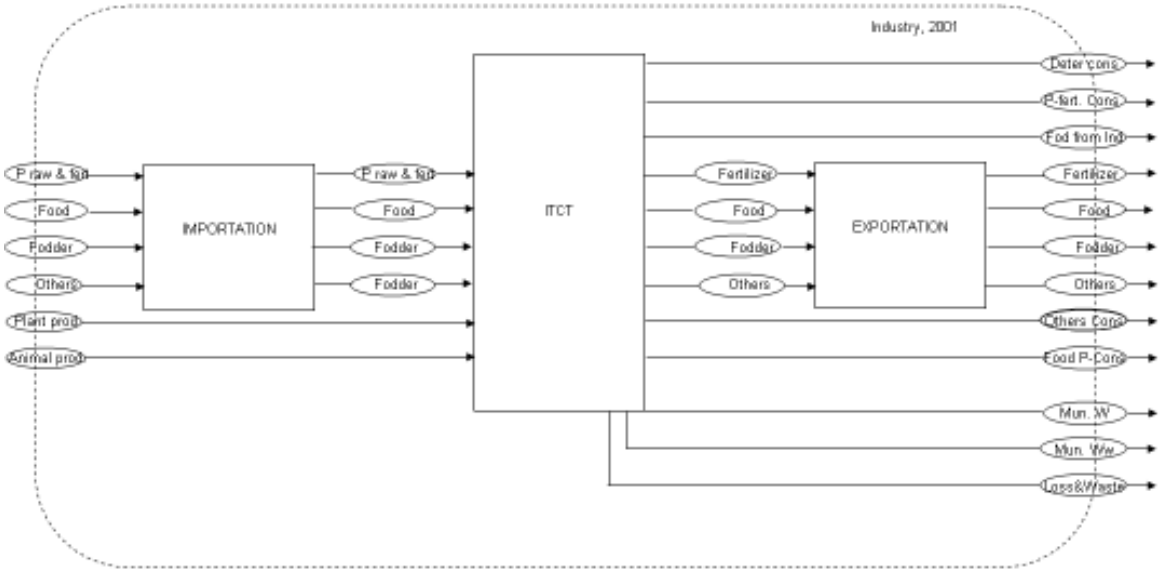

Figure 4.12. The Material Flow Analysis for the subsystem ITCT.

4.1.3.2 Balancing

The flows ‘plant products’ and ‘animal products’ entering the food industry and the outgoing consumption flow, ‘fodder from industry’ have already been determined in the section ‘agriculture’ through balancing. The amount of municipal wastewater is determined in the section ‘wastewater management'. The food-P consumption is estimated in the section ‘household’ and will be used here (Figures 4.13 and 4.14). All other flows are estimated in this part and explained in detail below. Estimation of the fodder amounts, including the by-products has been the real challenge of this part.

A- Industrial Use of Phosphate in Austria and Turkey

There are two phosphorus fertilizer producers in Austria, Donau Cemie AG and AMI Agrolinz Melamine. In Turkey, the number of the fertilizer producers is six, which are mainly providing goods for the domestic consumption. Another important industrial use of P - as a builder in detergents- is continuing in Turkey, but not in Austria. Apart from these direct uses of phosphorus, those, which have high P turnovers are food and fodder industries. All other industries using P in their processes are covered in the group ‘others’ for the sake of simplicity.

B- Fertilizer Industry

The good ‘P raw & fertilizer’ includes all phosphates entering the fertilizer industry. The P-rock imports of chemical industry are partly directed through fertilizer industry. The three input goods to the process are given in the Table 4.10, together with the production, consumption and the export. Export of P-acid is negligible. The main phosphate fertilizer products consumed are ammonium phosphate, concentrated superphosphate and other complex phosphates. The unit of measurement is t P_2O_5 in FAO database, except for imported P-rock, which is given as t product. All were converted into kt P here.

Concerning the raw material, phosphate rock (given as ‘natural phosphates’ in FAO), Turkey imported 593 kt of the material in 2001. State Planning Organization of Turkey estimates the import of P-rock as 613 kt for the same year (SPO, 2000). Although there was no data concerning the natural P-rock imports for 2001 into Austria, data on the past five years in the FAO database shows that an amount of roughly 200 kt has been imported on a yearly basis. This estimation is reasonable: Alone Donau-Chemie (one of the two fertilizer plants in

Austria) used 110 kt phosphate rock input for the production in 2001(Wiesenberger 2002). P-rock contains 27-38 % P_2O_5 (12-17 % P) (Glennie E.B. et al., 2002). This means, that Turkey imported 70-100 kt P through P-rock in 2001. Austria must have imported around 24-34 kt as P (200 kt rock), also, in order to reach the production level shown in the table. In case of Austria, the P-fertilizer production amount is a good indicator or approximation to evaluate the import, as the second important industrial use of phosphorus, STPP as a detergent builder, was already banned in Austria. The reason why the fertilizer production is higher than the imported P-rock phosphorus in Turkey can be explained by the stocks available from the previous years and / or imported amount of phosphoric acid (% 100 P_2O_5). The balance should be the wasted P in this industry and the other industrial uses, which are much less in amount.

Table 4.10. Imports, exports, production and consumption of phosphates in 2001, kt P/a

	Turkey	Austria
P-fertilizer Import	91	8.5
P-rock Import	70-100	24-34
P-acid Import	64	0.2
Σ Import	**225-255**	**32-42**
P-fertilizer Export	5	20.1
P-fertilizer Production	138	32.4
P-fertilizer Consumption	204	20.4

Data source; (FAO, 2004a)

According to the FAO data used here, national production covers the production based on phosphoric acid and phosphate rock only, and production based on imported finished fertilizers are excluded from the national production, in order to avoid double counting. That explains also, why the fertilizer production amounts given here are less than the fertilizer production levels in national sources. The fertilizer producing industries of Austria, AMI Agrolinz and Donau Chemie AG together produced around 37 kt P in 2001 (personal communications with Josef Gremel, Donau Chemie AG and Emmerich Jäger, AMI Agrolinz Melamine International GmbH). Research Planning and Coordination Department, Ministry of Agriculture and Rural Affairs, Turkey, gives the P-consumption through fertilizers around 270 kt P for the year 2000 (3697359 t fertilizer with 17 % P_2O_5), which is close to the FAO

data. The Table 4.10 shows, that the P-fertilizer consumption of Turkey is ten-fold when compared to that of Austria.

C- Detergent Industry

Laundry and dishwasher detergents may contain phosphorus, present as sodium tripolyphosphate (STPP). STPP is used as a builder in detergents and is the major non-fertiliser phosphorus product in current chemical production. Builders develop optimum water conditions for the operation of surfactants. Austria is one of the few countries, where the use of phosphorus in the detergents was banned, totally eliminating the use of STPP for this purpose (Glennie E.B. et al., 2002). Only the powdered and tablet dishwasher detergents partly include phosphorus (WKÖ, 1999). In Turkey, on the other hand, there is no ban on the use of P-based builders; attempts to reduce the P content to 1 % in detergents have been unsuccessful by now (personal communication, Vuranel Okay, General Secretary of the Association of Soap and Detergent Industrialists). The dispute over the quality and the environmental effects of detergent builders STPP and Zeolite A, its substitute, is still continuing. Some trade organizations claim, that Zeolite A could harm wastewater removal and treatment systems, increasing suspended solids and the amount of sludge. It is generally established that STPP is superior as a builder; however it can harm the environment, where there is no efficient P-removal from the wastewater, or a reasonable way of sludge disposal.

Data on the annual consumption of detergents and their STPP contents would enable to estimate the phosphorus flow from the detergent industry to the households. The Table 4.12 includes the amounts consumed in the household.

As explained in the Section 'Others' below, there must be around 20 kt net import of STPP-phosphorus to Turkey. The consumption of the detergent-related phosphorus (36-43 kt P) is however higher. Data on finished detergent import is checked for this. Export Promotion Center of Turkey (IGEME, 2004), supplied the data on the detergent import and export[1] for Turkey in 2001. From this data, the associated P-flows are calculated. According to this, there should be a detergent import worth 3.1 kt P, and export of 7.2 kt P (The same P-flows for Austria are assumed to be zero). This makes clear, that some STPP is produced in the country as well, which will not be determined here.

[1] The data belongs to the group numbered 3401, 3402 in the HS (harmonised system) or SITC 554 of trade statistics. SITC 5542 group is assumed to have 6% P.

Table 4.11. Detergent use and the associated phosphorus consumption in the household

Kt/a	Detergent consumption		STPP content % [3]		P consumed kt/a[4]	
	Turkey [1]	Austria[2]	Turkey	Austria	Turkey	Austria
Laundry detergents	490	59	24	0	29	0
Laundry additives	83		<1	0	0	0
Surface Cleaners	118		1-20	0	0-6	0
Bleachers	162		<1	0	0	0
Dishwashers	133	13	24	?	8	0.3-0.5[5]
Solid soap	86		-		0	0
Liquid soap	24		-		0	0
Sum					**36-43**	**0.3-0.5**

[1] 2003 data, Source: General Secretary of the Association of Soap and Detergent Industrialists

[2] 1998 data, (Glennie E.B. et al., 2002), only "automatic dishwasher detergents"

[3] self estimations based on literature

[4] STPP is assumed to contain 25 % P

[5]Dishwashing detergents in Ausrtia are assumed to contain 2-4 % P.

D- Fodder Industry

As mentioned in Section 4.1.2 Agriculture, there are mainly two flows of fodder entering the animal agriculture: Inland fodder from agriculture (already calculated), and fodder from industry, including mixed fodder, feed additives, by-products, and the net import. Here, the estimation of this latter flow will be made.

Industrial by-products serving as fodder make up the output flow named "fodder by-products" from the food industry. In this part, this flow enters the process fodder industry. The P-flow through these goods is covered in the table below. The by-products of dairy are neglected; those from meat production were not considered either, because of the ban on the use of meat and bone products. As the amounts of goods in this table are rough estimations for the year 2000, and P-concentrations of all by-products are difficult to find in the literature, certain products in a group are converted to P-flows as a group, multiplied by a general P-range.

Table 4.12. Fodder-P in the by-products from the industry (Data for 2000)

	P-content g/kg DM		Dry Mass t/a		TP t P/a	
By-products	min	max	At	Tr	At	Tr
Oilcake	11	14	147367	1044000	1600-2100	11500-15000
Sunflower				444000		
Cotton				558000		
Soybean				42000		
Others						
Bran	11	14	106652	1445000	1200-1500	16000-20000
wheat meal			76728			
wheat bran			12374			
rye meal			15113			
rye bran			2438			
Molasses	2	2	81956	518000	165	1000
Sugar beet meal	2.5	2.5	105795	1339750	270	3500
Starch production			72016			
	3.6	3.6	23600		85	
	3	3	50200		150	
	3	3	27900		85	
Beer production			38317			
	4.6	4.6	5674		25	
	7.6	7.6	29340		220	
	18.2	18.2	3304		60	
Sum By-products					3900-4600	32000-39500

Amounts: (Amounts converted to dry mass, where necessary),

(Avcioglu et al., 2000), (Schlögl, 2003).

Concentrations: (Eder, 2004), (Wlcek, 2002)

Imported amounts of fodder as shown in Table 4.13 are calculated as follows: Foreign trade statistics in both Statistics Institutes, Turkey and Austria, give the amounts of imported and exported fodder with the SITC-2 code 08, named “feeding stuff for animals (not including unmilled cereals)”. Data from the Ministry of Agriculture is used to complement these tables in case of Turkey. In case of Austria, net import of “unmilled cereals as fodders” could be determined indirectly. In the 2001 supply balance of Statistik Austria for plant products (Versorgungsbilanz 2001/2002 für pflanzliche Erzeugnisse, Stand 4 April 2003) it is possible to see the available amounts of fodder. Inland production of fodder was already determined in detail before (table 4.6). To estimate the net import of unmilled cereals, the inland production of fodder cereals is subtracted from the available amounts in the supply balance (Table 4.14). This amount is added to the flow ‘import fodder’ in the balanced system picture.

Table 4.13. Imports and Exports of Fodder (not including unmilled cereals for Austria)

	Import t/a		Export t/a		P-content	AT t P/a		TR t P /a	
Fodder type	AT	TR	AT	TR	g/kg	imp	exp	imp	exp
Mixed fodder*		1500		2	5-11	0	0	7-15	<1
Fodder for cats & dogs*	70268	4925	68179	62	8-10	506-630	490-620	35-44	<1
Feed additives*	47660	36443	105832	117000	5-10	210-430	480-950	160-330	530-1050
Maize		535254		2882	2.6-3.5	0	0	1250-1690	7-9
Barley gerste		4907		102335	3.4-3.9	0	0	15-17	310-360
Meatmeal**	145		79		29	4	2	0	0
Fishmeal**	6027	36268		223	22	119	0	718	5
Bran, Residues of	6466	44268.5	8011	45606	7-11	41-64	51-80	280-440	290-450
Leguminous plants	11	5866	347	55					
maize	10	2685	107	22					
rice	95	0.5	22						
wheat	5366	32561	7078	39149					
cererals	984	3156	457	6380					
Oil Cake & meal from	564182	439197	63599	39622	7-11	3554-5586	400-630	2800-4400	250-390
soybeans	515848	377621	6483	8297					
cottonseeds	1782	10		31165					
linseed	9676		1600	27					
Sunflower seeds	10960	53497	14049	26					
Rape or colza seeds	17249	1537	40717						
Palm nuts or kernels	5400								
Soybeans		321252			5.5-5.9	0	0	1590-1750	0
Blackbeans*				250	4.5-6	0	0	0	<1
Residues of starch manufacture	33265		46269		3-3.6	90-110	125-150	0	6.5-8
Residues of sugar manufacture	14446		23322	3604	2-2.5	25-30	40-50	0	15-40
Residues of brewing or distilling	1087		5922	3100	5-15	5-15	27-80	0	0
Hay and fodder									
Cereal Straws and Husks	38459		10733		3.5-4.5	120-160	35-45	0	1-3
Lucerne meal & pellets*	4763		452	1179	1.5-3	7-13	1	0	<1
Forage products	50963		44955	111	3-3.5	140-160	120-140	0	0
Vegetable residues*	6417		2038		2-4.5	12-25	4-8	0	0
SUM	**1414796**	**1907480**	**451001**	**401204**		**4840-7200**	**1770-2800**	**6800-9300**	**1400-2300**

Concentrations:

*self estimation, **(Klis and Versteegh, 1996),(Wlcek, 2002), (Eder, 2004)

Amounts (Dry solids assumed to be 90 %):

At: Statistik Austria, Der Warenverkehr nach allen Gliederungsstufen des SITC-revised 3 im Gesamtjahr 2001. **Tr:** State Institute of Statistics, Turkey, Import-export of SITC-revised 3, code 08, for the year 2001, State Planning Organisation, through the Ministry of Agriculture and Rural Affairs, Imported and Exported Amounts of feedstuff , 1999-2003

The data availability and consistency concerning feed stuff is highly poor. Different institutions have different systematic of collecting and tabulating data. The way the statistical data was compiled does not help to identify substance flows. It is very difficult to estimate the phosphorus concentration in a group of goods, which are considered as one flow in statistics.

Table 4.14. Estimation of net imports of unmilled cereals as fodder into Austria in 2001 (kt)

Cereals	Supply	Inland Production	Net Import	P-conc. **g/kg**	Net imp t P/a
Wheat	503	355	148	3,3-3,9	490-580
Rye	96	83	13	3,3-3,7	43-48
Barley	738	635	103	3,4-3,9	350-400
Oats	114	98	16	3,1-3,5	50-55
Maize	1362	1171	191	2,6-3,5	500670
Triticales	143	135	8	4,6-4,8	37-38
Sum					**1470-1780**

The above tables show, that the total fodder from ITCT through net imports and by-products make up 8,5-10,8 kt in Austria, and 37,4-46,5 kt in Turkey. These values are already in the range determined in section agriculture as ‘fodder from industry’ to be (46 +/-6) and (13 +/-2.5).

E- Food Industry

Food industry is the only industry, which has P-input from the inland production. Animal products and plant products leaving the agriculture enter this sector. Imported and exported foodstuff is also determined in these two categories, animal products and plant products. For import and export data, as in Table 4.15, food balance sheets for Austria and Turkey are used (FAO, 2004b). Consumption data from the balance sheet will be presented in the process household.

Table 4.15. Food Import & Export and the associated P-flows in Austria and Turkey, 2001

Item	Concentration		Turkey				Austria			
	g/kg P		Import		Export		Import		Export	
	min	max	kt	t P/a	kt	t P/a	Kt	t P/a	kt	t P/a
Cereals –Excl.Beer	3.3	3.5	1181	3897-4134	1708	5636-5978	785	2591-2748	1050	3465-3675
Starchy Roots	0.4	0.5	48	19-24	108	43-54	101	40-51	61	24-31
Sugar &Sweetener	0.1	0.1	19	2-2	1009	101-101	421	42-42	285	29-29
Pulses	4	4.5	151	604-680	361	1444-1625	11	44-50	8	32-36
Treenuts	3.5	4	12	42-48	468	1638-1872	63	221-252	28	98-112
Oilcrops	6	8	586	3516-4688	77	462-616	206	1236-1648	83	498-664
Vegetable Oils	0	0.1	738	0-74	229	0-23	173	0-17	96	0-10
Vegetables	0.4	0.4	9	4-4	1232	493-493	483	193-193	165	66-66
Fruits – Excl. Wine	0.2	0.2	92	18-18	2550	510-510	1170	234-234	623	125-125
Stimulants	3	4	75	225-300	38	114-152	158	474-632	92	276-368
Alcoh. Beverages	0.1	0.15	4	0-1	37	4-6	152	15-23	100	10-15
Meat	1.8	2.2	1	2-2	24	43-53	177	319-389	245	441-539
Offals, Edible	2.5	3	0	0-0	0	0-0	5	13-15	34	85-102
Animal Fats	0	0.2	125	0-25	11	0-2	30	0-6	85	0-17
Milk – Excl.Butter	0.9	1.2	40	36-48	17	15-20	820	738-948	1353	1218-1624
Eggs	1.9	2.1	2	4-4	19	36-40	29	55-61	9	17-19
Fish, Seafood	2	2.5	196	392-490	42	84-105	151	302-378	5	10-13
SUM animal prod.				434-569		179-220		1426-1833		1771-2313
SUM Total				**8761-10541**		**10624-11649**		**6516-7722**		**6393-7442**
Meat/Total				0.04-0.05		0.02-0.02		0.22-0.24		0.27-0.31

Amounts: FAOSTAT data, 2004

F- Others

Another important part of the imports and exports of inorganic phosphates are determined through the import and export statistics, with the HS code 2835: phosphinates, phosphonates, phosphates, polyphosphates (employed in detergent industry, food and metal industry, as feed additives, and for other uses). The below table shows most of these phosphates.

Table 4.16.a. Imported exported amounts of other phosphates, Turkey, 2001

	Imp kg	Exp kg	% P	Imp P t/a	Exp P t/a
Monosodiumphosphate	205949	251650	25-26	52-54	63-65
Disodiumphosphate	82209	100	21-22	17-18	<1
Trisodiumphosphate	1193492	300	18-19	218-228	<1
Other ca-phosphates	465485	11214777	10-23	45-107	1073-2584
Phosphinates&Phosphon.	249000	2564000	22-25	55-62	564-641
Potassiumphosphate	165000	0	18-22	30-36	0
Dicalciumphosphate	2256000	2590000	17-18	384-406	440-466
Other Polyphosphates	3300000	29000	19-31	627-1023	5,5-9
Sodiumtripolyphosphate	86831621	79451	25-25	21708	20
Sum				**23133-23641**	**2214-3781**

Table 4.16.b. Imported exported amounts of other phosphates, Austria, 2001

	Imp t	Exp t	% P	Imp P t/a	Exp P t/a
Mono& di sodiumphosphate	593	108	21-25	125-154	23-28
Trisodiumphosphate	431	66	18-19	78-82	12-13
Other ca-phosphates	45204	1550	10-23	4520-10397	155-357
Sodiumtripolyphosphate	4677	2557	25-25	1169	639
Phosphinates & Phosphonates	152	2347	22-25	34-38	516-587
Potassiumphosphate	1073	353	18-22	193-236	64-78
Dicalciumphosphate	7650	496	17-18	1300-1377	84-89
Other Polyphosphates	2518	2746	19-31	478-781	522-851
Sum				**7897-14234**	**2015-2641**

Source: (IGEME, 2004; WKO, 2004)

4.1.3.3 Balanced Systems

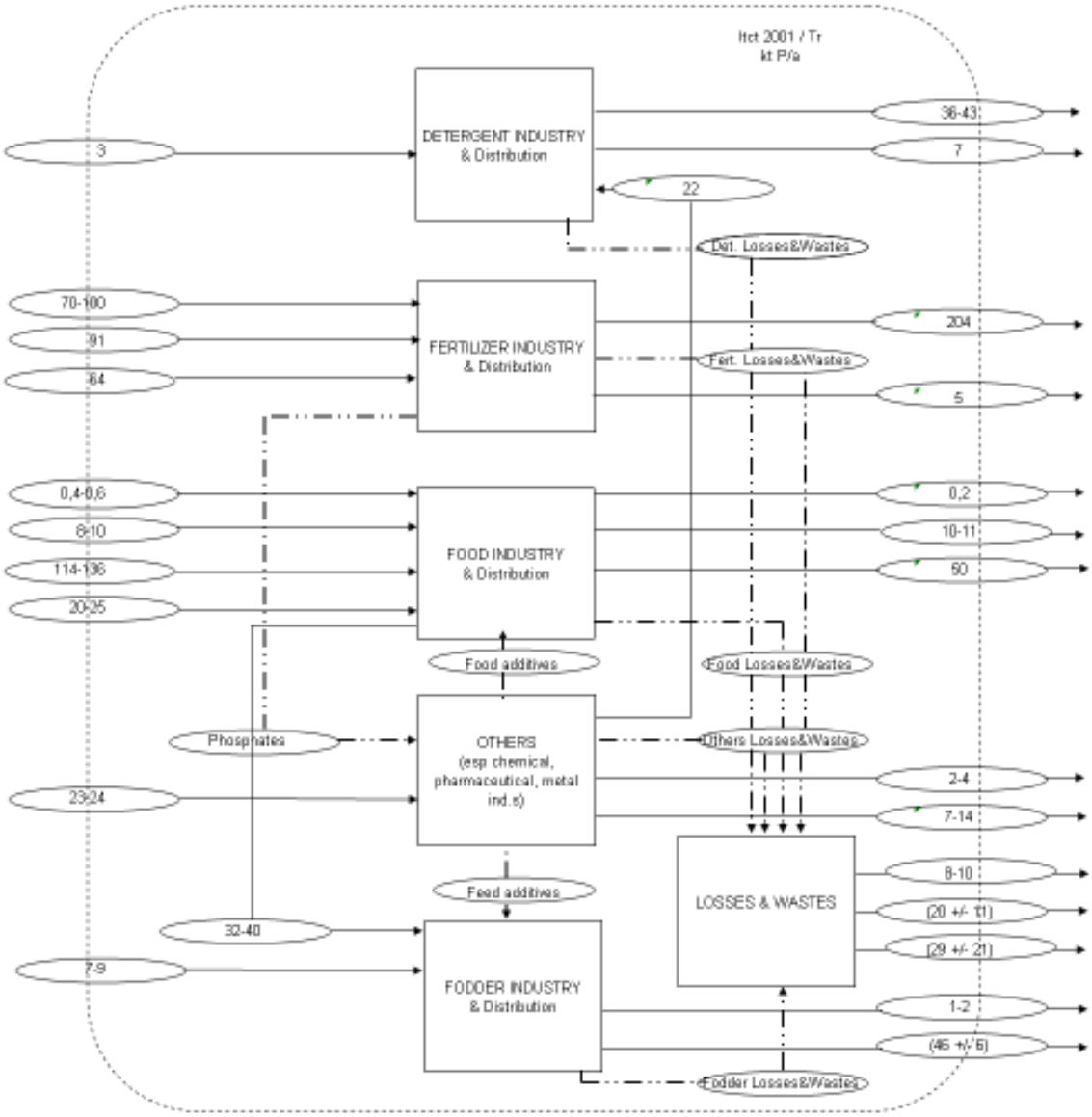

Figure 4.13.a. P-flows through the ITCT, Turkey, 2001

In these system pictures, as well as in Figure 4.14.a and b, the balance of imports and exports give the so called “losses and wastes”, (29 +/- 21) in Turkey, and (6.6 +/- 6.9) in Austria. This highly uncertain flow does not involve the municipal portion of wastes and wastewaters. The P in the municipal ITCT wastewater (see Section wastewater management) and the calculated P-amount of the municipal ITCT waste (see Section waste management) are estimated separately. Apart from the exports, all flows leaving the system are quantified each time on the side of the destination processes (like fodder consumption in section agriculture, food & others consumption in ‘household’, municipal wastewaters in ‘waste management’,). That means that the waste flows here also include losses and wastes of the distribution.

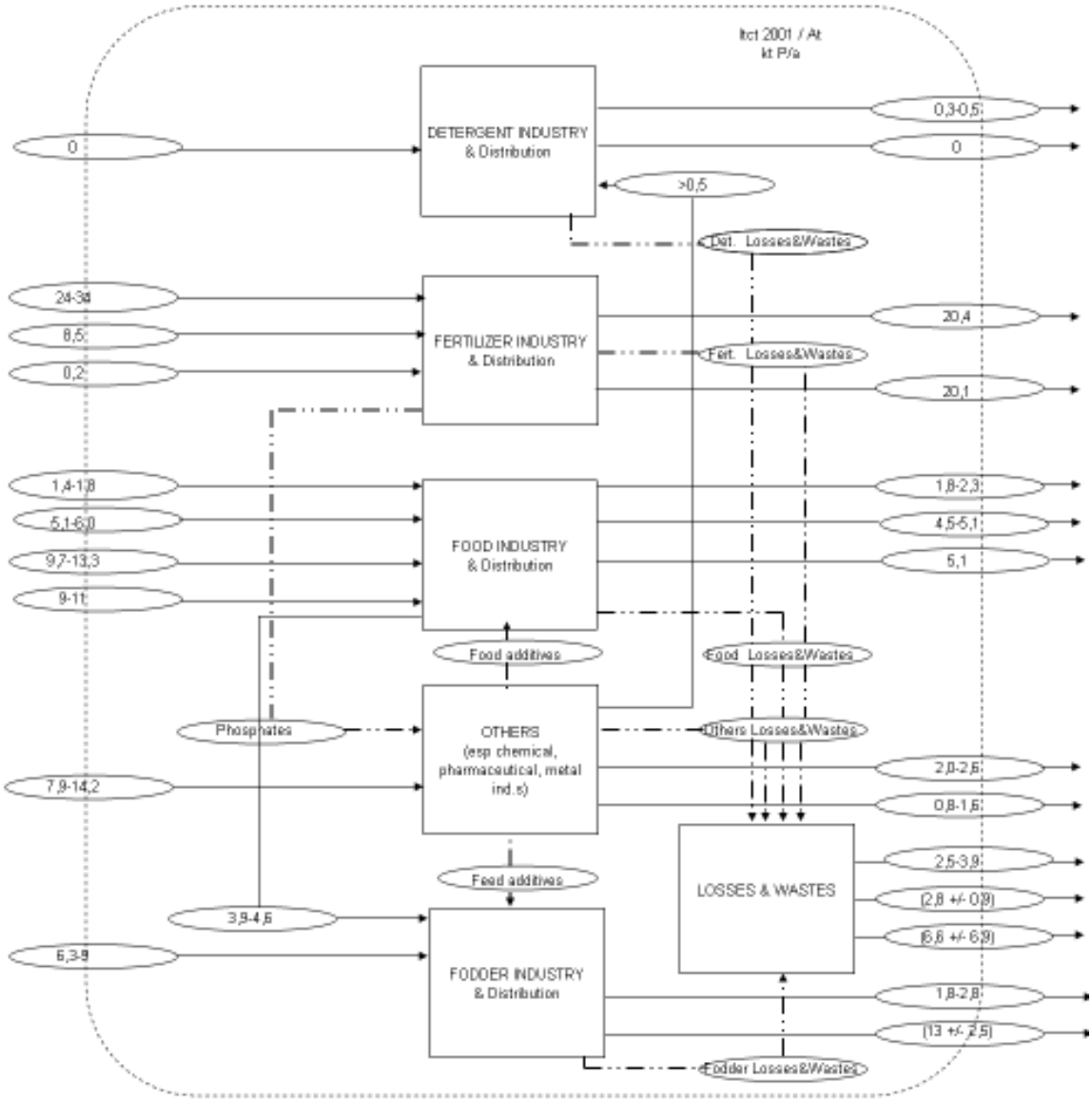

Figure 4.13.b. P-flows through the ITCT, Austria, 2001

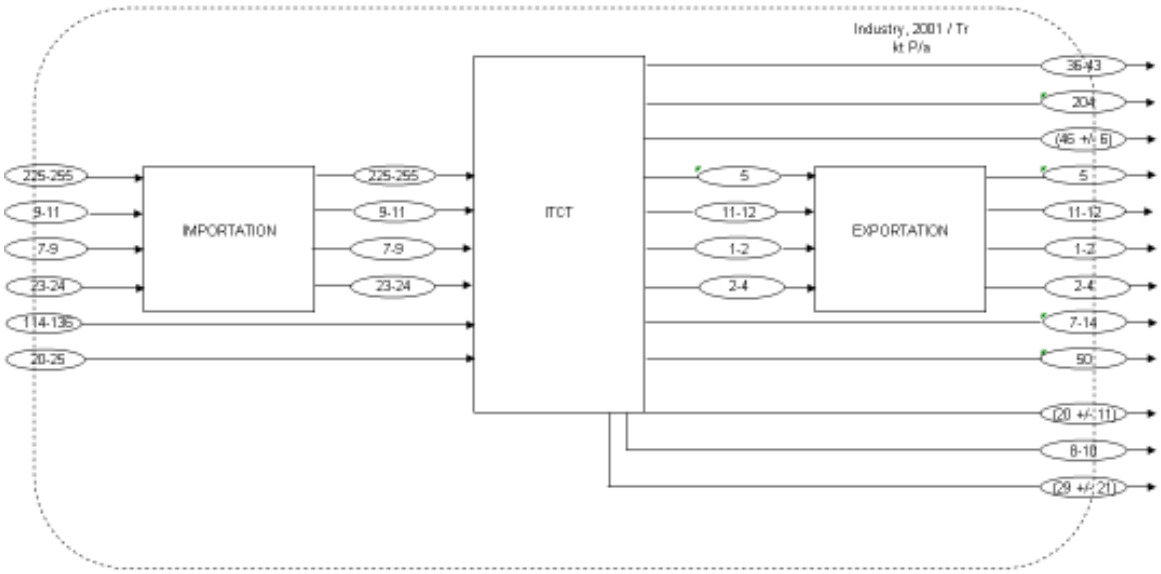

Figure 4.14.a. P-balance in industry, Turkey, 2001

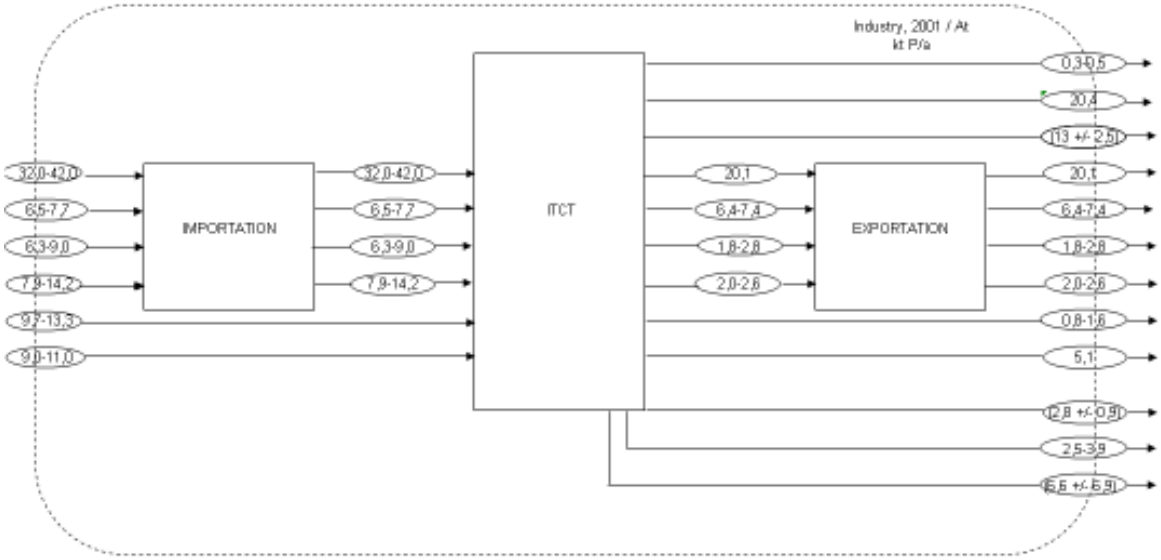

Figure 4.14.b. P-balance in industry, Austria, 2001

4.1.4 Household

Process household is the process, where the individuals directly influence P-flows through their choices and consumption habits. Generally, the most important P-flows are those induced by detergent and food input, and the output of wastewater.

4.1.4.1 System Definition for the Subsystem Household

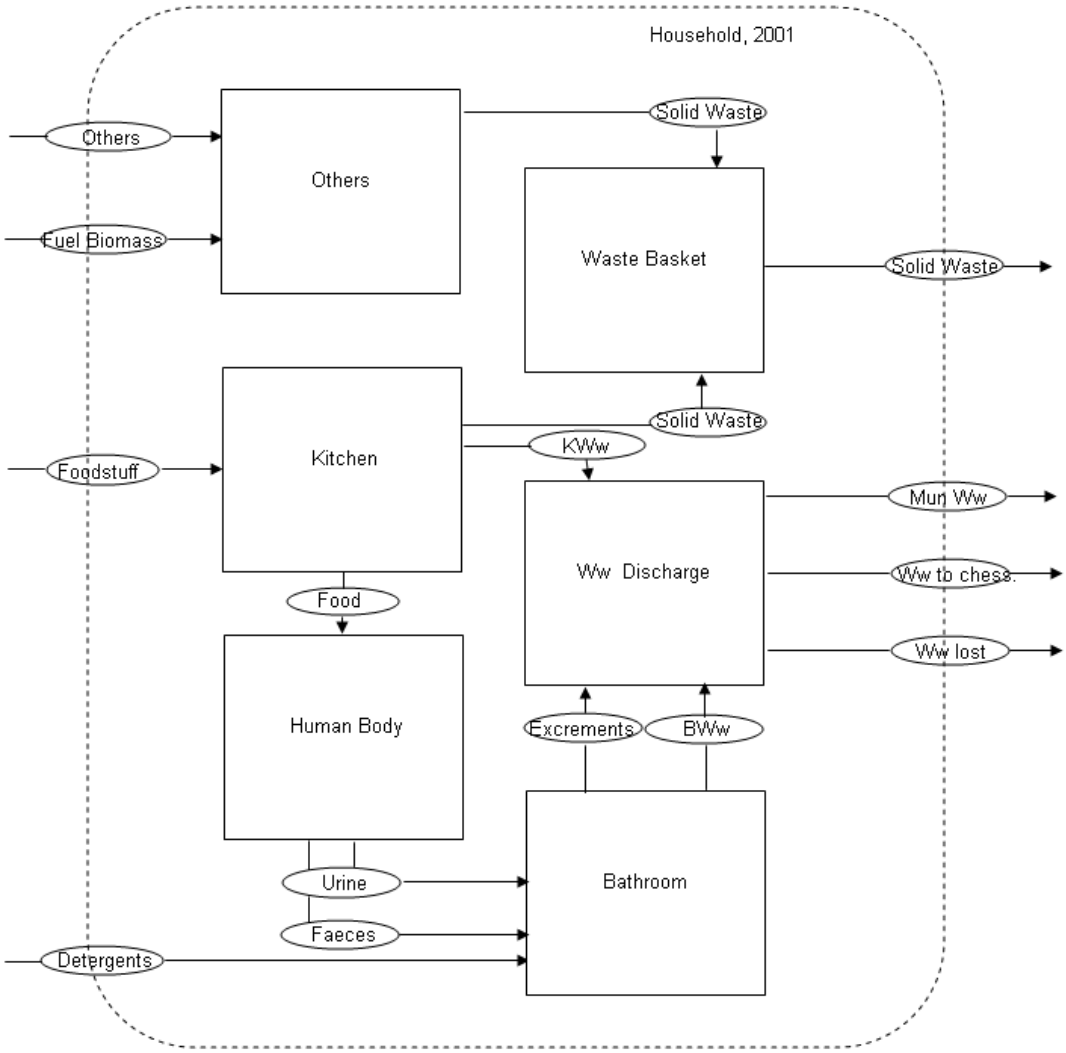

Figure 4.15. The Material Flow Analysis for the subsystem household

Ww: Wastewater
BWw: Bathroom wastewater
KWw: Kitchen wastewater
Greywater = BWw + KWw

4.1.4.2 Balancing

Foodstuff makes up the most important P-inflow to the household. The dietary habits are important to know in balancing the household. Data with different character will be presented here for the two countries and they need to be differentiated to clarify their content. The food consumption values, as shown in the below table, are taken from the counties' "food balance sheets" (FAO, 2004), they represent the per capita supply in 2001, and are multiplied by the population values.

Table 4.17. Foodstuff available for consumption in Tr and At, and the associated P-flow

	Food Consumption kg/cap/a		P-conc. g/kg P		Average Food-P Consumption g P/cap/a		Food-P Consumption t P/a	
	Tr	At	min	max	Tr	At	Tr	At
Cereals –Ex.Beer	224	117	2.5	3	617	322	38860-46632	2370-2844
Potatoes	58	63	0.4	0.5	26	28	1598-1998	205-256
Sugar &Sweeten.	29	45	0.1	0.1	3	5	199-199	37-37
Pulses	12	1	3.5	4	43	3	2793-3192	25-28
Treenuts	5	6	3.5	4	20	23	1274-1456	175-200
Oilcrops	4	4	6	8	27	28	1632-2176	192-256
Vegetable Oils	18	19	0	0.1	1	1	0-126	0-15
Vegetables	223	93	0.4	0.4	89	37	6192-6192	300-300
Fruits – Ex.Wine	99	129	0.2	0.2	20	26	1371-1371	209-209
Stimulants	3	10	3	4	9	35	537-716	243-324
Alcoh. Beverages	12	148	0.1	0.15	2	18	85-128	120-180
Meat	19	110	1.8	2.2	37	219	2333-2851	1598-1954
Offals, Edible	1	1	2.5	3	3	2	175-210	18-21
Animal Fats	2	18	0	0.2	0	2	0-23	0-29
Milk – Excl.Butter	112	290	0.9	1.2	117	304	6963-9284	2113-2818
Eggs	7	13	1.9	2.1	13	25	866-958	194-214
Fish, Seafood	8	15	2	2.5	17	33	1026-1283	238-298
Sum animal pr.	**149**	**447**					11364-14609	4161-5333
Sum total	**836**	**1082**			**1044**	**1111**	**65904-78793**	**8036-9982**
Animal Pr./Total	**0.18**	**0.41**					**0.17-0.19**	**0.52-0.53**

Amounts: (FAO, 2004)
Concentrations: (Beaton et al., 1995), see Process Agriculture

Data on the food supply for consumption that were shown above (which already exclude by-products, fodders and manufactory waste) are taken from FAO databases. They do not represent the real consumption. Figure 4.16 demonstrates the many ways one can find the "food consumption data", all of which in fact refer to different goods shown on this figure.

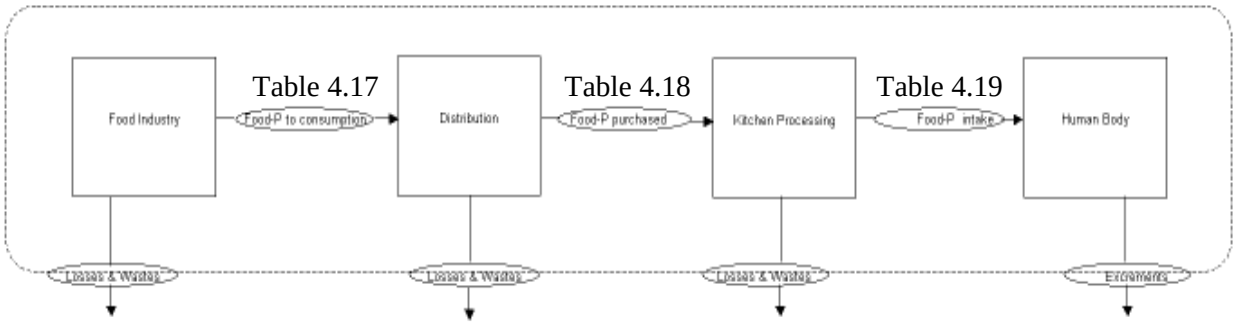

Figure 4.16. Flows of goods, on which dietary information can be found, or estimated.

Food P-consumption calculated in Table 4.17 represents the same flow of goods for both countries, namely, the output from industry and the input to distribution. Tables 4.18 and 4.19 on the other hand calculate different flows for both countries. In case of Turkey, data was available as household consumption surveys (Table 4.18), i.e. the purchased food in Figure 4.16. Some estimates here are not recent values; household surveys are conducted seldomly due to their high costs. On the other hand, diet is closely related to the culture and habits and would not change much in short periods of time. The values given are averages of different household consumption surveys. For Austria, it was possible to reach "food intake" values (Table 4.19), calculated from food balance sheets with corrections factors (Payer et al., 2000). Such values take into account losses such as spoilage, processing in the kitchen, scraping, leftovers, pet feeding, etc. The values are collected from different sources and converted to kg/cap/a in most cases. They depict the differences in the diets of both countries.

According to the model put forward by (Baccini and Brunner, 1991) the transfer coefficient between the 'food-P taken in' and the food-P purchased is 0,86 (Figure 4.17). Based on this, in case of Turkey the P-intake and in case of Austria the P in purchased food can be estimated. Before that, food purchased in Turkey will be increased by 10 % to add the out of home eating. In case of Austria, the intake data includes this information.

Table 4.18. Purchased foodstuff in households for Turkey and the associated P-flow

	Purchased food kg/cap/a	P-concentration g/kg P		g P/cap/a	Food-P t P/a
Cereal products	165	2.7	2.7	446	30887
Dry pulses	10	3.7	3.7	37	2565
Milk	9	1	1	9	624
Cheese	9	2	6	18	1248
Butter	2	0.2	0.2	0	28
Yoghurt	20	1.4	1.4	28	1941
Red Meat	11	2	2	22	1525
Chicken	3	2	2	6	416
Fish	3	2.5	2.5	8	520
Egg	6	2	2	12	832
Fresh vegetables	109	0.4	0.4	44	3023
Fresh fruits	69	0.1	0.1	7	478
Oils	9	0	0	0	0
Rice	8	1	1	8	555
Potatoes	12	0.4	0.4	5	333
Sugar, confectionary	14	0	0	0	0
Sum animal prod.	63			103	7134
Sum total	**459**			**649**	**44975**
Animal Pr./Total	0.14			0.16	0.16

Amounts: (Tönük et al., 1984), (Köksal, 1974), (Ungan S, 1998)

Table 4.19. Intake of foodstuff for Austria and the associated P-flow

	Food intake kg/cap/a	P-concentration g/kg P		g P/cap/a	Food-P t P/a
Cereal products	64	2.7	2.7	173	1394
Milk	84	1	1	84	677
Cheese	13	2	6	78	629
Butter	3	0.2	0.2	1	5
Cream	6	0.6	0.6	4	29
Red Meat	42	2	2	84	677
Chicken	8	2	2	16	129
Fish	5	2.5	2.5	13	101
Egg	12	2	2	24	194
Fresh vegetables	80	0.4	0.4	32	258
Fresh fruits	51	0.1	0.1	5	41
Oils	6	0	0	0	0
Rice	4	1	1	4	32
Potatoes	50	0.4	0.4	20	161
Sugar, confectionary	35	0	0	0	0
Alcohol (beer)	104	0.1	0.1	10	84
Sum animal prod.	173			303	2441
Sum total	**567**			**547**	**4412**
Animal Pr./Total	0.31			0.55	0.55

Amounts: (Payer et al., 2000)

As shown in the table, around 45 kt of P is purchased in Turkey in households and around 4.5 kt P is taken in, in Austria through foodstuff. Since the value for Austria already excludes the kitchen processing and leftovers, reflecting the bodily intake value (Payer et al., 2000), this value should be divided by 0,86. This yields the amount entering the household to be **5130 t**. For Turkey, including the 'out of home eating' gives **50 kt**. The consumption values from food balance sheet, on the other hand, are 66-79 kt for Turkey, and 8-10 kt for Austria (Table 4.17). The difference includes losses in distribution (which is less in Turkey, as a high agricultural population is supplying itself), as well as the touristic consumption. The intake value for the Turkish population - again using the TC of 0.86- equals to 43 kt.

Looking at the above calculations, the Turkish population does not lack phosphorus in their daily intake. As stated in a nutrition report on Turkey, people are consuming enough proteins, yet these are mostly plant-based proteins. The animal-based proteins are not consumed enough, which is also reflected in the insufficient consumption of milk and milk products.

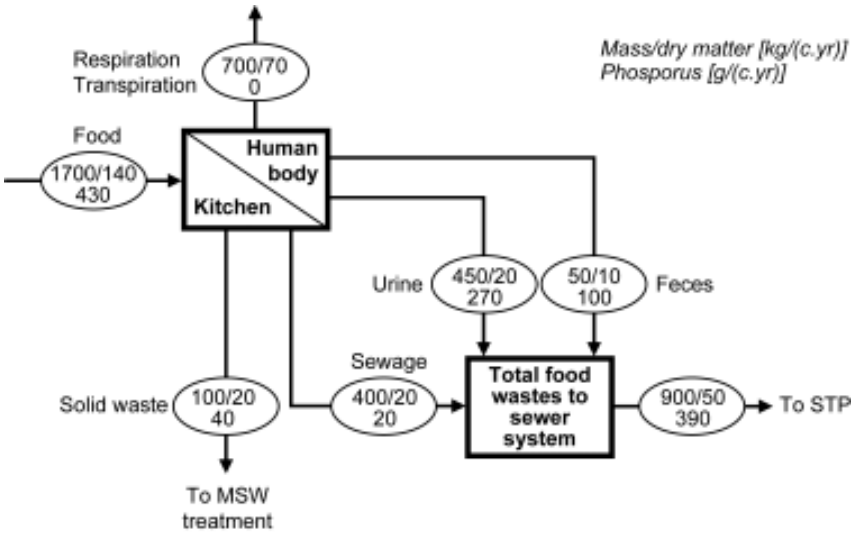

Figure 4.17. Flow of food, food dry matter and phosphorus contained in food through private household. (From Baccini, P. and Brunner, P.H., Metabolism of the Anthroposphere, Springer, New York, 1991. With permission.)

According to (Zessner et al., 1997) the flow "others" into households could cause a P-flow of 0,1-0,2 kg/cap.a (0,8-1,6 kt At; 7-14 kt Tr). Detergent consumption, on the other hand, as calculated in the 'detergent industry' section of the process industry contribute 36-43 kt and 0,3-0,5 kt P to the household input in Turkey and in Austria respectively. Fuel biomass was

calculated in system agriculture to be (48 +/- 3) kt P/a in Turkey. Table 4.20 summarises all the inputs and outputs.

The distribution of the food-P entering the household will be estimated based on the model given by Baccini and Brunner as shown in Figure 4.17 (Baccini and Brunner, 1991). In their model, the food-P entering the households is assumed to be transferred to the wastewater by 90 % and solid waste by 10 %. In the system, shown in Figure 4.15, there are other input flows as well; 'Detergents', and 'others' involving the P in other goods, like fuel, both sourcing from industry. The third flow, "fuel biomass" refers to the manure-based energy carrier sourcing from agriculture, which are used for heating and cooking in households. The ashes are usually not used but simply disposed of in the villages. All the P in detergents will be assumed to end up in the wastewater and the P in 'others' and in 'fuel biomass' in the solid waste.

The below table shows that around 85 kt P in Turkey and 5 kt P in Austria are discharged with wastewaters from the household. Considering the 59% and 86% connection rates to the sewer system in Turkey and in Austria (see Section Wastewater management), portions of wastewater discharged to the sewer system and the cesspit can be calculated. Around 50 kt and 4.7 kt P should go to the sewer system, 35 kt and 0.8 kt to the process cesspit (Section 4.1.5 "Wastewater management") in Turkey and Austria respectively. However, results of the wastewater management system for Turkey show, that the amount of wastewater-P being collected and managed is much less (based on the statistics). Iteration between the sections leads to defining a loss of wastewater sourcing from households- the generated but not collected amount. From the 85 kt P produced in households around (45 +/- 2) will be assumed to get lost before entering the wastewater management system.

The daily per capita load in wastewater calculated using these values give 1.7-2 g/cap.day for Austria, which is the same with the value in the literature (Zessner et al., 1997), (see also "Wastewater management"). However, in case of Turkey, the daily load leading to 85 kt of P annually is much higher, namely 3.2-3.5 g/cap.day. That such a daily load of P can be possible is shown by the example of Germany (Cornel, 2002): The per capita P-load in 1970`s has been 4.9 g/cap.day, in 1990`s 2.5 g/cap.day, which is today 1.6-2 g/cap.day.

Table 4.20. Phosphorus inputs and their partitioning into outputs through the household, 2001

	Input		Partitioning, kt P							
	kt/a P		Urine		Faeces		Greywater*		Solid Waste	
Goods	Tr	At	Tr	At	Tr	At	Tr	At	Tr	At
Food	50	5.1	31.5	3.2	11.5	1.2	2	0.2	5	0.5
Fuel biomass	(48 +/- 3)	0							(48 +/- 3)	0
Detergents	36-43	0.3-0.5	-	-	-	-	(40 +/- 2)	(0.4 +/- 0.1)	-	-
Others	7-14	0.8-1.6	-	-	-	-	-	-	(11 +/- 2)	(1.2 +/- 0.2)
Sum	**(149 +/- 4)**	**(6.7 +/- 0.2)**	**31.5**	**3.2**	**11.5**	**1.2**	**(42 +/- 2)**	**(0.6 +/- 0.1)**	**(64 +/- 4)**	**(1.7 +/- 0.2)**

Greywater = BWw + KWw

4.1.4.3 Balanced Systems

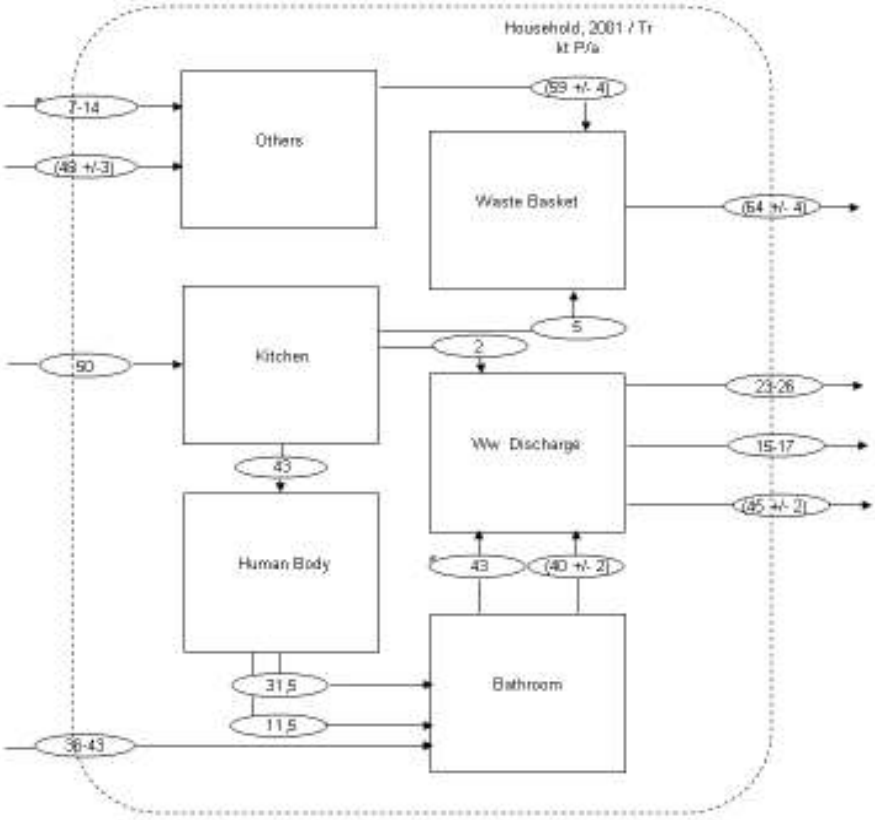

Figure 4.18.a. P-budget in household, Turkey, 2001

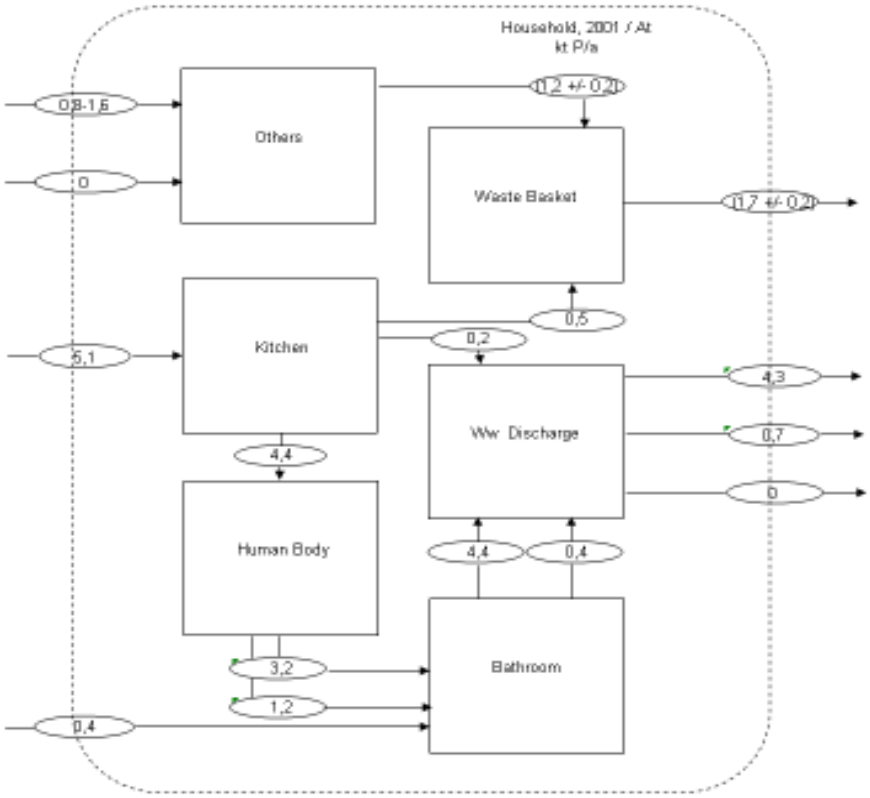

Figure 4.18.b. P-budget in household, Austria, 2001

4.1.5 Wastewater Management

Wastewater management is the part on which most P-recovery and recycling discussions are being made, based on the arguments of scarcity, reuse and sustainability. Balancing this subsystem helps seeing to what extent these claims are justified. Wastewater and its management influence the water quality directly. Thus, 'phosphorus management' has been the name given to the protection of water bodies from the overload of phosphorus emissions. In wastewaters, mostly the excrements and the phosphates in detergents cause phosphorus emissions. The largest part of phosphorus in the wastewater has the soluble inorganic form.

4.1.5.1 System Definition for the Subsystem Wastewater Management

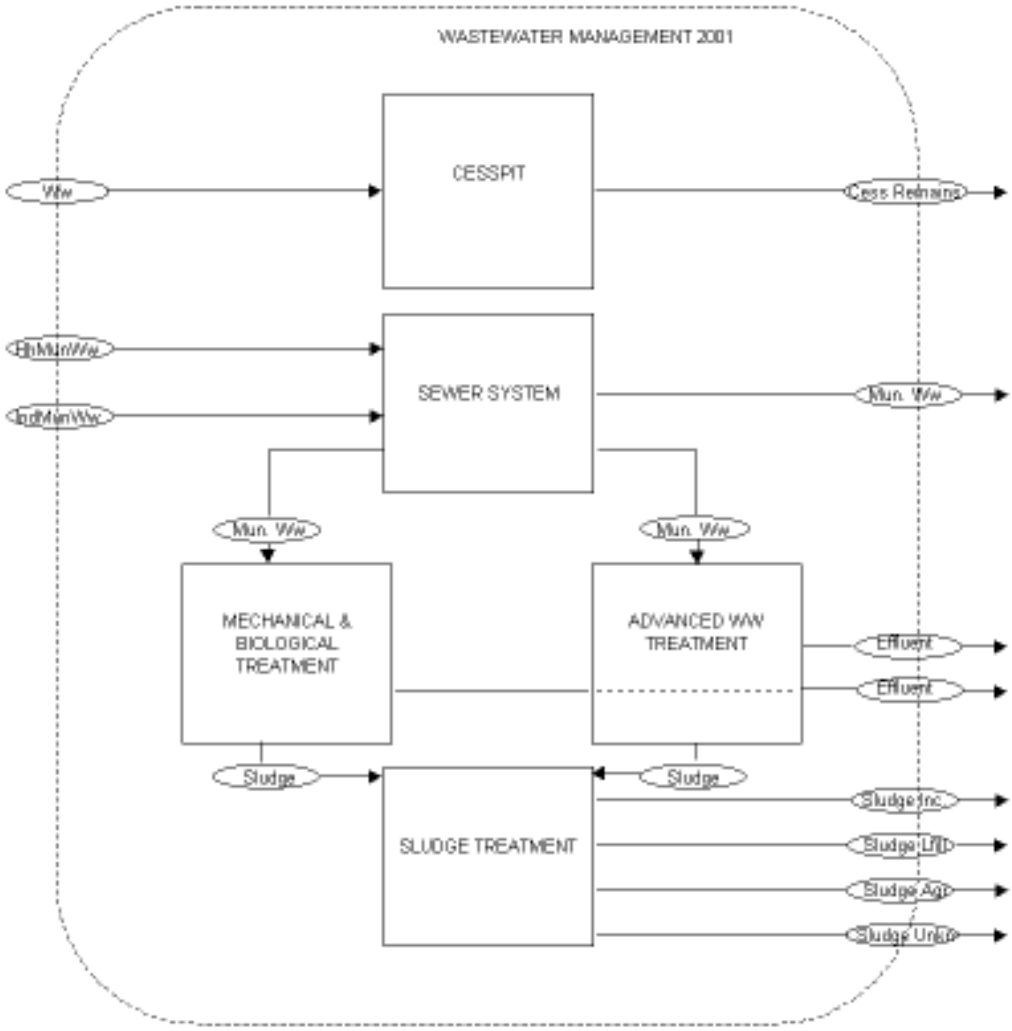

Figure 4.19. The Material Flow Analysis for the subsystem 'wastewater management'

4.1.5.2 Balancing

A- Status of Wastewater Treatment in Austria and Turkey

In Turkey, in 2001, 75.3% of the population in municipalities was served by a wastewater network (55-60 % of the whole). 2.73 billion m^3 wastewater was released from different sources to the network and approximately 44 % of it was treated before being discharged (SIS, 2004). In Austria, 1068 billion m^3 municipal wastewater was generated in 2001, and 86 % of population was connected to the sewer system. In 2001, for the first time, practically all of the wastewater entering the sewer is being treated before being discharged (BMLFUW, 2002a).

As the law limits the phosphate content of detergents in Austria, phosphorus load and the concentration of P in the wastewater is reduced recently. Therefore, the threat to the water bodies by the phosphorus in wastewater is reduced to a large extent. At the moment, 86 % of the population is connected to the sewer and approximately 90% of this centrally collected amount undergo phosphorus elimination (BMLFUW, 2002a). Usually, chemical precipitation and the removal of the precipitated sludge from the wastewater are used for the advanced treatment of phosphorus (chemical P-treatment). In Turkey, advanced treatment is not an established practice so far. Treatment plants operating this process are located only in Istanbul and Izmir. The discharges of phosphorus emissions into many rivers and seas are being monitored to a limited extent. Table 4.21 shows a comparison of the average P-concentrations in the wastewater of some European countries (Pons et al., 2004) taken from a wastewater characterisation survey of EWA. They are taken from 90 treatment plants in Austria (with a median value 7 mg/l P), and 8 treatment plants in Turkey (no median given). Not listed in the below table, Norway (12 treatment plants) has the lowest value of 3 mg/l P, having a standard deviation 1.1. All these numbers do not have much meaning so long as the type of the sewer system is not mentioned. It is, for example, important to mention, that the sewer system in Turkey is separate (rainwater), and the one in Austria is not.

Table 4.21. Average concentrations in the wastewater of some European countries

Countries	Austria	Germany	Switzerland	Turkey	Spain
Mg/l P	**7,1**	**8**	**4**	**12**	**11**

B- Phosphorus Flows in the Wastewater Management

Sewer System

In this part, phosphorus flows entering the sewer system and their sources will be determined. Municipal wastewaters are mainly the domestic wastewaters from households and ITCT and the industrial wastewaters which are pre-treated to have a domestic character and permitted to be discharged into the sewer system. Table 4.22 calculates the watewater generation, associated phosphorus, the collected amounts and their sources, based on data from: (BMLFUW, 2002a; Esen, 2002; Glennie E.B. et al., 2002; Pons et al., 2004; SIS, 2003; Tasli et al., 1999; Zessner et al., 1997).

Table 4.22. Generated and collected amounts of wastewater-P from domestic sources

		Tr min	Tr max	At min	At max
1. P-loads from households					
Specific P-load *	g P/(cap*d)	1.5	1.7	1.7	2.0
Population 2001	cap	69331216	69331216	8065465	8065465
Wastewater-P from households	**t P/a**	**37959**	**43020**	**5005**	**5888**
% connected to sewer		59	59	86	86
Sewer-P from households	**t P/a**	**22495**	**25494**	**4304**	**5063**
Cesspit-P from households	t P/a	15464	17526	701	824
2. Wastewater discharged into the sewer system					
TOTAL Wastewater discharged	Mio m^3/a	2727	2727	996	996
Specific water use in households	l/cap/day	110	110	150	150
Population connected to the sewer		41086441	41086441	6936300	6936300
Wastewater from households	Mio m^3/a	1650	1650	380	380
Wastewater from ITCT	Mio m^3/a	1077	1077	616	616
3. P-loads from industry and total P-loads					
Average concentration in the sewer	mg/l	11.0	13.0	6.8	9.0
TOTAL Sewer-P	**t P/a**	**29997**	**35451**	**6773**	**8964**
Sewer-P from ITCT	**t P/a**	**7502**	**9957**	**2469**	**3901**
4. P concentrations according to sources					
of the household ww	mg/l	13.6	15.5	11.3	13.3
of the ITCT ww	mg/l	7.0	9.2	4.0	6.3

* for Turkey: iterated (hypothetical) load to harmonise with the wastewater statistics. A more realistic load was calculated in section household to be 3.9 g P/(cap*d). The difference is lost to the environment.

In the first part of the table phosphorus loads per capita are used to calculate the wastewater-P, which is generated in private households. For Turkey, the load in this table is different than the one calculated in section Household, which is discussed later in this section. Then, the amount of produced wastewater-P is divided into sewer-P and cesspit-P, according to the percent population connected to the sewer system. The State Institute for Statistics (SIS,

2003), provides statistics based on the polls filled by municipalities, which claim, that 75 % of the municipal population was connected to a sewer system in 2001 corresponding to 59% of the overall population.

In the second part of the Table, the total amount of the wastewater discharged into the sewer system (taken from statistics, (BMLFUW, 2002a; SIS, 2003), is divided into the wastewater from households and ITCT. Daily average water consumption in households is used for this purpose (BMLFUW, 2002b; Esen, 2002). The State Institute of Statistics gives in their Manufacturing Industry Waste Inventory of 1996 (SIS, 2000), the amount of wastewater from the manufacturing industry discharged to be around 1000 mio m^3/a. Yet, only 25% of this amount enters the sewer system, i.e., around 250 mio m^3 of the whole 1077 mio m^3 calculated here as ITCT wastewater comes from the manufacturing industry (Table 4.22).

The third part calculates the phosphorus load coming from the ITCT, and eventually the total phosphorus load in the sewer from both sources (total Sewer-P): For Turkey, the discharge limit for industrial wastewaters into the sewer is given as 10 mg/l in the Water Pollution Control Regulation of 1988. There are not many studies on the municipal wastewater characterisation in Turkey yet. However, reported in (Tasli et al., 1999), the phosphorus concentration in a few districts of Marmara Region varied between 8 and 11 mg/l. Taking also Table 4.21 into account, it can be concluded, that the average concentration in the sewer could be at most 11-13 mg/l. Multiplied by the given total volume of wastewater, which enters the channel, the total municipal wastewater P in the sewer should be 30-35 kt. Together with the amount heading the process cesspit, 38-43 kt P leave the households and enter the wastewater management system. On the other hand, in section “household” the amount generated in households was calculated to be around 85 kt P. This multiplied with the connection rate gives 50 kt P entering the sewer. If all of this 50 kt entering the sewer would go into the wastewater management, then the average concentration in the channel would be 18 mg/l, assuming even all 2727 mio m^3 wastewater comes from the household, and industry discharges zero. This is of course not the case. That means, that the whole wastewater produced does not enter the wastewater management system. In the Table 4.22, only 1.5-1.7 g/cap.d P-load coming from household gives a reasonable concentration range after iterations based on the reported 2727 mio m^3 wastewater entering the channel. So, this part calculates first the whole P load in the channel assuming 2727 mio m^3 wastewater and 11-13 mg/l P, then, subtracting the line “Sewer-P from households” from this gives the “Sewer-P from

industry". Again it should be noted, that in case of Turkey, this reasoning only works with much lower per capita P-loads than it was estimated before. That means, from the 85 kt of P leaving the household, 38-43 kt P enters the wastewater management system, which is constructed with the available statistical data. Three explanations are possible: 1. The output from the household is overestimated in section "household": It is for sure that per capita P load is more than 2 grams, based on dietary intake and detergent use. Thus, this is a rather low possibility. 2. Statistics for connection rate to the channel and the total wastewater discharged are considerably wrong: Taking a lower connection rate or more wastewater discharge makes also sense, while iterating on the table 3. The whole amount leaving the household to enter the sewer system (and so the wastewater management system in this study) does not enter these and get partly lost in between, in various environmental compartments.

Rather than taking the whole wastewater-P of 85 kt (the household output) as the input to the wastewater management and distributing it to the processes therein, a loss between household and the wastewater management is defined in case of Turkey. Not the household output, but the input estimated here enters the wastewater management system, and the difference is lost to the environment (45 +/- 2). For Austria, the estimations for wastewater-P from both sides match anyway.

Cesspit (senkgrube, fosseptik):

The French word 'fosseptik' is being used in Turkey for the closed pit or cesspit, 'Senkgrube' in Austria. It is a reasonable solution for the rural settlements, where the wastewater flows are not enough to support the sound functioning of a sewer system. In Austria, the population, which is not connected to the sewer system (14 %) relies on a cesspit for sanitary purposes according to statistics (BMLFUW, 2002a). In Turkey, on the other hand, 97 % of the urban and 70 % of the rural population have access to "improved sanitation", which involves both flushing into the sewer and cesspit (WHO/UNICEF, 2001). Overall it makes around 88 % of the population. Open pit seems to be still in use, 20-30 % in rural areas, 1-3 % in urban areas, around 20 % on average. In 300 small villages sewerage systems have been built, most of which have operational problems (Tuna and Kinaci, 1999).

According to the above data, it can roughly be said that about 60 % of the population in Turkey have access to the sewage system, 20 % use septic tanks and again around 20 % rely

on open pits. For the sake of simplicity in the MFA, open pits are considered within the process ‘cesspit’ (together with septic tanks) in our system.

The amount of P entering the process ‘cesspit’ from households has already been calculated inTable 4.22. In case of Turkey, 15-17 kt P enters this process, which difficult to track. The remainings of cesspits (15-17 kt in Tr and 0,7-0,8 kt in At) are assumed to enter the process environment.

Municipal Wastewater Treatment

The amount of phosphorus entering the sewer system is already calculated above (see ‘Sewer System’). Wastewater is then either with/without a pretreatment, directly (Turkey: especially deep sea outfalls), or after wastewater treatment discharged (At and Tr). Table 4.23 calculates the municipal watewater treatment based on data from (BMLFUW, 2002a) and (SIS, 2003). There are again assumptions made, like the average treatment efficiencies, and like assuming all of the P removed from wastewater to end up in the sewage sludge.

Table 4.23. P-Flows in Municipal Wastewater Treatment

		TRmin	TRmax	ATmin	ATmax
1. Status of Ww treatment					
TOTAL Sewer-P	t P/a	29997	35451	6773	8964
% Ww treated		44	44	100	100
% Physical Treatment*		17	17	<1	<1
% Biological Treatment		22	22	10	10
% Advanced Treatment		5	5	90	90
2. P-loads entering ww treatment					
to mechanical&biological treatment	t P/a	11698	13826	677	896
to advanced treatment	t P/a	1500	1773	6096	8068
P-load untreated		16800	19900	0	0
3. Treatment efficiencies					
Mechanical&biological treatment**	%	25	25	35	35
Advanced treatment**	%	85	85	85	85
4. Effluent from ww treatment					
Mechanical&biological treatment	t P/a	8774	10370	440	582
Advanced treatment	t P/a	225	266	914	1210
5. P concentrated in sludge					
Mechanical&biological treatment	t P/a	2925	3457	237	314
Advanced treatment	t P/a	1275	1507	5182	6858

* neglected in case of At, deepsea outfall included in case of Tr

** estimated (mechanical (physical) treatment relatively more common in Tr than in At)

Industrial Wastewater Treatment

'Industrial wastewater', which is not municipal, is one of the most difficult flows to estimate. It covers mainly wastewater coming from manufacturing industries. In Turkey, the last inventory on manufacturing industry wastes comes from the year 1996 (SIS, 2000). Here, it is possible to find the produced amounts of wastewaters according to their sectors, given in two-digit SIC codes together with their treatment levels and receiving bodies. The amount mentioned is around 750 mio m^3 overall (excluding the 250 m^3 entering the sewer system, treated in 'municipal wastewater treatment' above). Being an important inventory on its own, the 2-digit level of SIC classification and the wastewater amounts reported do not help much to estimate the P-flow in this part. It has not been possible to determine, even roughly and generally, the phosphorus concentration ranges for the manufactury sectors classified. US EPA and The European IPPC Bureau (http://eippcb.jrc.es/pages/FActivities.htm) offer industrial wastewater characterisation studies on a sectoral basis, which were not enough to determine phosphorus contents of these wastewater categories either. In conclusion, there is a big information gap on the characteristics of sectoral industrial wastewaters concerning phosphorus. Determining the amount of P in industrial wastewater will be left to the system ITCT, and covered in the flow 'wastes and losses'.

Sludge Treatment

Sludge treatment processes are mainly dewatering (up to 30% DM) and to a less extent also stabilisation in both countries. In Austria, in 2001, half of the P-flow through sludges ended up in landfills, 30 % after incineration, and 20 % directly. 20 % of the sludge, and hence the sludge P, was reused in agriculture (which is no more possible), and around 30 % went to 'other reuses', like processing, landscaping and additive to construction material, and partly to intermediate storage (BMLFUW, 2002a). In Turkey, on the other hand, only in Ankara (319 t/d) sludge is being utilised in agriculture after stabilisation, the rest goes to landfilling after a dewatering process (Ministry of Foretsry and Environment, personal inquiry). There might be some inappropriate, intermediate storages.

Table 4.24. The Fate of Sludge-P with the output goods of 'Sludge Treatment' in 2001, t P/a

	P in sludge	Incineration	Landfill	Agricultural use	**Others**
Turkey	4200-5000	-	3600-4000	600-1000*	-
Austria	**5400-7200**	**1600-2100**	**1100-1500**	**1100-1500**	**1600-2100**

* estimation

4.1.5.3 Balanced Systems

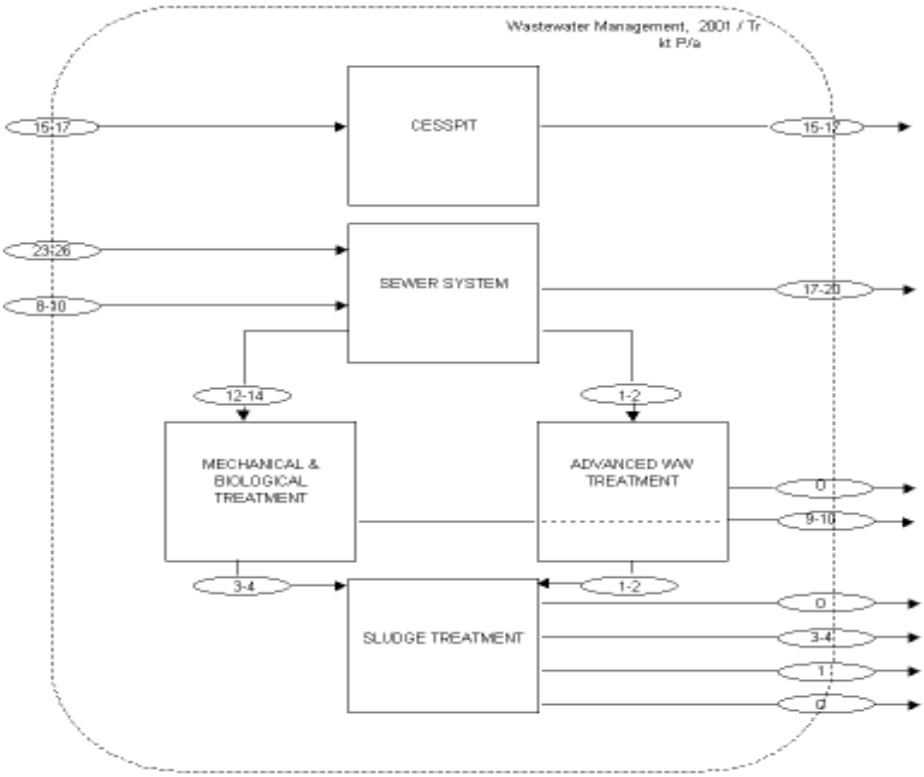

Figure 4.20.a. P-balance in wastewater management, Turkey, 2001

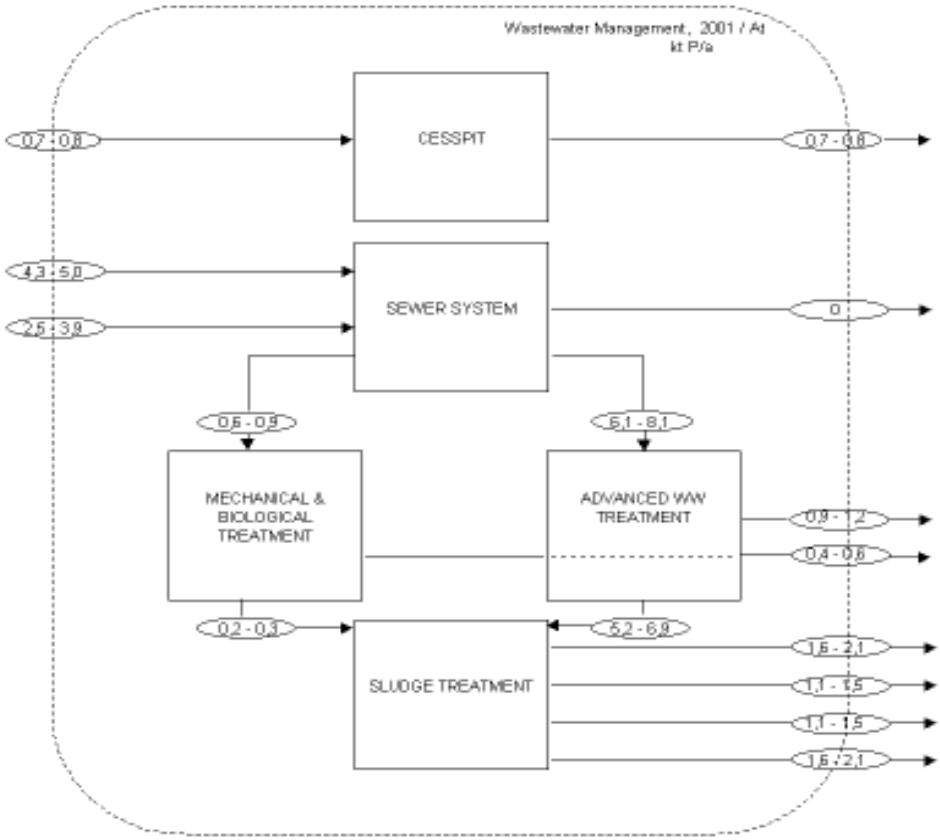

Figure 4.20.b. P-balance in wastewater management, Austria, 2001

4.1.6 Waste Management

Waste management is that part of the system, where the P-resource practically comes to an end on its path through the region regarding the time limits of the MFA. It is at the very back-end. The differences in waste statistics restrict the choice in system definition. Thus, the system construction here depends considerably on the data availability.

In Austria, the Federal Waste Management Plan is used as the main reference for the waste flows (Lebensministerium, 2001), in Turkey, the SIS (SIS, 2004) data is used. Municipal solid wastes and the sewage sludge is taken into account. Only the municipal portion of ITCT waste enters the waste management system defined here. Other waste flows from ITCT (like manufactury wastes) leave it under the flow "wastes and losses".

4.1.6.1 System Definition for the Subsystem 'Waste Management'

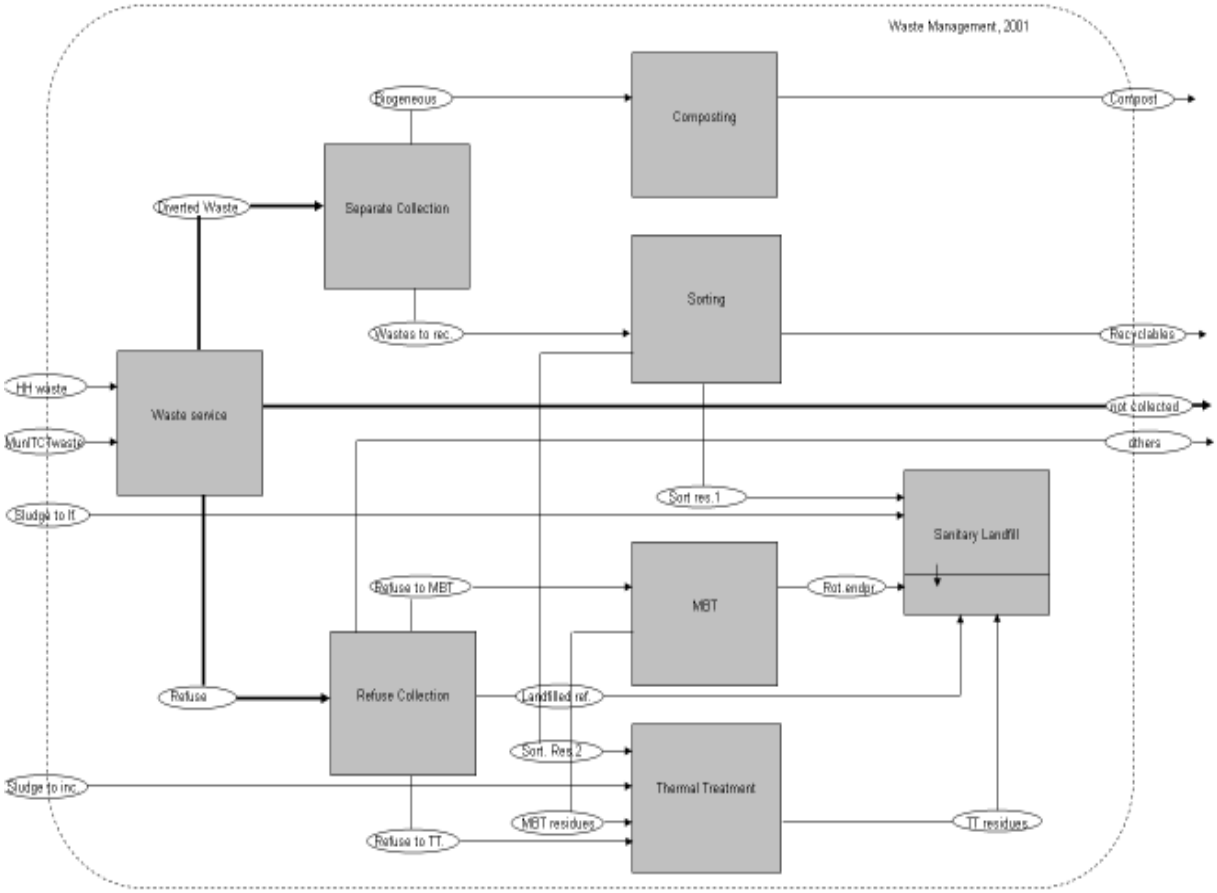

Figure 4.21. The Material Flow Analysis for the subsystem 'waste management'

4.1.6.2 Balancing

A- Status of Waste Treatment in Austria and Turkey

Concerning the waste management practice, Turkey and Austria can hardly be compared in their generation, collection and the treatment of the waste. Austria is experienced and practicing the waste management quite well. Recycling/composting rates more than tripled between 1989 and 1999. A federal ordinance on the separate collection of biowaste came into force in 1995, and the legislation, restricting the organic carbon content of the wastes to be landfilled by 5 %, took effect in January 2004. Austria has already diverted around 50 % of the municipal waste through recycling and composting from landfilling (Seymour, 2004).

In Turkey, the solid waste control regulation dates back to 1991. Since then, the State Institute of Statistics collects data on wastes. In 2004, the packaging waste regulation came to force. Today in Turkey, old practices take place in managing the waste. There is no separate collection of wastes. Sorting of valuable substances is done either from the containers on the street, or in open dumps. These are already in a contaminated state. Open dumps numerous. Only some part of the medical and hazardous wastes are incinerated and not the municipal wastes. The reason is the costs of landfilling and incineration. The responsibility/authority of different institutions, and the ownership on the wastes after thrown away, is not clear. Municipalities are responsible of collecting the waste. The collection and removal of the wastes from cities is the main part of today's waste management. Research on the several aspects of waste management is carried out at universities and other institutes. Yet, the practice lags a lot behind, due to the lack of finance, political will and the public awareness. Open dumping already caused two serious accidents in Istanbul around 1995, killing some people and attracting publicity. Nevertheless, the general wealth, sense of security, as well as public consciousness needs to be increased until wastes will be properly managed.

B- Phosphorus Flows in Waste Management

There are four flows entering the system. Phosphorus in the sewage sludge, which is landfilled directly and after incineration, was already calculated before. Data on the waste flows entering composting, recycling, mechanical-biological treatment (MBT), incineration, landfill and others (in case of Turkey, for example, dumping, burial, open burning) are taken from the ISI and Federal Waste Management Plan (see Figure 4.21 for these flows).

Estimation of the municipal (ITCT) waste from the collected waste

Table 4.25. P contents of the main waste flows, 2001

	Waste flow kt/a		Ref.	% P	P flow kt/a	
	Tr	At			Tr	At
Waste generation	32900	NA	[1]			
Collected waste	25400	3100	[2]			
Not collected waste	**7500**	**0**	**diff.**	0.5-0.7	38-53	0
Biogeneous waste (to composting)	380	550	[2]	0.2-0.5	1-2	1.1-2.8
Wastes to recovery	0	990	[2]	0.01-0.04	0	0.1-0.4
Diverted waste	**380**	**1540**	**sum**		1-2	1.2-3.2
Refuse to MBT	0	194	[2]	0.1-0.2	0	0.2-0.4
Refuse to TT	0	456	[2]	0.1-0.2	0	0.5-0.9
Landfilled refuse	7050	884	[2]	0.1-0.2	7-14	0.9-1.8
Others	17970	0	[2]	0.1-0.2	18-36	0
Refuse	**25020**	**1534**	**sum**		25-50	1.5-3.1
Municipal waste	32900	3074	sum		64-105	2.7-6.2
Household waste			[3]		64 +/- 4	1.7 +/- 0.2
Municipal ITCT waste			**diff.**		**20 +/- 11**	**2.8 +/- 0.9**

[1]: Section 4.2.3, **[2]:** (SIS, 2004), (Lebensministerium, 2001), **[3]:** Section 4.1.4

Concentrations: (Skutan and Brunner, 2004), (Schachermayer et al., 1995), (Sokka et al., 2004).

Ref.: reference; Dif.: difference; MBT: mechanical-biological treatment; TT: thermal treatment. Municipal waste = Not collected waste + Diverted waste + Refuse

The structuring/balancing of the system will follow from back to front in the system picture. As data on waste is mostly given as treated amounts or by destinations, the flows entering composting, recycling, refuse collection and not collected waste are converted to P-flows first (see Figure 4.21 and Table 4.25). The flows given in bold face in the figure and in the table both were added together to give the total output of the ‘waste service’ process. (This represents the delay at the generation site of the waste until it is collected by the responsible authority, like the municipality. It is in the waste management process, as collection must be modelled as part of the waste management.) The output equals to the input of the same

process, namely the municipal waste coming from household and ITCT. In other words, the total phosphorus in the municipal solid waste is calculated as the sum of the 'diverted waste' (biogeneous waste + wastes to recovery), 'not collected waste' and the 'collected refuse'. The portion of the phosphorus coming from households was already calculated while balancing the household. However, the municipal waste-P coming from ITCT is not known. Here, the difference of the P in municipal waste and household waste is used to quantify this flow (last row of Table 4.25).

Generated waste is estimated by multiplying the specific waste production by the population in Section 4.2.3. The data on waste production for Turkey is the quotient of the collected waste amounts by the "municipal population receiving solid waste services" (51,8 million people, or 76 % of the population) (SIS, 2004). Using this specific waste production data, the waste generation in the country is extrapolated. The amount of the waste, which is not collected, is calculated for Turkey as the difference of generated and collected waste. For Austria, this amount is neglected. In Europe, in general, data published on waste does not involve waste generation. The collected and managed waste amounts can be found in statistics.

Treatment of the Wastes

Four types of treatment processes (composting, sorting for recycling, mechanical-biological treatment and thermal treatment) take place in the system described in Figure 4.21. The below table calculates their output flows in order to balance the whole system.

Table 4.26. The P-flows through waste treatment

Process	Total Input kt P/a		Output flow	TC	Output kt P/a	
	Tr	At			Tr	At
Composting	1-2	1,1-2,8	Compost (Agr.)	0,99	1,5+/-0,5	1,9 +/- 0,2
Sorting	0	0,1-0,4	Recyclables (ITCT)	0,83	0	0,2 +/- 0,1
			Sorting res.1 (Lf)	0,16	0	<0,1
			Sorting res.2 (TT)	0,1	0	<0,1
MBT	0	0,2-0,4	Rotting endpr. (Lf)	0,57	0	0,2 +/- 0
			MBT residues (TT)	0,43	0	0,1 +/- 0
TT	0	2,2-3,1	TT residues (Lf)	1	0	2,7 +/- 0,2

Total Input: Table 4.25, Table 4.26; Transfer Coefficients: for composting (Obrist and Baccini, 1986), for sorting mass transfer coefficients (assuming homogenous P content), for MBT and TT (Schachermayer et al., 1995; Skutan and Brunner, 2004)

Landfill

As it can be seen in Figures 4.22.a and 4.22.b, the P-flows into the landfills are 11-18 kt P in Turkey and 4.5-6.6 kt in Austria.

C- Wastes from ITCT

As stated previously, only the municipal waste from ITCT is assumed to enter the system described here. There are other waste flows, which will not be taken into consideration. They are either small, or they describe a mere replacement of the substance P, like, excavation material from construction sites, hazardous waste and waste soils, separately collected material from industry and commerce. Only the landfilled and incinerated portions of ITCT sludge enter the waste management besides the municipal wastes.

Waste flows like construction and demolition waste, wastes from mineral origin, waste from wood processing and all others are estimated to have roughly 6-11 kt/a in Austria. In Turkey, they should be more than 100 kt/a, inluding ashes of energy carriers (power plants). These flows come from the process environment and by-passing waste management again enter the environment upon finishing their retention time. They will not be shown in the system here.

4.1.6.3 Balanced Systems

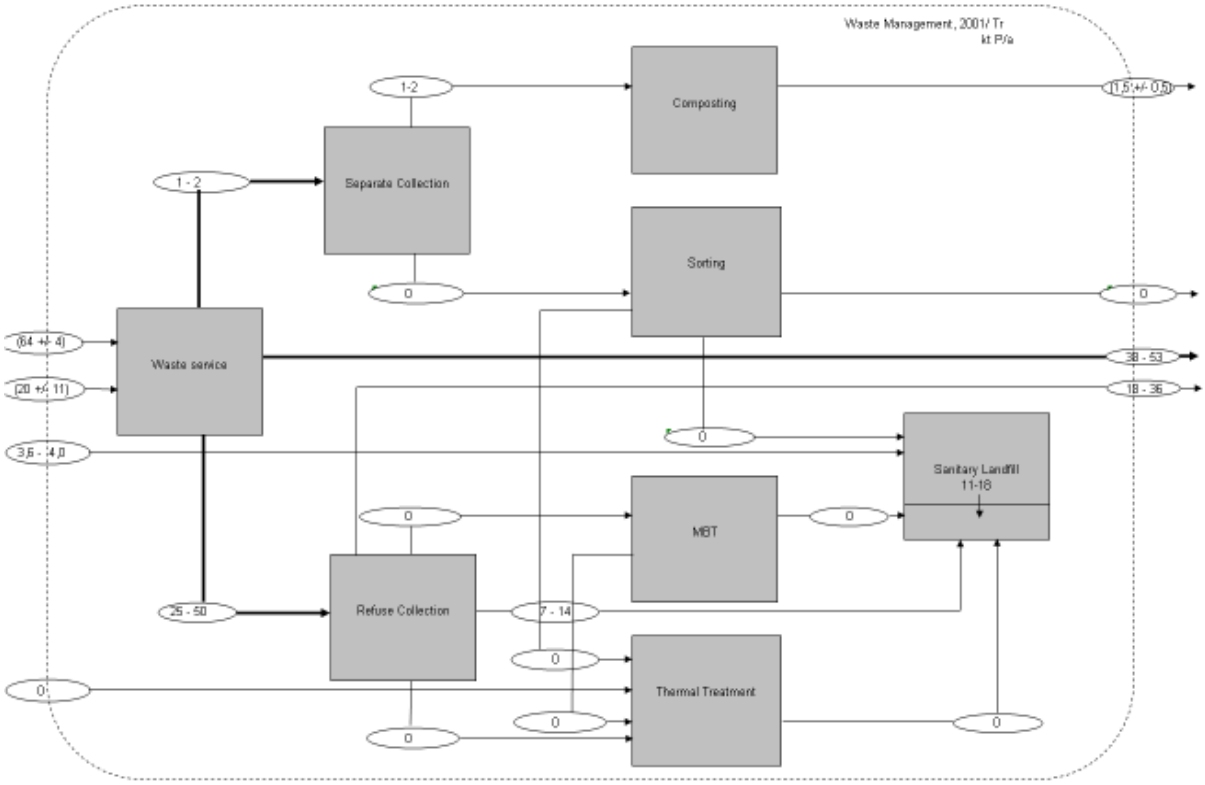

Figure 4.22.a. P-balance in waste management, Turkey, 2001

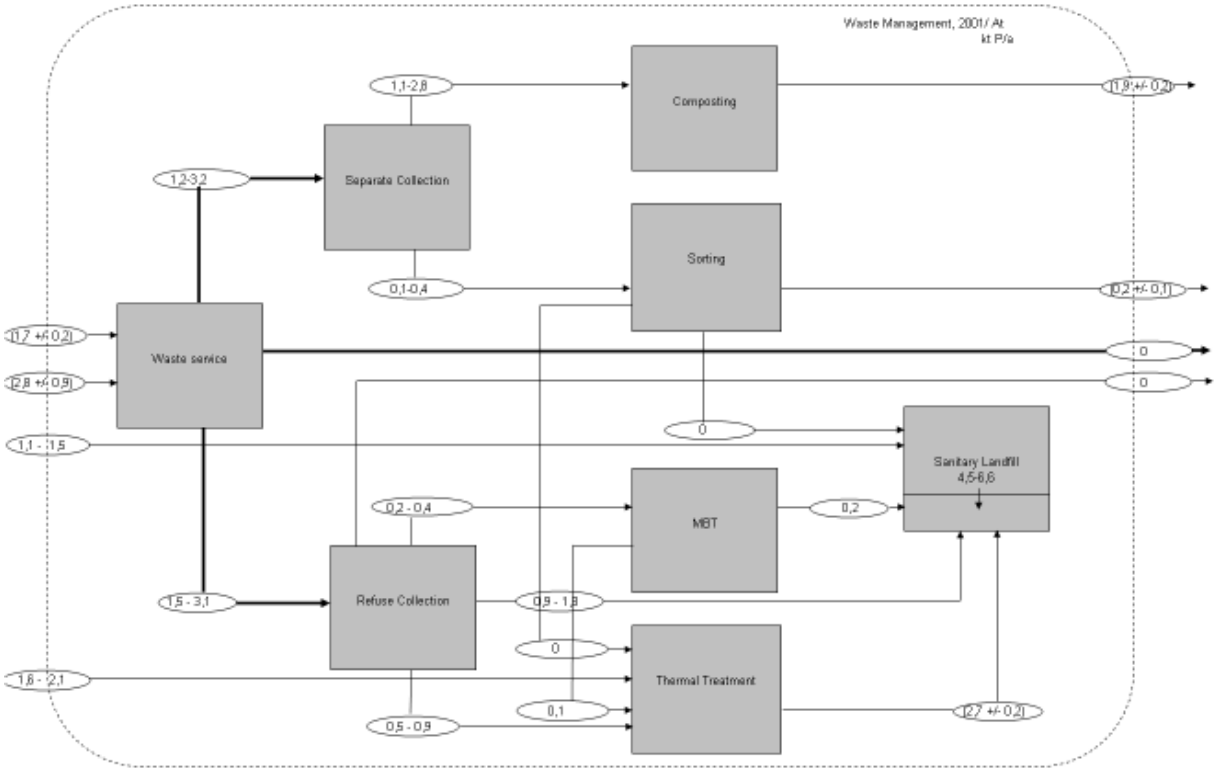

Figure 4.22.b. P-balance in waste management, Austria, 2001

4.1.7 The Regional Material Flow Analysis for the Countries

After quantifying each subsystem at the second level, these are brought together in the first level system. Here these systems are depicted. The flow numbers and the names can be found in Appendix A. The flows, which are not quantified, were foreseen to be technical parameters in the scenarios.

Σ_{imp}= 264-300 Σ_{exp}= 19-24

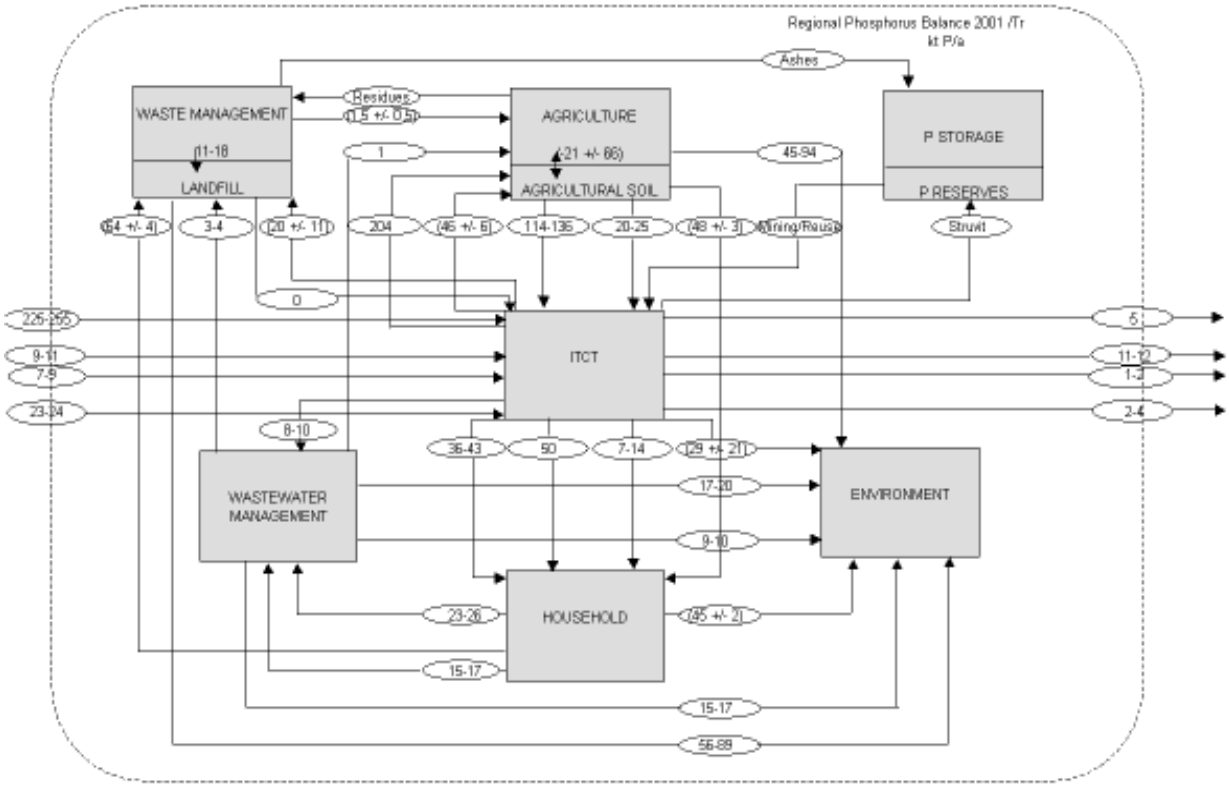

Figure 4.23. Regional Phosphorus Metabolism of Turkey- 1st level analysis

The process environment is a stock process, which receives and accumulates the highly uncertain P-flow of 210-290 kt/a in Turkey and around 16-25 kt/a in Austria.

Σ_{imp}= 53-63 Σ_{exp}= 30-33

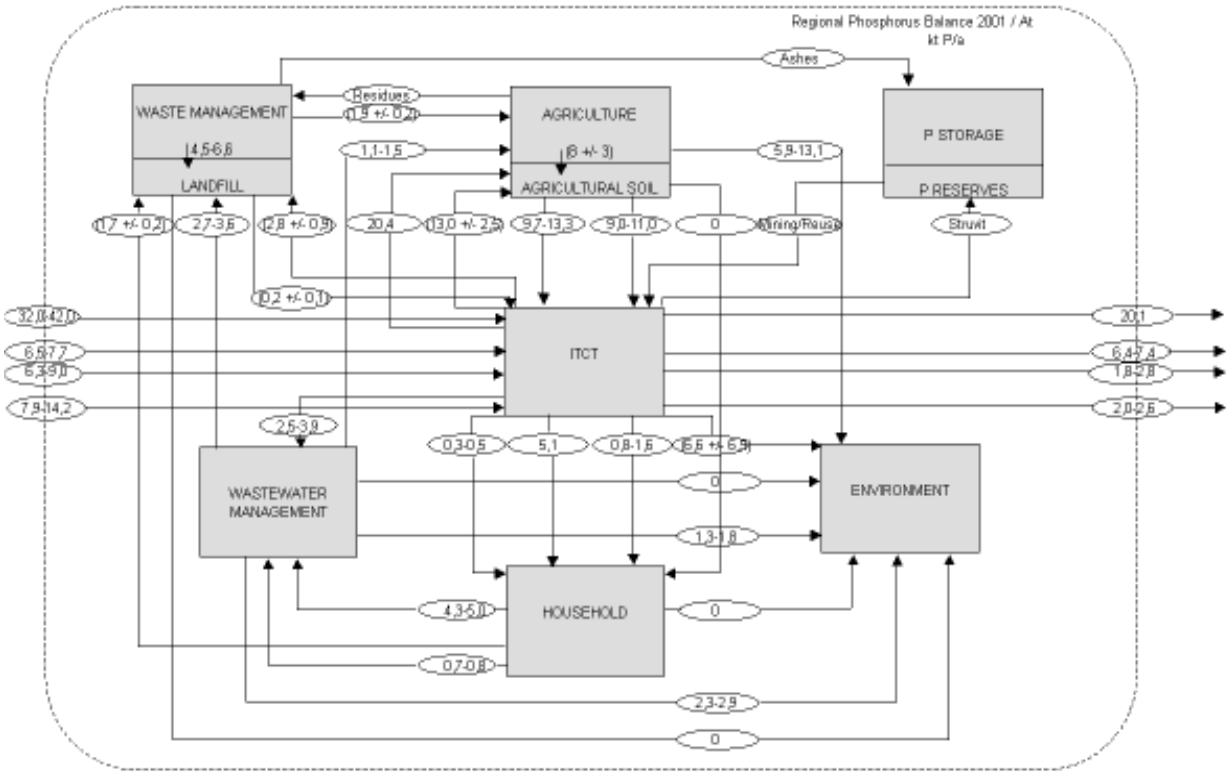

Figure 4.24. Regional Phosphorus Metabolism of Austria- 1st level analysis

4.1.8 Regional Phosphorus Stocks

This part aims to compare the selected geogenic and anthropogenic reservoirs, which differ in their P-stocks and P-concentrations. It will help to decide which of these reservoirs to consider under the 'regional stock'.

There is no impending phosphorus scarcity in the world. While the price for the mineral phosphates has been stagnant lately, and does not point at an economic scarcity, there exist also many reserves and known resources in some countries. Yet, considering the current 100 % import dependency of Turkey and Austria in case of phosphorus, the exhaustible, non-substitutable mineral necessary for life, the possible vulnerability to shortages in the long-term supply becomes obvious (as well as in Europe, which neither has reserves nor production of P worth mentioning on a global scale). For strategic planning, the awareness of this external supply risk is necessary, which could arise for reasons other than scarcity as well. This is also mentioned in (Nötstaller, 2003). On the other hand, in 2000`s, phosphate exporting countries tend to export processed goods like the phosphoric acid and the finished fertiliser goods instead of the P-rock. That means a higher cost for the same amount of phosphorus on the part of the importing countries. However large or small an external supply risk may be, for a vital substance, like phosphorus, the inland stock is important to know.

The probable inland stocks deserve a critical view. In many cases the grade is too low to recover phosphorus. Thus, 'useful stock' based on grade will be defined (see Chapter 4.2) for the purposes of this study, which has a grade of minimum 1% as P.

Below, the largest stocks of P will be assessed one after the other.

4.1.8.1 Biomass (Phytomass + Zoomass)

The above ground portion of terrestrial plants will be taken into account under the name 'phytomass'. Marine biota (such as planktons) is not included. The below ground biota is considered as part of the soil P-stock.

One way of estimating the phytomass phosphorus is, calculating the P-content based on dry mass estimations of forests and agricultural goods. An estimation for Austrian forests in

(Zessner et al., 1997) was made based on the forest dry mass and the tree P-concentrations. Storage in the trees was found to be 300-400 kt P taking the tree-P concentration as 0.03%.

Globally, phosphorus contents of the terrestrial biota were generally estimated from the estimated C mass of the biota. Similarly, on the small regional scale, vegetation types (area; m^2), their specific C contents (kg C/ m^2) and the P/C ratios could be multiplied to end up with the P storage in the biomass (Richey, 1983), which is not a practical way for the larger country-level analysis.

In this work, the forest P storage will be estimated first, as the most important part of the phytomass. To do that, data from (Nabuurs and Schelhaas, 2003) is used, where the C mass estimations on the European forests including Austrian and Turkish forests were made and found to be 500 and 250 Tg C respectively. The forest area in Austria covers 43 % of the whole area, which is 27% in Turkey. Considering the 6-fold area of the Turkish forests, the two-fold higher C value of the Austrian forests (Table 4.27) should be including the type and density differences concerning the carbon content. Trying to balance off this difference, C/P ratios used in the below calculation is adjusted. Based on (Richey, 1983), C/P for the terrestrial biota is roughly assumed to range between 500-850 (the source data being from (Stumm, 1973) as 500 and (Deevey, 1970) as 833). As C/P of terrestrial plants can be as high as 1000, the ranges 500-700 and 700-900 will be taken below for Turkey and Austria respectively.

Table 4.27. Estimation of the forest phosphorus stocks

	Total whole-tree carbon stock, Tg C	C/P for terrestrial biota	P stock in the forests kt P	per capita stock kg P/cap
Turkey	246	500-700	350 - 500	5-7
Austria	500	700-900	550 - 700	68-87

Next, the agricultural areas will be considered. The formerly calculated ‘plant products’ and ‘inland fodder’ phosphorus are two most important flows. Their contribution to the phytomass P stock will be estimated here in the form of ungrazed amounts or the harvest remainings left back. The transfer coefficient in pasture utilization and the harvest index both will assumed to be 0.50. That is, the remaining and ungrazed amounts will be equal to the removed P, which is

a rather high estimation for this stock. This amount, as calculated in the section ‘agriculture’ is shown below:

Table 4.28. Estimation of the above ground P-stock in agriculture

	as produced, kt P/a			per capita stock
	Harvest remainings	Ungrazed amounts	Sum	kg P/cap
Turkey	114-136	56-72	170-208	2-3
Austria	9.7 - 13.3	27.7 - 34.1	37.4 – 47.4	5-6

Terrestrial phytomass includes much less P-stock than the soil, but might have as much (forests 0.02-0.08 %) or up to 7-10 times (sunflower seed 0.7-1 %) concentrated P as the soil. Highly concentrated phytomass is not abundant, and is usually consumed for nutrition. 0.05 % would be a good estimation for the ‘phytomass stock’ phosphorus concentration in general.

Zoomass differs from the phytomass in the use of phosphorus. Besides taking part in metabolic reactions, here, phosphorus makes up an important part of the structure. For the animal stock, the GVE sum (see Table 4.2) and 500 kg/GVE and 300 kg/GVE will be taken into account. The P-concentration of whole animals will be assumed to range between 0.6-0.8 percent.

Table 4.29. Estimation of the P-stock in zoomass

	Sum GVE	Live weight, kg	P concentration, %	P Stock, kt	per cap. stock
Turkey	13127198	300	0.6-0.8	24 - 32	0.3-0.5
Austria	2210612	500	0.6-0.8	6.6 – 8.8	0.9-1.1

4.1.8.2 Manure

Table 4.30. P-stock in manure

	Manure as produced, kt P/a	Stock in n years	per capita stock, kg P/cap
Turkey	70-90	80*n	1.0-1.3
Austria	35-37	36*n	4.3-4.6

This amount is already estimated in the section agriculture as produced manure, so, it refers to a flow and not to a stock. The reason of mentioning this flow under the phosphorus stocks is its relevance as a secondary resource of phosphorus.

4.1.8.3 Solid waste

Referred to as 'solid waste' here, the municipal wastes and municipal sewage sludges will be taken into account. The waste amounts produced in one year will be multiplied with a range of P-concentrations, to estimate the P in municipal waste. Municipal waste is assumed to have 0.11-0.14 % P (w/w). Municipal sludge has already been calculated in the wastewater management section.

Table 4.31. P-Stock in municipal waste and municipal sludge

	Municipal Waste			Municipal Sludge	Total	Stock in n years	per capita stock kg P/cap
	Specific, kg/cap*d	Total, mio t/a	P Mass, kt/a	P Mass, kt/a	P Mass, kt/a		
Turkey	1,3	33	36 - 46	4,2 - 5,0	40-51	45*n	0.6-0.7
Austria	1.0	3	3 - 4	5.4 – 7.2	8.4-11.2	10*n	1.0-1.4

Concentrations: estimated
Waste generation: (SIS, 2003), (Lebensministerium, 2001)

4.1.8.4 Agricultural Soil Storage (0-20 cm)

Estimations on the phosphorus fertility level of the agricultural top soil will be made and the corresponding storage will be calculated. Looking at the fertilization histories of both countries and the fertilizer consumption in time (Figure 4.3), one can come up with some conclusions. Austria has reached the maxima in P-fertilizer use already in 1970`s. Fertilizer consumption is reduced since then also after having reached a certain fertility level in the soil and due to the water quality regulations.

Turkey had a fast increase in use just in the same years, which suddenly stabilised in 1980`s. That the P-fertility level of Turkish soils has been low, but increased slightly between 70`s and 80`s through fertilizer applications is already shown in (Kaplan et al., 2000). The "very low, low and middle" ranges of fertility changed from "45, 30, 11 %" of the soils respectively to "33, 33, 18 %". Highly fertile soil proportions remained almost the same in size. The phosphorus enrichment in the soil will not consistently increase at the same pace. In 2000`s, new areas will be watered in Turkey thanks to the South-eastern Anatolia Project (GAP), which will considerably add up to the irrigable agricultural areas in need of fertilization. There is not enough investigation on the fertility level of the Turkish soils. Based on the works of (Kaplan et al., 2000), (Lindenthal, 2000), and (Zessner et al., 1997), the P in agricultural topsoil (20 cm) will be calculated, assuming 1,5 t/ m^3 soil density, 500-1500 ppm and 800-1700 ppm P concentrations for Turkey and Austria respectively.

kg P/ha = 10.000 x 0.20 x 1,5 (t/m3) x ppm / 1.000

Table 4.32. P-Stock in the agricultural topsoil

	Agricultural (Aa) ha	P concentration ppm	P content in topsoil kg P/ha	P Soil storage kt	Per capita stock kg P/cap
Turkey	$2.65 *10^7$	500-1500	1500-4500	$4 *10^4 – 12 *10^4$	580-1700
Austria	$1.5 *10^6$	800-1700	2500-5000	$4 *10^3 – 8 *10^3$	500-1000

4.1.8.5 Ordinary Soil Storage (0-100 cm)

The 1 m. depth of the pedosphere is taken into account to estimate the soil storage. An excluding list for areas is prepared for this calculation. Agricultural areas are treated separately above. The mountainous areas, built-up areas and water surfaces are taken from statistics and excluded in this part. The data on the areas is taken from 'land cover' statistics. It is somewhat different than the 'land use' data cited and used in the section 'agriculture'. For example agricultural area here refers only to arable land and permanent crops, and does not involve the pasture land. It is excluded from the 'ordinary soil' storage. In Austria, the pasture land with an area of 19 200 km^2 is also used more intensely for agricultural purposes and is even partly fertilized. Nevertheless, the soil storage of pasture land is inclusive to the ordinary soil storage in this work (see the area Ap defined below).

Table 4.33. Land-cover in Turkey and Austria

	Area (A) km^2	Agricultural (Aa), km^2	Marsch /Rock (Ar)	Waters (Aw)	Built-up (Ab)
Turkey	780 580	265 400	147 550*	10 780	2 410
Austria	83 870	14 600	8 390**	1 430	4 400***

(Statistik Austria, 2003)

(SIS, 2003)

Umweltbundesamt

* (pastures, marshes, rocky land) – pastures = 271 330 – 123 780 = 147 550

** given as „alps“

*** Flächenverbrauch 2003 (Baufläche + Verkehrsfläche + Erholungs- und Abbauflächen)

Ap, the area, for which the pedospheric phosphorus stock is calculated, will be estimated as follows:

Ap = [A- (Aa + Ab + Ar + Aw)]

The lithospheric soil concentration for Austria is given as 0.05-0.15 % at 85% probability level<. This is also the generally accepted range for soil phosphorus; thus, the same values are taken for Turkey as well. Assuming 1.5 t/m^3 soil density for the 0-1 m layer, the P content would be:

Table 4.34. P-Stock in the pedosphere

	Ap km^2	P concentration ppm	Soil storage kt	Per capita stock kg P/cap
Turkey	354 440	500-1500	$3 *10^5 – 8 *10^5$	4300-11500
Austria	55 050	500-1500	$0.5 *10^5 – 1,2 *10^5$	6200-14900

4.1.8.6 Ashes from thermal power plants (Turkey) and incineration (Austria)

Depending on the material burnt or incinerated, the P content in the ash differs. Some data is gathered together in the below table:

Table 4.35. P-contents of different ashes given in the literature

Energy carrier	% P in ash	Reference
Wood	1.5 – 2.5	(Saarela, 1998)
Straw	1 – 1.5	(Saarela, 1998)
Coal	~ 0.2	(Saarela, 1998)
Municipal Solid Waste	Slag: 0.5 Ash: 0.6	(Schachermayer, 1995)
Sewage sludge, mono-incinerated	4 - 8	(Cornel, 2002)
P-rich sewage sludge, mono-incinerated	7 – 11	(Cornel, 2002)

In Turkey around 16 Mio t waste was generated at thermal power plants in 1997 (SIS, 2003). Assuming 0.6 % P concentration in these residuals, which are mainly slag and ash, some **95 kt P/a** is found to be produced annually through this process.

In Austria, part of the solid waste generated is incinerated. The amount of municipal solid waste incinerated is 456 kt, leaving 123 kt behind as residues for land filling. These amounts also verify the average municipal waste P-concentration of 0.14 % and the incineration residuals concentration of 0.5 % reported in (Schachermayer et al., 1995), as P remains in the ash. The P-flow coming out of the incineration process is around 620 t (**0.6 kt P**) based on these data.

Annual per capita stocks of P associated with the ashes mentioned above are 1.4 kg P/cap in Turkey and 0.07 kg P/cap in Austria.

4.1.8.7 Geological Reservoirs

Turkey has some phosphorus resources. These are concentrated in the eastern part of the country, and are not being exploited due to the lack of economic feasibility. The only important part is in Mardin Mazidagi region having 26 Mio t P (**26 000 kt P**) (Yildiz, 2003), with an average grade of 12 % P_2O_5 (~5 % P). (given as “3 mio t with 5-12 % P_2O_5; 71 mio t with 13-25 % P_2O_5; 261 mio t with 8-15 % P_2O_5” in (Yildiz, 2002)). The per capita stock amounts to 375 kg/cap. In Austria, a small amount of P-reservoir exists around Bregenzerwald region, which is negligible.

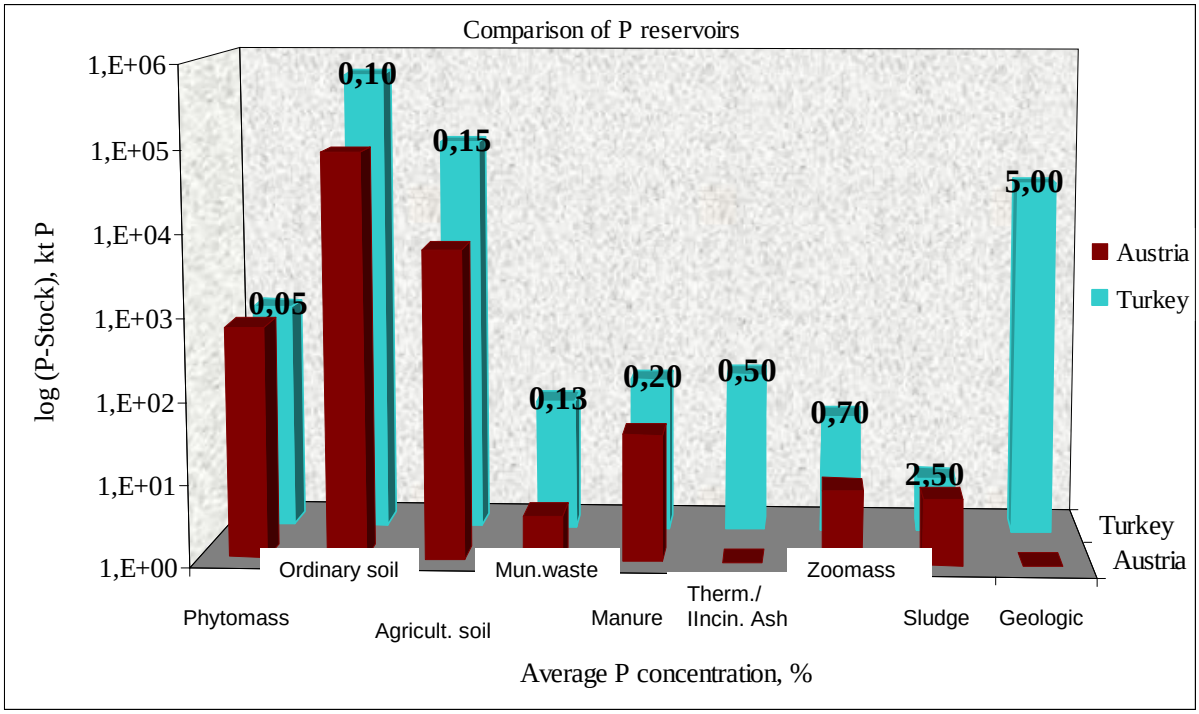

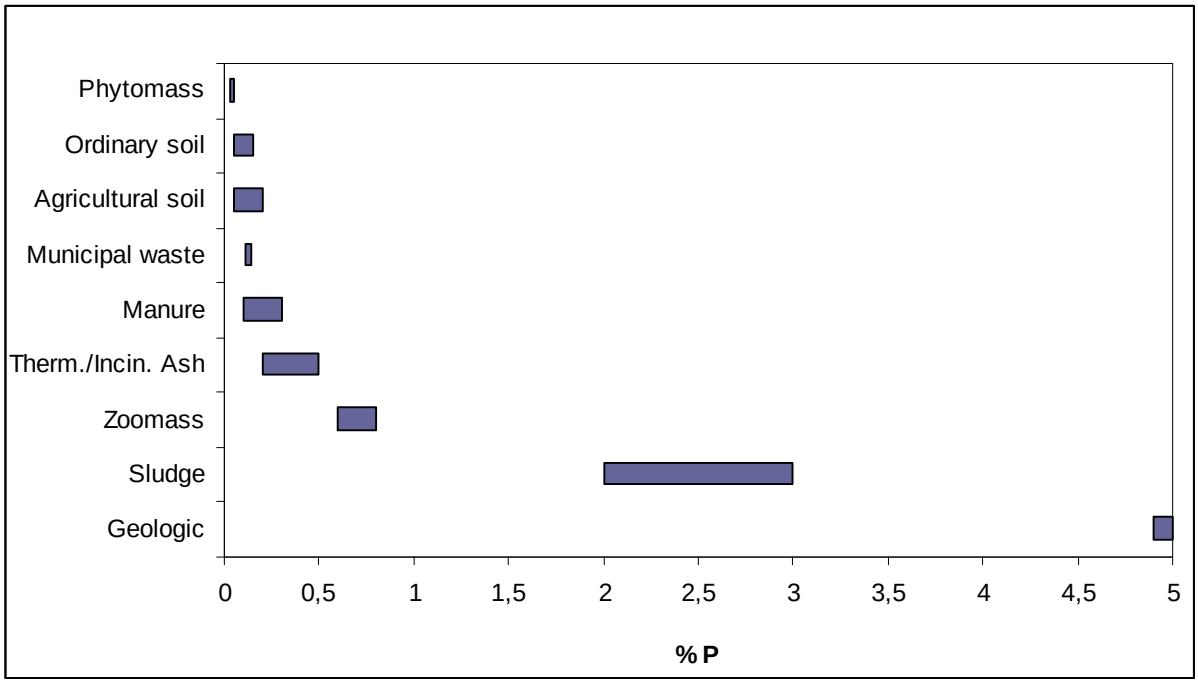

Figure 4.25. Estimations of phosphorus stocks in the regions and the concentration ranges of them (with average P concentration on the corresponding bar)

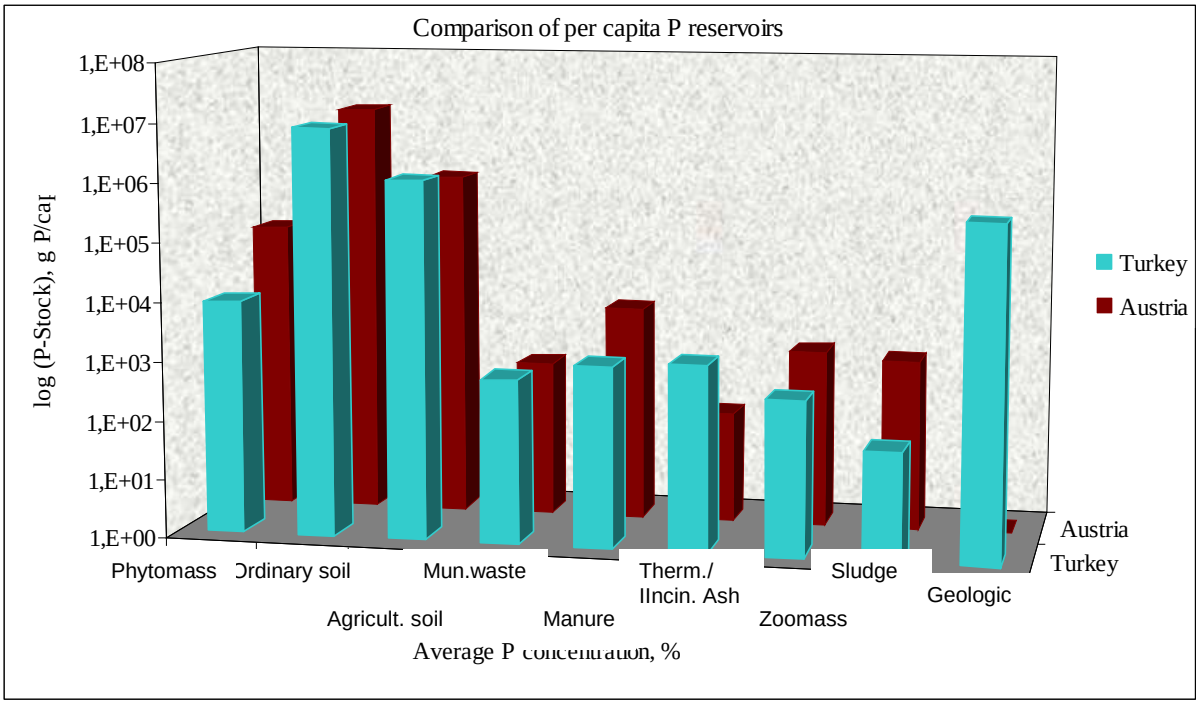

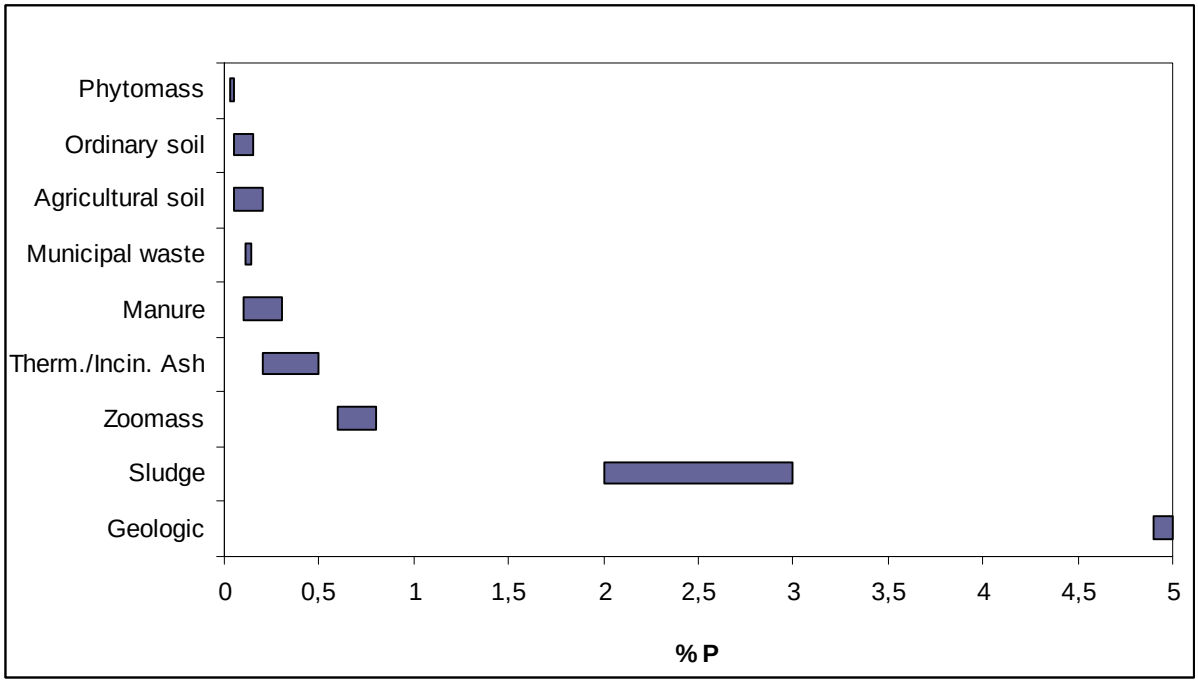

Figure 4.26. Estimations of per capita phosphorus stocks in the regions and the concentration ranges of them

4.2 Evaluation of the Material Flows

Earlier in this chapter a static MFA system confined to the national boundaries was designed. This evaluation aims at: 1. assessing the national MFA carried out in the first part on a wider spatial and temporal scope and 2. suggesting long-term management solutions.

The following section compares per capita phosphorus flows in two regions. Then, the hinterland consumption of the resource is calculated based on the import data determined in Chapter 4.1. Next, a proxy system is designed, involving the hinterland, the key flows and stocks. Indicators for the measurement of the P-management performance are defined on this proxy system. The indicators are calculated for both countries and compared. Finally, the proxy system and the indicators defined on it are applied to scenarios, demonstrating their usefulness for measuring the effects of proposed management decisions, and for monitoring future changes of the system.

4.2.1 Comparison of per capita flows

Per capita flows are calculated by dividing each flow in the balanced systems (Chapter 4.1) by the population. Systems do not need to be balanced again here.

Subsystem agriculture is compared first for the two regions: Agricultural flows are important in judging the sustainability of the regional P metabolism, especially with respect to the management of the agricultural soil. Imports of the goods into agriculture leading to accumulations or depletion in the process, and different productivity levels of countries can be compared easier by studying the per capita flows.

3 kg fertilizer P per capita is applied on the agricultural soil in both countries (see Figure 4.27). While one sixth of this amount comes from recycled goods in Austria in 2001 (0.5 kg through compost + sewage sludge), the whole 3 kg comes from mineral fertilizer in Turkey. The flow ‘fodder from industry’ shows the P in feedstuff, which does not come from inland fodder production. This includes imported fodder and industrial by-products used as fodder. In Austria, the flow ‘fodder from industry’ mostly comes from imported fodder rather than from by-products and is twice as high as in Turkey (see ITCT). In Turkey, however, most of the P in this flow is made up of by-products, and little of it comes from import.

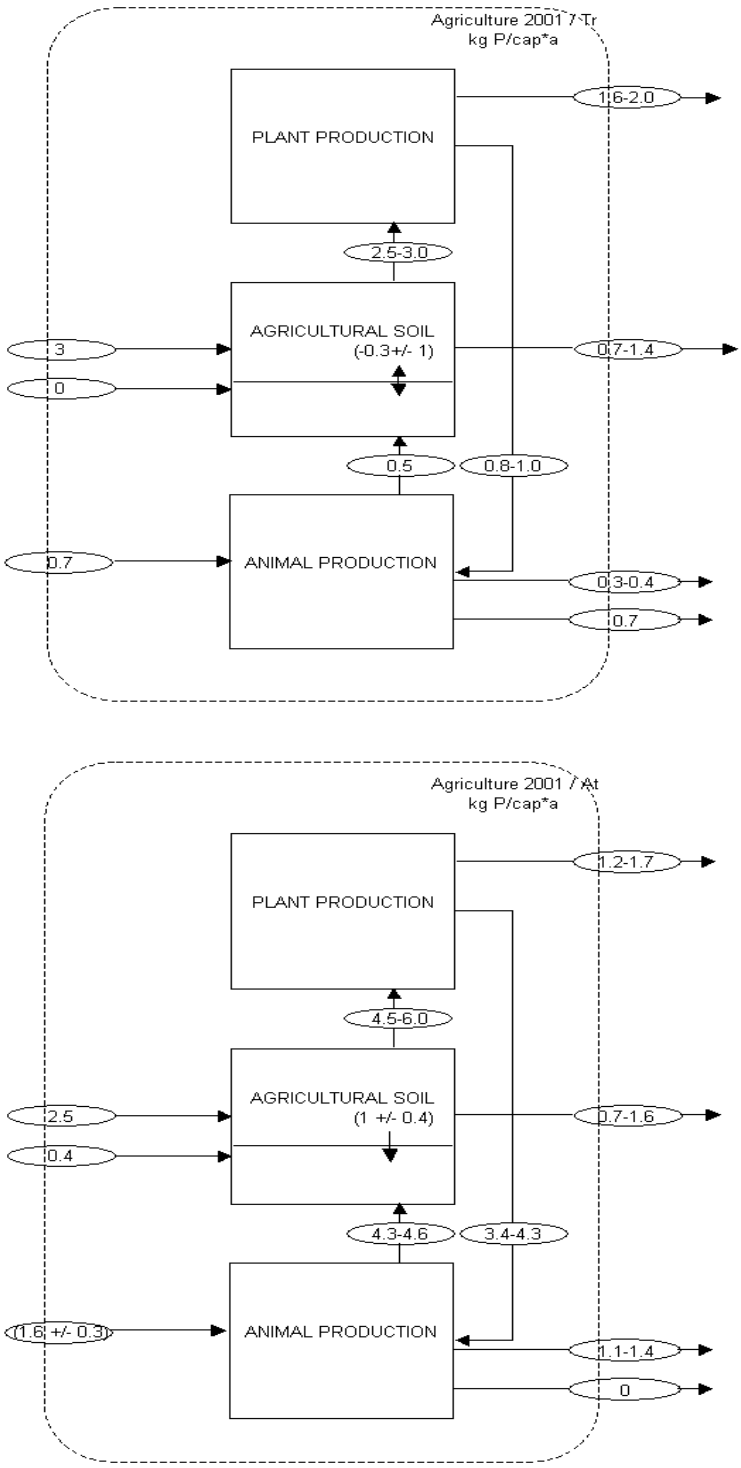

Figure 4.27. Per capita flows in agriculture (see appendix for the names of the goods)

Per capita P leaving the agricultural sector in plant products is similar in both countries. It is even slightly higher in Turkey than in Austria because the diet is more plant based. This is the only flow in this sector which is higher for Turkey. Yet, looking at animal products, one sees that Austria produces 4-fold amount of P, and the per capita manure-P ending up in the soil is

10-fold of that in Turkey. This indicates that the type and level of agricultural production differs widely between these two countries. Whereas Turkey produces mainly plant-P with the imported raw and fertiliser P, Austria produces animals-P using most of the inland plant produce and additional imported fodder. In agricultural production Austria chooses value added forms, producing and consuming at the higher trophic level.

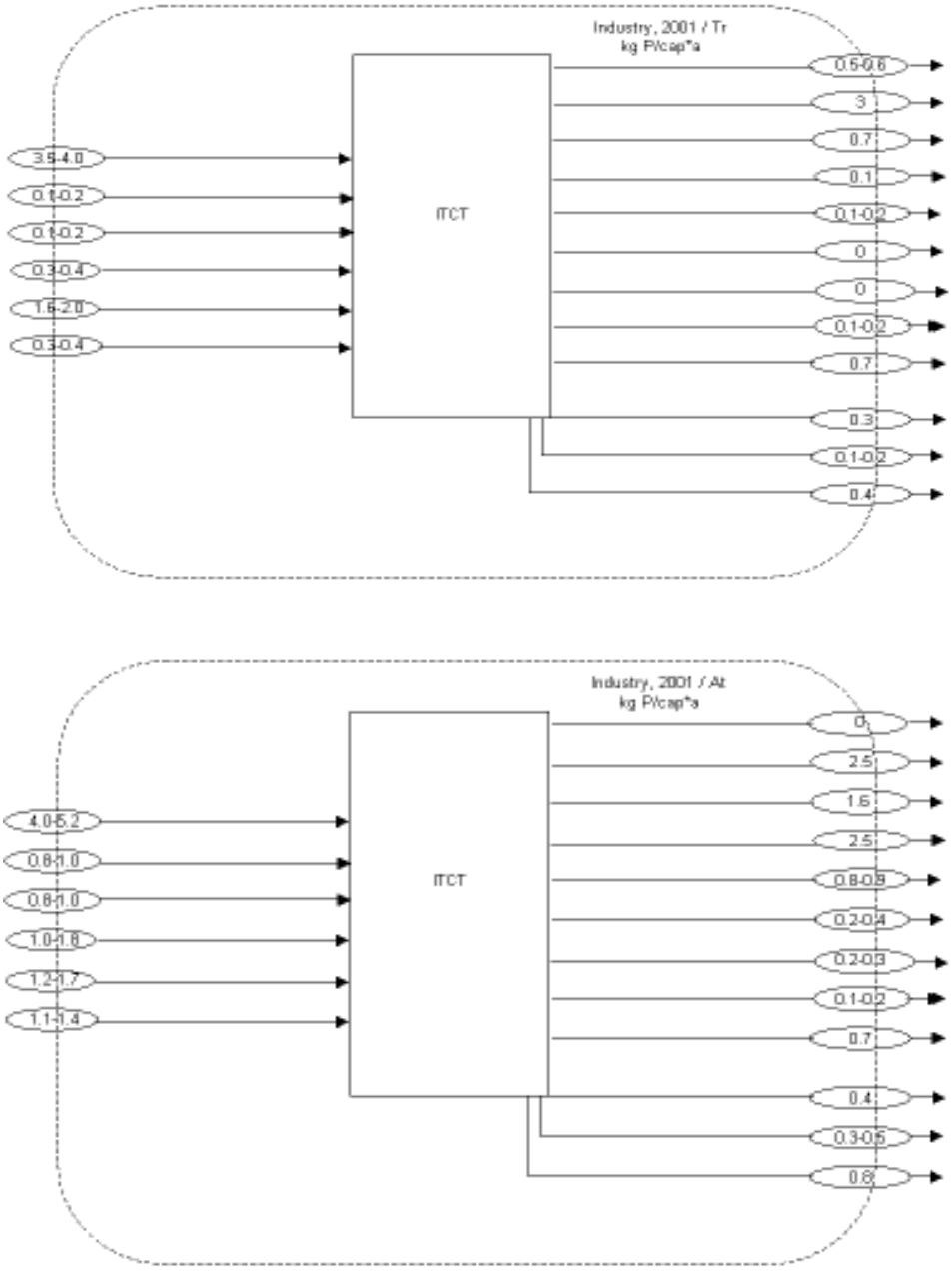

Figure 4.28. Per capita flows in ITCT (see appendix for the names of the goods)

Comparing import and export of P in both countries (Figure 4.28) leads again to different conclusions regarding their P-metabolism: Turkey is importing P to cover its own needs, whereas Austria is active in the international trade of the substance (import-export flows).

Both countries produce phosphorus fertilizer. P-rock and P-fertilizer import (3.5-4 kg/cap*a) in Turkey is 90% of the whole P import, whereas in Austria it is slightly more than half. The amounts imported and exported through foodstuff and fodder are negligible for Turkey. Total P export itself is negligible. On the other hand, Austria imports and exports both raw P and goods rich in P: per capita fertilizer-P export of Austria is 25-fold of the per capita fertilizer export of Turkey. P imported through food, fodder, as well as through the group called others is considerably high (> 500 g/cap*a). P import through food and fodder is 9 times higher for Austria than for Turkey, per capita P export through food is 4-5 fold. Foodstuff imports and exports include < 5% animal product related P in Turkey. In Austria, this value is 20 to 30%. In Austria, import of foodstuff is balanced with export, whereas there is a net import of fodder-P. 'Others' import mainly consists of 1-2 kg/cap*a calcium phosphates in Austria, which are used in all nutritional, pharmaceutical and metal industries, and also as feed additive. Turkey continues the use of P as a builder in detergents (0.5 kg/cap*a P). Among the flows leaving the ITCT <u>for consumption</u>, detergent-P in Turkey and fodder-P in Austria stand out. Concerning the flow 'P raw & fertilizer', net import of Turkey is higher than that of Austria. This means, Turkey uses more P per capita as raw material and fertilizer than Austria. In contrast, Austria imports (and also exports) more P per capita in finished products than Turkey. Surprisingly enough, the <u>overall net import</u> amount to some 4 kg/cap*a for both countries.

There is another surprising trend in the household (Figure 4.29): Although animal agriculture is much more developed in Austria, more P per capita enters the household in Turkey through foodstuff than in Austria (720 vs. 630 g/cap*a). These amounts include around 16% animal products in Turkey, but 55% in Austria (see 'Household', Chapter 4.1). Although the per capita crop removal of P from the soil is two times higher in Austria than in Turkey, Austria feeds with two thirds of this amount the animals and with one third the people (Besides being used as fodder, plant products are also exported in Austria.). Other important differences in household consumption are the 10-fold use of detergent-P in Turkey and the burning of manure for heating purposes. The ashes cause P-rich wastes, which are not managed.

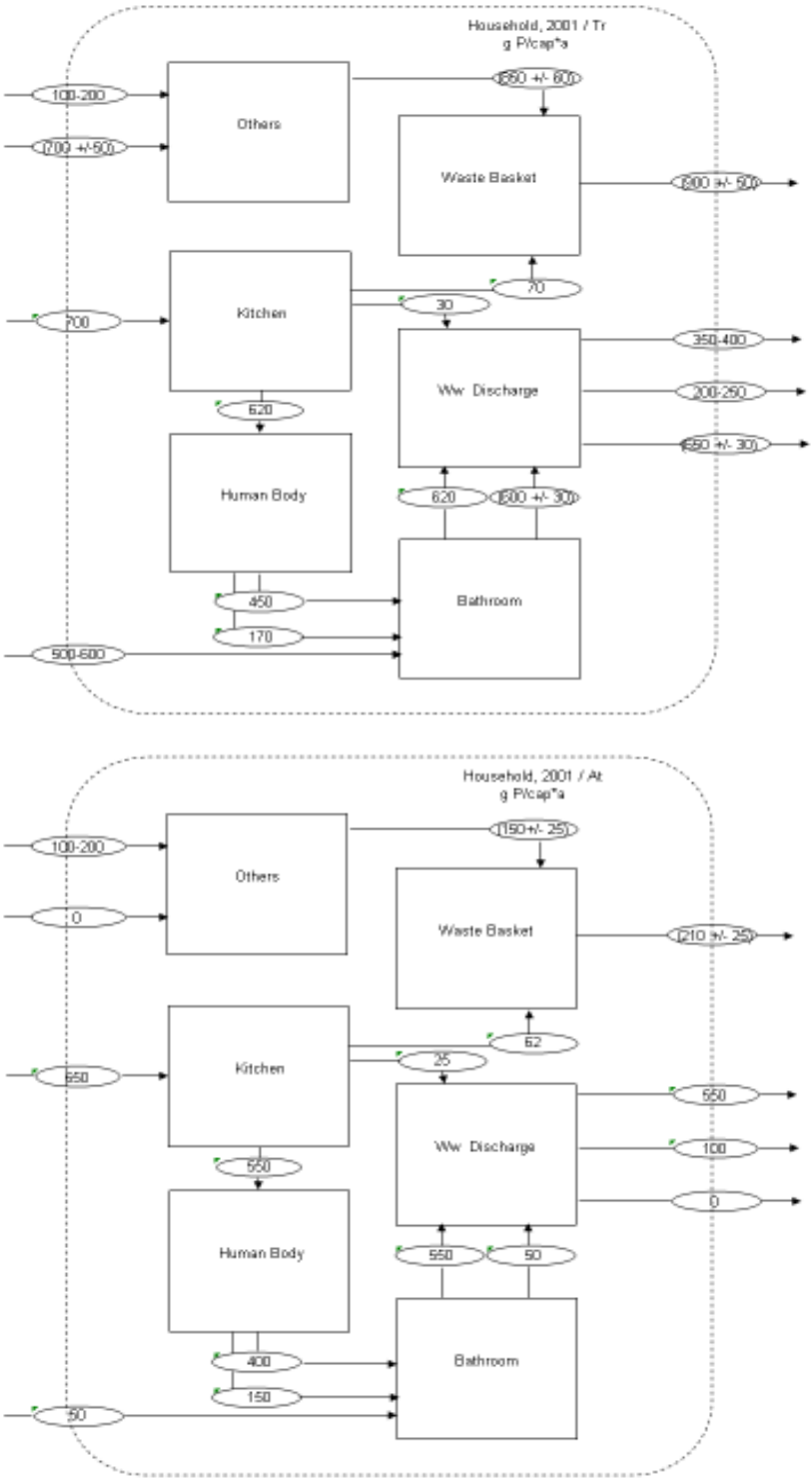

Figure 4.29. Per capita flows in household (see appendix for the names of the goods)

Wastewater-P produced in Turkey is estimated to be around 4 g/cap*day. Giving up detergent related P reduced this daily load considerably in Austria (2 g/cap*day). Wastewater produced in Turkey goes only partly to the sewer systems and cesspits (Figure 4.30). This explains the loss from households in Turkey. There are P-losses in this subsystem in both countries, before or after treatment.

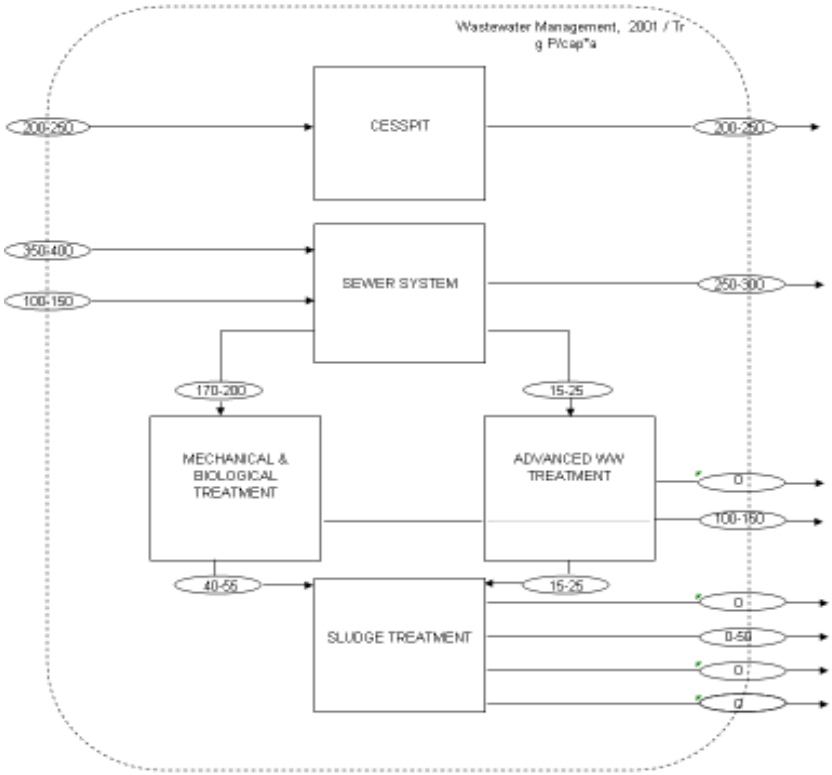

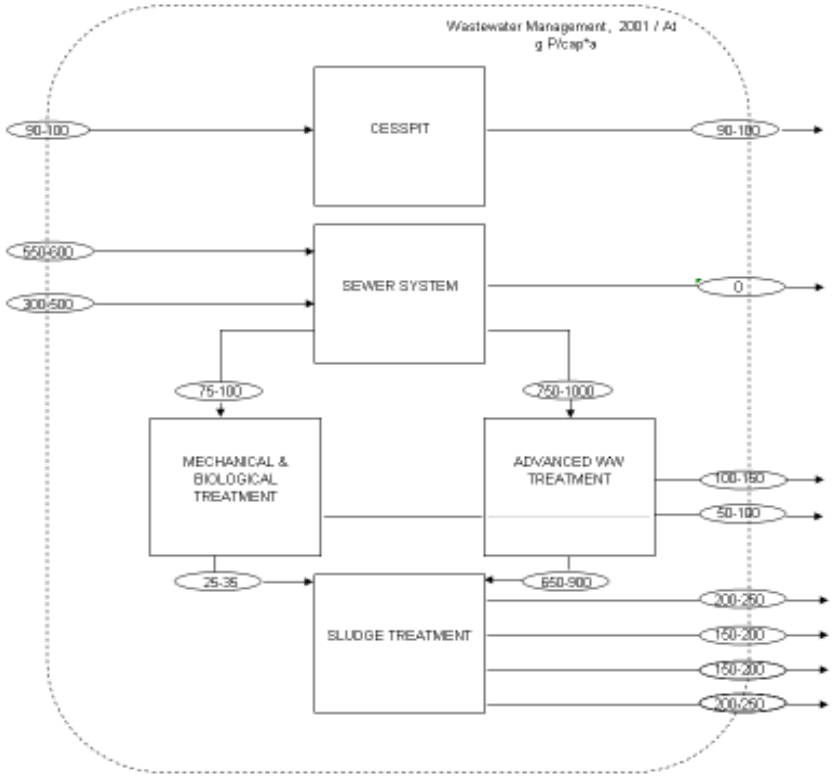

Figure 4.30. Per capita flows in wastewater management (see appendix for the names of the goods)

In both countries, around 600 g P /cap*a leaves the system to the environment, of the overall collected amount entering the wastewater management (including the lost/unknown sewage sludge, excluding the landfilled and reused sludge). It should be kept in mind that another 650 g P /cap*a in Turkey is produced as wastewater, but not managed, thereby entering the environment directly from the households without undergoing collection or treatment. 650-900 g P /cap*a is converted into sewage sludge through advanced treatment in Austria, which is a negligible amount in Turkey.

Subsystems wastewater management and waste management are designed in different ways. In case of waste management, only the managed- collected wastewater from households enter this system, the rest enter the environment. However, in case of waste management all waste from households, managed or unmanaged, enter the system. Some waste is shortcutting it and leaving to the process environment. This difference is due to the structure of available data and ease of handling.

The amount of ash in the waste leads to a P-rich waste in Turkey. Ash and slag can cover 50% of the waste in the winter months depending on regions (SPO, 2001a). However, it is predominantly this portion of waste which remains unmanaged. That means, a high amount of P in waste leaves the system shortcutting it and heading the process environment. Of the 1200 g/cap entering the system in Turkey, only 10% goes to the sanitary landfill. Half of the P entering is not collected and lost in the environment. Around 30% is collected and removed, but not into the sanitary landfills. Most of this waste is dumped. Only little sewage sludge enters the system and is disposed of in the landfill. Thermal treatment does not exist, nor does the separate collection. Some symbolic amount of composting is carried out after sorting the collected refuse. In Austria, P in household municipal waste is higher than that from ITCT. The amount of P in sewage sludge entering the system is comparable to them. Through the waste, on average 900 g P is produced (including sewage sludge). More than 70% ends up in sanitary landfills, of which sewage sludge is two thirds. This disposal route is not allowed anymore in the Austrian regulations. Roughly 550 g of P is collected as municipal waste (household + ITCT), and half of it separately. In separate collected waste, P is mostly in the biogenic portion, so around half of this municipal waste can be composted according to the data published. As a result, using an elaborated waste management scheme, Austria recycles a portion of P, which is close to 30 % of all the P wasted in 2001 (see Figure 4.31).

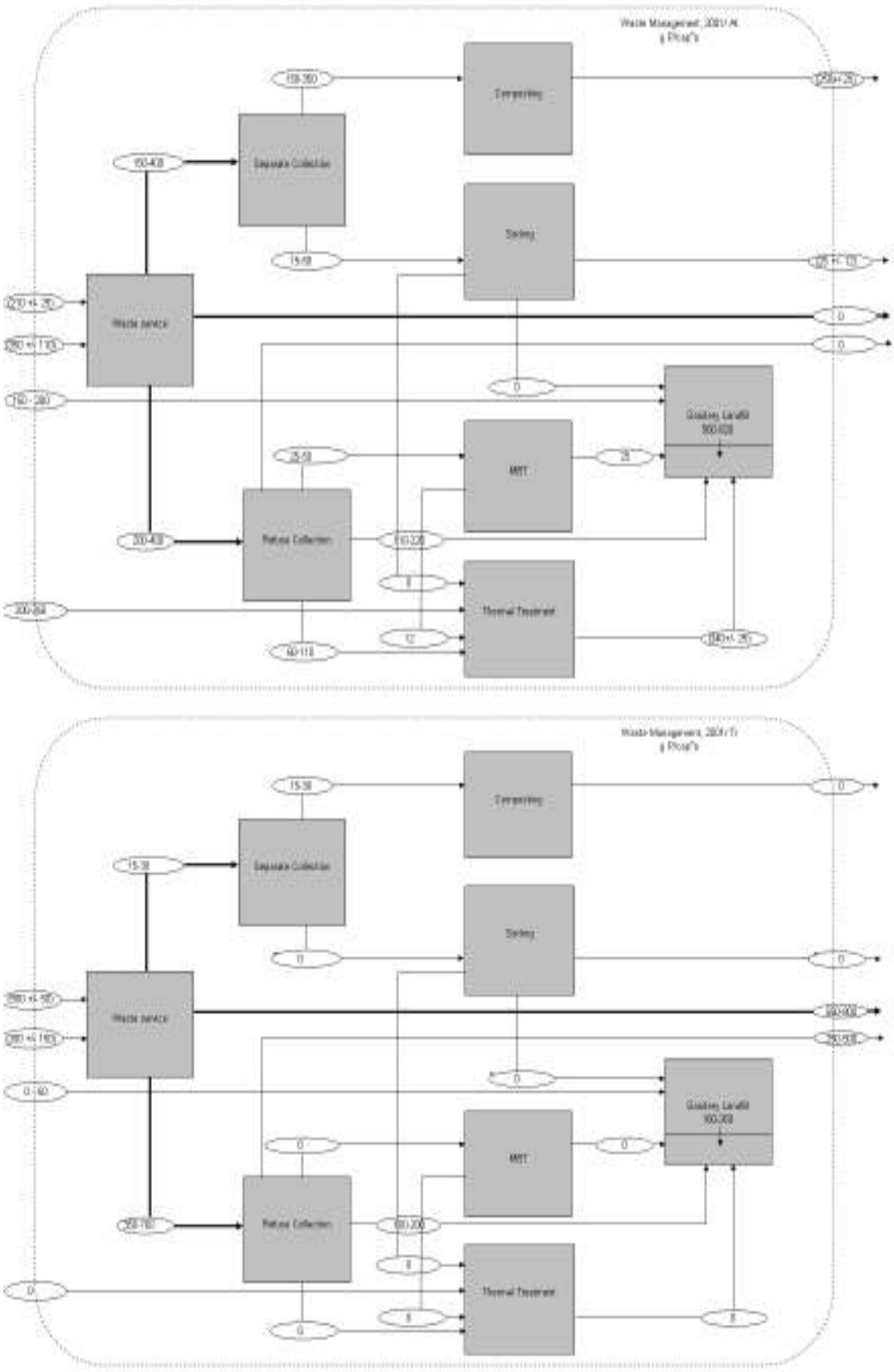

Figure 4.31. Per capita flows in waste management (see appendix for the names of the goods)

In Austria, animal agriculture is run with high amounts of fodder, which is partly imported. This is not the case in Turkey. It is obvious that Turkey did not have the ‘green revolution’ and the high agricultural productivity period the way European countries did from 1960`s to the 1990`s. Modern agricultural techniques and high technology together with a diet based on animal protein in Europe is responsible for the nutrient flows observed today. The more meat is produced, and the more meat consumption shifts away from beef towards poultry and pork, the higher feed phosphate consumption becomes. In the same period, agriculture in Turkey remained local and relatively small scale. Animal agriculture even considerably decreased in this period. The inefficiency in Turkish agriculture is also seen in statistics: The 46% employment rate in agriculture contributes only 14 % to the GDP. There is both resource loss and environmental pollution. Manure being used as a fuel and ashes not reused but thrown away is a wasteful practice in every respect. Much less mineral fertilizer would be necessary if this could be returned to the agriculture.

Turkey exports less P-including goods than Austria does. Competition with agricultural products is difficult considering the high subventions in the EU. Being in the Common Market since 1980’s with Europe, though not yet a member country, Turkey has been disadvantaged in the agricultural sector. Turkey even imports agricultural goods from Europe, which are produced in the country without subventions. Exports are limited, taxed and highly controlled. Agricultural production holds at the self sustaining level. While animal agriculture dwindled over time, plant production became more important. Animal production is expensive in Turkey, also because pork as a cheaper alternative is not consumed and there is not enough fodder available.

Below, per capita flows are tabulated with the flow numbers and the names. The table uses average values and in few cases the most probable value is chosen from the range. The values in the table are not rounded. The management system below and the scenarios are established using these numbers. However, on system pictures the results are rounded. For example, flow *2.4* representing food intake appears as 600 g for both countries in Figure 4.34, although the originally calculated values are 620 g in Turkey and 550 g in Austria.

Table 4.36. Average per capita flows of the MFA for P

1st LEVEL				2nd LEVEL			
No.	Name	Tr g/cap*a	At g/cap*a	**No.**	Name	Tr g/cap*a	At g/cap*a
1	Imp P raw&fert	3750	4600	**2.1**	P removed	2700	5300
2	Imp Food	125	875	**2.2**	Manure	450	4500
3	Imp Fodder	125	900	**2.3**	Inland Fodder	900	3850
4	Imp Others	325	1400	**2.4**	Food	620	550
5	MunHhWaste	900	210	**2.5**	Urine	450	400
6	Sl to Wman	25	400	**2.6**	Faeces	170	150
7	MunIndWaste	300	350	**2.7**	KWw (Kitchen)	30	25
8	Recyclables	0	25	**2.8**	Excrements	620	550
9	MunIndWw	125	400	**2.9**	Solid Waste	850	150
10	Residues	0	0	**2.10**	Solid Waste fr. kitch.	70	60
11	Compost	0	250	**2.11**	BWw (Bathroom)	600	50
12	Sl to Agr	0	175	**2.12**	Mun Ww to MB	185	90
13	P fert cons	3000	2500	**2.13**	Sludge	50	30
14	Fod from ind	650	1600	**2.14**	Mun Ww to Adv	20	900
15	Detergents	550	50	**2.15**	Sludge	20	800
16	MunHhWw	375	550	**2.16**	Cess Remains	225	95
17	WwtoCpit	225	100	**2.17**	Effluent Adv	0	125
18	Plant prod	1800	1425	**2.18**	Effluent MB	125	75
19	Food cons	700	650	**2.19**	Sludge Inc	0	225
20	Animal prod	325	1250	**2.20**	Sludge Lfill	25	175
21	Others cons	150	150	**2.21**	Sludge Agr	0	175
22	Fuel biomass	700	0	**2.22**	Sludge Unkn	0	225
23	Losses	420	800	**2.23**	Diverted Waste	20	300
24	MunWw Lost	275	0	**2.24**	Refuse	500	300
25	Effluents	125	200	**2.25**	Biogeneous waste	20	250
26	HhWw lost	650	0	**2.26**	Wastes to recovery	0	30
27	Sld+cpitt to env	225	325	**2.27**	Refuse to MBT	0	40
28	Wastes to env	1050	0	**2.28**	Refuse to TT	0	90
29	Ashes	0	0	**2.29**	Landfilled refuse	150	130
30	Erosion	1000	1150	**2.30**	Sorting residues	0	0
31	Mining/Reuse	0	0	**2.31**	MBT residues	0	15
32	Struvit	0	0	**2.32**	Recycling residues	0	0
33	Exp P fert	100	2500	**2.33**	Rotting endproducts	0	25
34	Exp Food	175	850	**2.34**	Therm. treatment res.	0	350
35	Exp Fodder	0	275	**2.35**	not collected waste	700	0
36	Exp Others	25	275	**2.36**	other disposal	400	0

4.2.2 Hinterland Use of Phosphorus

‘Hinterland Use of Phosphorus’ is defined as the total amount of P-rock (P-concentrates) used outside of a country to produce the goods imported into that country. It is represented in

Figure 4.32 with the good named ‘P-rock’, which is the product of mining and beneficiation, and the raw material for further processing. Phosphorus enters the regional metabolism both in the form of raw material (phosphate rock), which is used for the production of P-including goods, and in the form of P-including goods themselves. The good referred to as P-rock in the economy involves P-concentrates (27-38 % P_2O_5) produced from the ore. Beside these P-concentrates imported goods including P are categorised in this study as fertilizer, food, fodder and ‘others’, like chemicals**.**

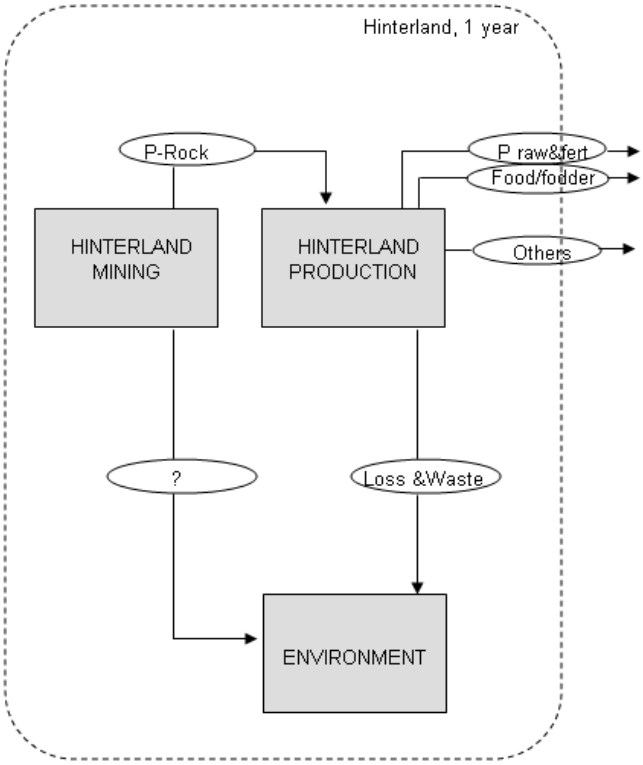

Figure 4.32. MFA Representation of the P-rock use in the Hinterland

A comparison to the well-known indicators like Total Material Requirement (TMR) and Hidden Flows (HF- The Ecological Rucksack) of the Wuppertal School is necessary at this point (Bringezu et al., 2003). Firstly, Bringezu et al. carry out their material flow analysis in a collective way at the goods-level. They estimate the total mass of all the goods used by a national economy, together with their “ecological rucksack”. The latter refers to the hidden flows, which are not registered, because of not having a price or being not traded; “total quantity (in kg) of natural material moved (physically displaced) by humans in order to generate a good.” They neither exist in economic analyses nor in those MFA works based on

conventional statistics. TMR, per definition covers all the goods used (domestic + import) directly together with their hidden flows. The hinterland consumption of phosphorus in this work can be seen as an allusion to the Total Material Requirement of Bringezu et al., in the sense that it not only includes the directly imported amount, but also its ecological rucksack (the hidden flows involved in their production). Yet, in this work, material flows are calculated at a substance level. Beside the level of aggregation, another difference is that TMR also involves inland hidden flows. In this work, the inland hidden flows not accounted for in statistics (like erosion, manure, losses, soil accumulation) could be estimated in the regional MFA analysis part. Therefore, they are not hidden and do not relate in any way to the hinterland approach used here. Again contrary to the TMR, inland mining of the resource - P drawn from the own soil stock, in this case- is not included in the parameter defined here. The hinterland consumption calculated here involves all imports and their hidden flows, expressed as the P-rock consumed to produce them. A major difference of the approach used here lies in its purpose: It is not intended to determine a general environmental change, or overall material use of a society, but it is aimed to show a region's share in the global P-resource use, as well as the potential of P pollution created in its hinterland.

The production from the raw material takes place in three steps with the order of the goods: Geological rock, ore, P-concentrates and P-goods. In calculating the hinterland P-concentrates consumption to produce the imported goods, one backward step is made in the production line. The two steps earlier involving 'concentrates to ore (Erz)' and 'ore to geological rock (Gestein)' are not estimated. Whereas Bringezu et al. go to the origins of the resources, i.e. to the point where they were taken from the environment, in this work, the hinterland mining process is not balanced (Figure 4.32; Hinterland mining). This has several reasons: The amounts involved in mining (topsoil, overburden), while they may be relevant as mass and certainly relevant for aggregated material flows, are of lesser relevance in terms of substance flows. In particular, phosphorus mining causes much more important environmental threats with substances other than P, and the analysis in this work is limited to P. Secondly, the variability of ore qualities and the uncertainty of the losses and wastes in mining activities prevent estimating P losses from the process 'Hinterland mining' to the environment. An example from the USA shows this: The reserves in Florida have an average grade of 10 $\%P_2O_5$, while those in North Carolina average 24.5% (Adriaanse et al., 1998). The same study takes the ratio of overburden to ore (mass ratio) to be 1 in Florida and 4 in North Carolina. Naturally, the amount of P in overburden has an uncertainty, which involves those

uncertainties both in the grade and the overburden amount. Variability and the resulting uncertainty in the P-content of mining residues are huge. Estimating additionally how much is getting lost and cause changes in the geogenic background (which is mostly in a group of exporting countries and not a single one) with general transfer coefficients seems unreasonable by the means of this study. Additionally, this work is interested in the effects of the regional consumption in the hinterland without accounting for the country or mine of origin and the specific environmental hazard to it.

Substance flow analysis enables pointing at an environmental problem, which the studied substance poses. The environmental effect of P is known quite well, for instance the problem caused by P emissions when they enter the water bodies. What is rather uncertain is the amount of the P-movement to water bodies per unit of time in many anthropogenic activities because of the non-point sources. How much P enters the environment, or in particular the water bodies from mining activities, is unknown. Similarly, available techniques do not allow estimating the erosion and other diffuse P-emissions in the hinterland. This explains why the system hinterland was not detailed further. First transfer coefficients for the production of the imported goods in the hinterland are determined and then these are used to estimate the P-rock consumption. The balance of the hinterland production process is assumed to be the 'loss and waste', which is directed to the process environment, without further specifying which compartment.

Transfer Coefficients (TC) for the Hinterland

In order to calculate the P-rock use for the production of the imported goods, transfer coefficients are needed. These depend largely on factors like the input quality or used technology in the exporting country. Therefore, the estimation below is done in a rough fashion.

The transfer coefficient of the fertilizer and P-chemicals production processes are estimated as follows: Data on 'P-rock import' and 'P fertilizer production' are compared to gain some insight from the MFA system[*] designed. The ratio (P-fertilizer production / import rock) is found to be at least 0.85 and 0.95 for Turkey and Austria respectively, assuming that all P imported enters fertilizer production (Turkey import: 134-164 kt P, production: 140 kt P;

[*] In the MFA, the amounts leaving the ITCT process represent "fertilizer consumption" rather than production amounts, as ITCT involves not only the P-fertilizer industry, but also the distribution of the goods. Here, the production data is used.

Austria import: 24-34 kt P, production: 32.5 kt P, data (FAO, 2004)). A TC of 0.90 will be used hereafter as the TC from P-rock to the goods ‘P-raw and fertilizer’, and ‘Others’. This means that 10 % P-loss is assumed in the production of these goods. Lately, there has been a tendency towards importing finished products, like phosphoric acid or fertilizers rather than phosphate rock. On the side of developed importing countries, this is because of the hazardous by-product of phosphate production, phosphogypsum, leading to additional environmental cost. On the side of exporting countries this is because of the added value to the exported good, i.e. it can increase their profit.

A common transfer coefficient can be used also for the food and fodder products: The transfer coefficient in the agricultural production is the ratio of the agricultural products and the input to the system agriculture. Similar coefficients, usually referred to as the ‘efficiency in agriculture’, or ‘food conversion efficiency’ (for the animal production) are given in various works. Animal production usually has transfer coefficients between 0.20-0.30 ((Brunner et al., 1990), (Sibbesen and Runge-Metzger, 1995), (Zessner et al., 1997),(Saporito and Lanyon, 2004)). This decreases the overall agricultural efficiency, together with the use of plant products predominantly as fodder (plant + animal production). Isermann puts forward in their model (Isermann and Isermann, 1994) that the P efficiency of German agriculture (plant production + animal production) was 0.58 between 1990-1992. Here, 82% of plant-P produced went to animal production as fodder. According to (Frede and Bach, 2003) in Germany the overall efficiency was 0.65 and 68 % of the plant produce was used as fodder as of 2000. The overall P-efficiency of agriculture can be as low as 0.2-0.3 like in the UK in 1993, where 95 % of P in plants produced served as fodder, and only 5 % went to human consumption (Withers et al., 2001): In this case, agriculture as a whole is practically composed of animal production. Agricultural production had P-transfer coefficients of 0.50-0.55 according to von Steiger (Steiger and Baccini, 1990) based on direct measurements on farms having various operations. Köchl balanced the P flows for the Austrian agriculture in 1994 (Köchl, 1995) and came up with 0.53.

Based on the MFA constructed in Chapter 4.1 the TC in agricultural production for Turkey and Austria can be determined. Here, TC in agricultural production is the ratio of the P in agricultural products (animal products + plant products) leaving the system agriculture and the P entering the system agriculture with inputs (fertilizer + imported fodder). The TC for Austria is found to be 0.60 with 70 % of the inland plant products used as fodder (Section 4.1,

Agriculture). The recent reduction in fertilizer use (lower input than before) is one reason for TC to be relatively high in Austria. The one for Turkey is found to be 0.56 using 33 % of its plant products as fodder. Turkey has a much less intensive animal agriculture, but TC is almost the same as in Austria due to low productivity in Turkish agriculture and the practice of burning manure. The coefficient could be easily higher considering the modest application of fertilizer and direct consumption of plant products by humans. Agricultural soils in Turkey are not enriched enough with P and the productivity is much lower when compared to European countries (output at 'good' level is simply low). Another major source of P-inefficiency is the manure lost from the agricultural system, which is a straightforward loss of the substance.

To determine the hinterland P consumption for the agricultural production of the food and fodder imported, the TC is assumed to be 0.60 based on the inland TCs of Turkey and Austria. The sum of the averages of the P-flows (food and fodder imports) is divided by the coefficient, to find the hinterland input for the production of these goods (Table 4.37).

Table 4.37. Calculation of the Hinterland Consumption of P

g P / cap*a	TC	Imported P in goods		P used in their production	
		Turkey	Austria	Turkey	Austria
P raw and fertilizer	0.9	3500	4700	3900	5200
Fodder and food	0.6	250	1800	400	3000
Other goods	0.9	350	1400	400	1600
Sum		4100	7900	4700	9800

The results above are shown also in Figures 4.34 a and b. Here, flows entering the region from the surrounding system represent imports to the studied regions. Hinterland activity is summarised with two processes as follows: The first process to the left, the 'hinterland mining' involves a range of activities in the P-rock exporting countries, from mining the rock to producing the concentrates. In the second process, the 'hinterland production', the raw material is partly further processed and partly distributed directly to the region under study. As mentioned before, the balance of the process hinterland production is directly sent to the process environment. This process involves all environmental compartments plus man-made disposal units. The flow points only at a potential and the fate of the phosphorus is not further studied. Next, the hinterland systems will be embedded into the proxy system defined below.

4.2.3 A System for Management

For the purposes of this evaluation, a management model (The Proxy System) is designed here. This Proxy System is used to measure and monitor the P-management performance of a country with respect to depletion and pollution potentials created. It widens the scope of analysis for the evaluation: Stocks of the region are highlighted, upstream hinterland processes are incorporated. (See Methodology for further explanation)

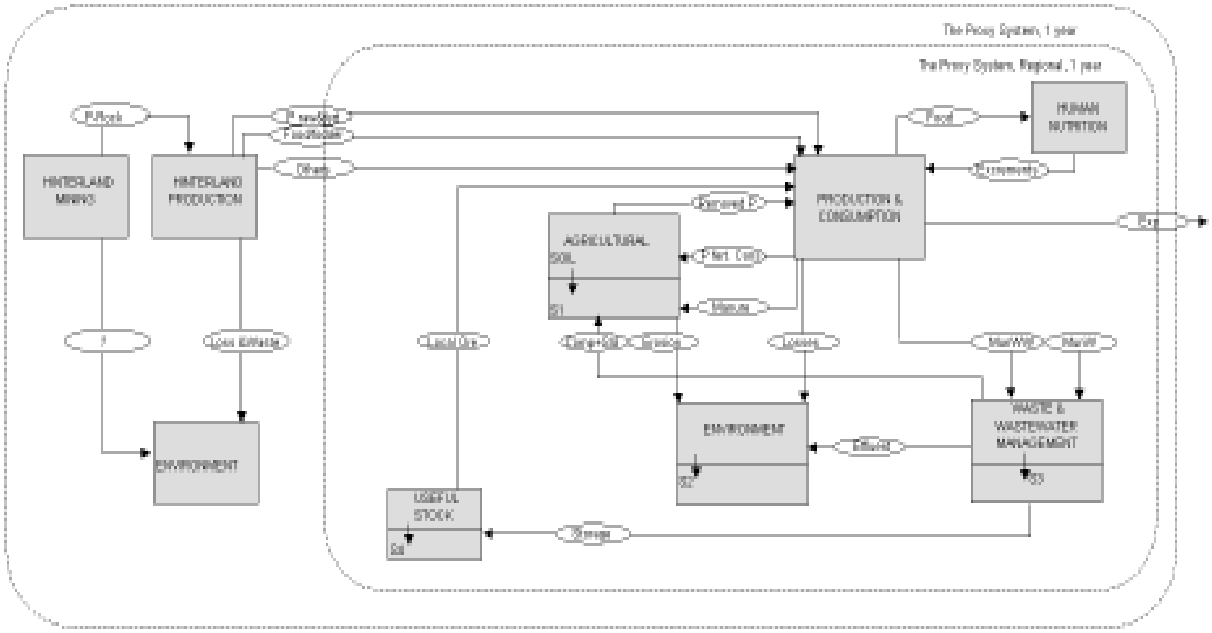

Figure 4.33. Definition of the proxy system designed for the national P-management

4.4.3.1. Processes and Goods

The national MFA is expanded to involve hinterland processes as explained under Section 4.2.2. Figure 4.33 shows processes in the region to be managed, like the agricultural soil, nutrition, waste management, and the useful stock. Hinterland represents all regions where P is taken from the environment and/or processed into goods and exported to the region under study.

As pointed out in the Goals and Principles of P-management, it is necessary to keep the agricultural soil balanced in order to prevent soil mining and accumulation. In order to be able to control agricultural soil quality concerning P, this process is not embedded into the process called ‘environment’. Also, plant production should be treated as a separate unit. Therefore,

the agricultural soil is represented as a process on its own and not under the production and consumption. It is the process analysed in detail before (Chapter 4.1; see Figure 4.9) and includes the pasture area as well. P enters the process in fertilizer, manure, sludge and compost; it leaves the process through erosion losses and 'Removed P' in plants from the soil as explained in Section 4.1.

The process 'production and consumption' is a collective process involving a whole range of production and consumption activities, from animal production, to trade, commerce, distribution, tourism, and even the household detergent consumption. All processes using goods from imports and the inland production, and producing wastes and losses which should be managed are unified under this process. The process also produces all exports and the food intake of households. Nutrients leaving the process in fertilizer or manure go to the agricultural soil. Infrastructure and the transportation in the region are also included in this process. Exceptions are the managed waste and wastewater: Waste and wastewater collection systems are considered under the process waste and wastewater management. The input to this process and the turnover indicate the level of productivity and technology reflecting the life-style of the region more than other processes. The advantage of defining the 'production and consumption' as a black box saves the crowd of many industrial flows and the unknown flows, thereby making the system more traceable and highlighting only those flows which are relevant to the goals of P-management.

Human nutrition is the target process in the management system. It stands as an independent process, because the turnover of this process is the base of the indicators defined below. It is a transformation process involving the digestion of the food ready to consume, and returning the excreta, assuming a steady state in human biomass.

Process 'environment' represents all receiving bodies for the losses and effluents coming from the rest of the anthroposphere. Air, soil, water surfaces and every environmental compartment are included in this process. As stated before, the potential pollution is measured in this study, and as defined, this potential covers not only to the amount directly entering water bodies, but all P losses and effluents to the environment. In the region, agricultural soil and landfills are defined separately and excluded from the process environment, because they are relevant to the goals of the regional P management. (This is valid only for the region- the

local environment- and not the hinterland. In the hinterland, process ‘environment’ is the global environment involving all compartments such as landfills and dumps).

Waste and wastewater management involves the collection and the treatment of the wastes and wastewater and the final disposal of the resulting goods.

The regional stocks of Turkey and Austria are estimated in Section 4.1.8. The process ‘Useful Stock’ introduced in this chapter represents the medium or a low grade P stock of the region. Stocks can be geological deposits or man-made final sinks for P, which offer a potentially useful source for the future. Grade and quality are feasible to extract. Currently in Turkey, 15 % P_2O_5 (= 6.5 % P) and 0.70 m. are accepted as the minimum economic grade and the minimum economic thickness (SPO, 2001b). Mines having these properties are called ‘reserve’ meaning economic resources, feasible with today’s technology. Those below 15% P_2O_5 and 0.70 m. level are called reserve base. Other reserve characteristics exist that determine if a mine is feasible or not. The theory of resource economics concentrates mostly on the size of the stock. (Marvasti, 1996) claims however, that grade and other characteristics like ore/product ratio, water availability, price of capital, can be as important as the reserve size. As explained under Goals and Principles, in this study grade is accepted as the criterion determining useful stock. The mass (size) criterion is implicit in the MFA approach, which only involves relevant flows and stocks. In other words, a simplification is made here and the ‘usefulness’ of the stock is judged entirely by its grade.

Apart from the existing useful stock, useful stock generation is investigated as well. Useful stock is indicated with S_4 in the Figure 4.33, and S_4^+ stands for stock generation. Each will be studied at two ranges of grade: Those having ≥ 5% as P and those having 1-4% P. The former shows the currently useful stock and the latter the amount, which will be useful in the future. Phosphate industry is already developing technologies for such low-grade ores. There is no intentional stock generation so far, although concentration of the P takes place in some waste treatment operations. In scenarios, ashes from waste management enter the useful stock. This is because materials can be stored in this inert, compact form, and because P-rich ashes are already generated in the system by burning/incinerating manure, bones, sewage sludge,…

4.4.3.2. Quantified Proxy System

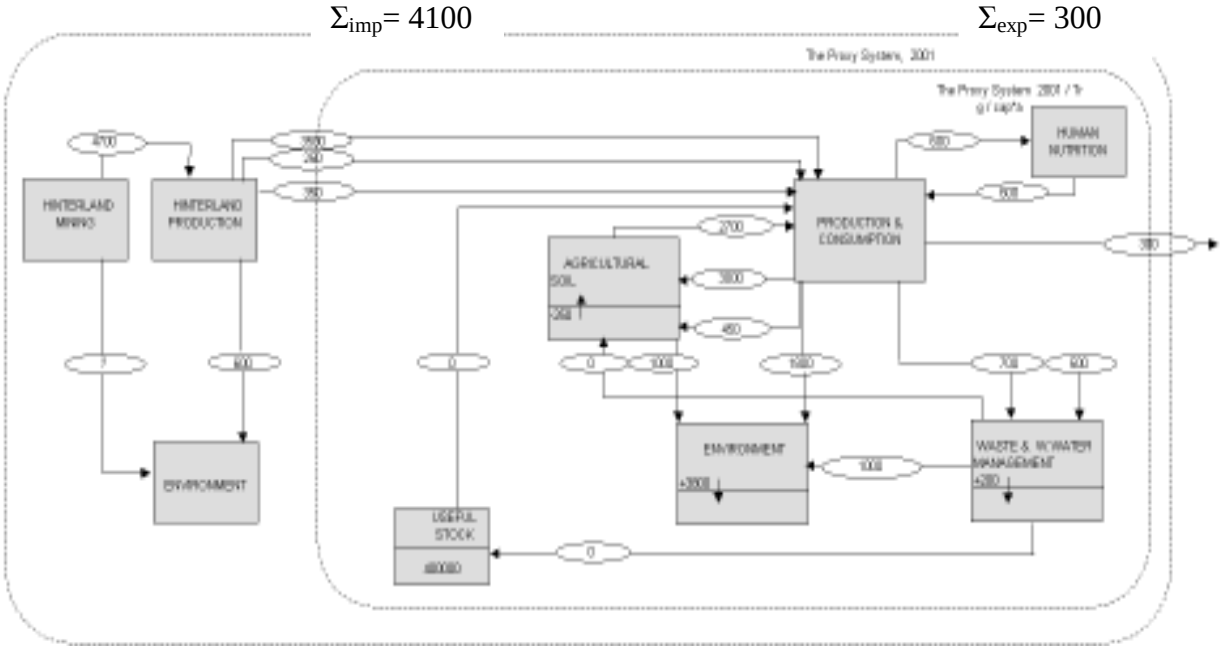

Figure 4.34.a. The Proxy System for the Management of P flows, quantified for Turkey

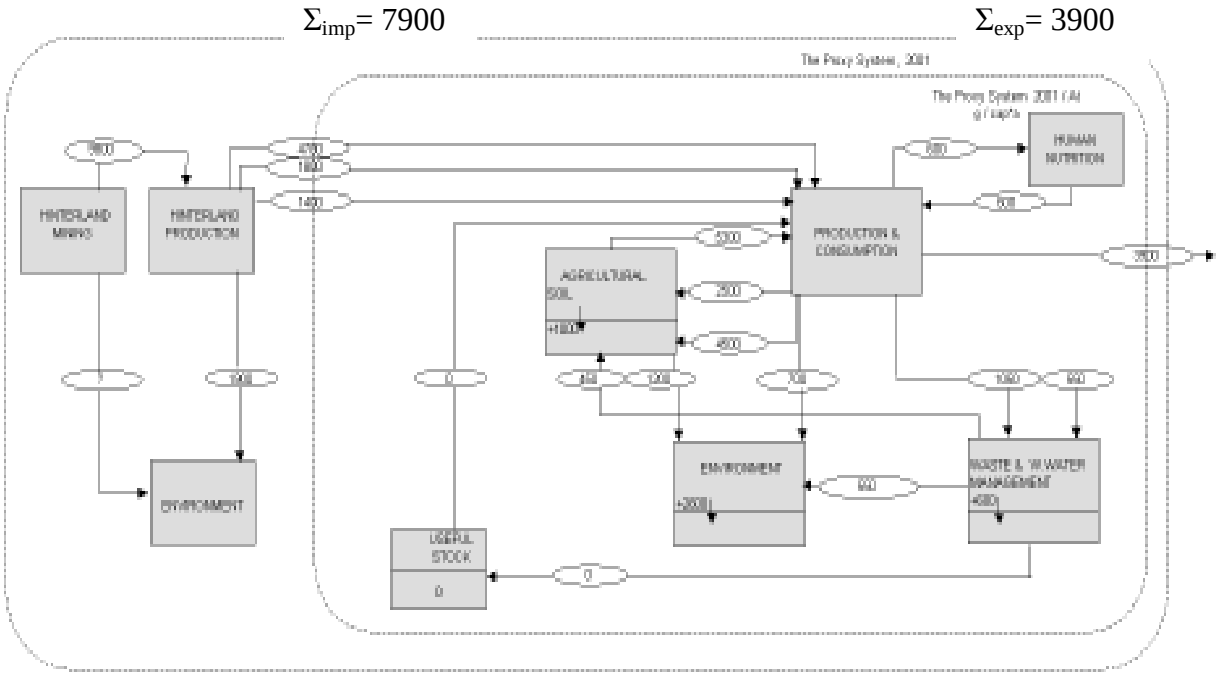

Figure 4.34.b. The Proxy System for the Management of P flows, quantified for Austria

Based on the given design both systems are quantified. Losses and stocks from / in the process hinterland mining are not determined, because of the reasons explained under 'Hinterland Use of P'.

4.2.4 Measurement of the Management Performance: Indicators

To evaluate and compare one management scheme against another, indicators are used in this part. They represent the pollution and the depletion potential of a region, thus called 'environmental protection' and 'resource conservation' indicators respectively. Below, all indicators are defined with the flow names given in Figure 4.33 (See the Methodology for the indicator definitions with flow numbers).

4.2.4.1. Indicators for Environmental Protection

I_1. Inland losses (Potential of P-pollution in the country)

The amount of losses to the local environment per dietary P consumed is used as an indicator for the existing P pollution potential generated by a society while feeding its population.

Represented by the Ratio: (Erosion + Losses + Effluent) / (Food)

I_2. Agricultural Soil Accumulation (Future P-pollution potential created today)

If P is accumulated in the soil, a potential for future P pollution is also being created. This is expressed here as an indicator per dietary P consumed.

Represented by the Ratio: (S_1^+) / (Food)

I_3. Hinterland Losses (P-pollution potential created in the hinterland)

Shifting the production abroad and importing readily produced goods cause also existing and future environmental pollution potential in the Hinterland. The losses and wastes created in the hinterland production processes are indicated here.

Represented by the Ratio: (Loss & Waste) / (Food)

4.2.4.2. Indicators for Conservation

I_4. Primary Resource use (Share in the global resource consumption)

Consumption of the P-rock directly inland and in the hinterland to produce the imported goods shows the share of that country in the global P-rock consumption.

Represented by the Ratio: (P-Rock) / (Food)

I_5. Phosphorus Dispersion (P scattered and diluted in the environment)

All P in wastes and losses of the region not entering the useful stock is considered dispersed. This is an indicator for the dilution potential in the overall system. It involves all flows, which get diluted unnecessarily on their way through the anthroposphere or otherwise which are disposed of/lost as they are, without undergoing any treatment.

Represented by the Ratio: [(S_1^+ + Erosion + Losses + Mun W + Mun Ww) - Storage] / (Food)

I_6. Storing P (Useful stock generation)

This number can represent saving P from secondary resources for future generations. It shows the n years of P-supply created in one year by saving the concentrated P based on today's agricultural P-demand.

a- Those products having ≥ 5 % P concentrations (The mine grade of today)

b- Those having P concentrations 1-4 % (Useful in the future?)

Represented by the Ratio: (S_4^+) / (Removed P)

I_7. Self-sufficiency (Lifetime of the inland useful stock)

The existing useful stock divided by the agricultural demand (assumed to be as much as the plant P removal, i.e. 'Removed P'), at two levels:

a- Those stocks having ≥ 5 % P concentrations (The mined grade of today)

b- Those having P concentrations 1-4 % (Useful in the future?)

Represented by the Ratio: (Useful Stock) / (Removed P)

4.2.5 Status Quo Comparison and the Indicated Management Need

The indicators defined are used in this part to compare the current performance of the two regions, and to 'diagnose' the management need for P. They are calculated with the formulae above and the results are shown in Table 4.38 below. The calculation of the 'period of self-sufficiency' (I_{7a} and I_{7b}) requires first the estimation of both currently and potentially useful stock in the region, which is done below.

<u>Regional Useful Stock</u>

The geological P stocks of Turkey were already calculated to be around 400 kg P/cap in Section 4.1.8 and shown in Figure 4.34.a above. This was derived from a reserve of 340 Mio t

having an average grade of roughly 5% P (estimated weighted average). According to the useful stock definition above, which is only based on the grade, this is the currently useful stock of the county. In Turkey, at the moment these reserves are not being exploited.[1] Putting aside the economic factors, the mine itself proves to be useful due to its high grade. According to (SPO, 2001b), Turkey has a reserve base of around 500 Mio t. A comparison of the grades and stocks shows that beside the 340 Mio t currently useful stocks, some 100 Mio t potentially useful stock (1-4 % P) has been discovered in Turkey. It must be noted, that the real amount of this potential useful stock anywhere can be highly uncertain, as the grade is low. By the nature of resource economics, explorations at a certain grade level are made only after this grade proves to be 'currently' useful. 100 Mio t with assumed average 2% P content yields 2 Mio t P which equals 25-30 kg P/cap for Turkey, a small amount when compared to 400 kg P/cap currently useful stock. Because of the low grade, the period of self-sufficiency caused by the potentially useful stock is quite short and unimportant: Dividing the potentially useful stock by the 'Removed P' (see definition I_7) yields only additional 10 years of potential useful stock or reserve base (I_{7b}), much less than the 140 years of currently useful stock lifetime (I_{7a}), as shown in Table 4.38.

Indicators and the Management Need

The defined indicators are calculated for the Status Quo based on the management model in Figure 4.34 and the values tabulated below in Table 4.38.

The first indicator shows, that the inland losses are five to six-fold of the dietary consumption, showing the inefficiency in production and a lack of proper waste / wastewater management. Inland losses involve only the direct losses to the environment and are higher in Turkey. This is because of the lack of ubiquitous waste and wastewater management beside the inefficiencies in the animal agriculture and losses of industry. On the other hand, losses in Austria are not low either. The better waste/wastewater management in this case provides a 25% reduction in the total losses to the whole environment when compared to Turkey. As P is not a parameter of high toxicity in the environment, areas sensitive to eutrophication are exclusively protected in a targeted way. Still, it is known today that diffuse pollution, which is difficult to control, may cast shade upon the environmental protection efforts concentrated on

[1] This also shows, that grade is in reality not the only determinant for a reserve to be extracted or not. Many other factors in a national economy or on reserve characteristics may play a role. In case of Turkey, around 75 Mio t of the stock is already studied and registered as reserve. One pilot and one big scale trials were done with this reserve, but the project was given up in late 1980`s.

point sources. If losses of P could be reduced by efficient use of resources and by collecting and managing waste and wastewater, diffuse and long-term pollution potential could be reduced as well.

Table 4.38. P-management Indicators for the Status Quo

Indicator	Turkey	Austria
I_1: Inland losses	6.1	4.5
I_2: Soil accumulation	-0.4	1.8
I_3: Hinterland losses	0.9	3.5
I_4: P-rock use	7.6	17.6
I_5: Dispersion	6.8	8.3
I_{6a}: Storage, medium grade	0	0
I_{6b}: Storage, low grade	0	0
I_{7a}: Stock, medium grade	140	0
I_{7b}: Stock, low grade	10	?

The second indicator shows how big the threat of diffuse P pollution will be in the future. The agricultural soil in Turkey has a negative balance, whereas that in Austria has a positive one. It is difficult to average the agricultural soil balance over a whole country. I_2 is an indicator showing the tendency in Austria towards accumulating P in the agricultural soil, even after reducing fertilizer applications considerably. In Turkey, leaving the uneven distribution aside, average soil balance is negative, also due to the bad manure management. Agricultural soils should be managed to prevent both positive and negative balances of P.

I_3 is about the contribution of the importing country to the hinterland P-losses. This time losses represent the hidden flow in hinterland production and here the losses of Austria are higher. Austria causes four times as much loss in hinterland processing of the P-rock into goods imported, than Turkey does per dietary P consumed. This is because goods are imported at higher levels for example food and fodder. Turkey causes hinterland pollution as well, but the goods imported, mainly P raw material and fertilizers, are less processed when compared to the imports of Austria. Agricultural processing brings added value to the goods shifting more pollution to the exporting country. This pollution can be reduced either by importing the raw material necessary for the production of consumption goods, i.e. internalising the hinterland production, or by reducing the consumption.

The first resource conservation indicator, I_4, shows how much virgin ore is drawn actually per dietary consumption from the global phosphate reserves for the production and consumption in the country. When compared to I_1 and I_3, 80% of the overall P-rock use ends up in inland losses, 12% in hinterland losses in Turkey, which is 25% and 20% in Austria respectively. This is due to the Austrian P-rock use in the hinterland being twice as high as the one of Turkey and the high exports from this country. This amount does not indicate the direct consumption and exports of the country are not deduced from this amount, i.e. not the net import of a country, but the total import is indicated. Austria exports more than 10 times as much P per capita as Turkey. Imports of finished goods like food and fodder and the high exports of P-fertilizers sum up to an elevated actual raw material consumption. If P gets scarce in the future causing problems in feeding the population, these uses could inevitably be reduced.

Dispersion losses, indicated by I_5, are also an indirect measure of resource depletion. This time the indication of the depletion potential is not based on the amount drawn from the reserves, but on the regional management of the P flows. In the anthropogenic metabolism, there are flows whose P-concentration is reduced on their way down to the background levels. These flows are represented by the fifth indicator. I_5 can be reduced lowering the pace of depletion by management decisions. This would lead to the utilisation of secondary resources having concentrated P and to the reduction of losses and surpluses.

I_6 represents the secondary resource stock generation of the region. This flow is generated in waste management in the form of ashes to provide a stable storage with the properties of an ultimate sink. Furthermore, P-rich ashes constitute a secondary resource for P consumption. Currently, there is no such stock generation in either country. The possibility of and the potential for direct recycling are discussed in scenarios. The useful stock generation indicator, as well as its use in scenarios was necessary for testing long-term management strategies and the hypothesis on storing the high grade P for future use.

The period of self-sufficiency is the quotient between existing useful stock and agricultural turnover. Turkey features a period of self-sufficiency from its inland P resource of 140 years at current consumption levels (I_{7a}). This period depends on various factors and therefore changes from scenario to scenario. Still, it shows that the country does not undergo a high risk

with the current 100% import dependency on the resource. Austria does not have any noteworthy phosphate deposits

4.2.6 Scenarios and the Long-term Management

Long-term management plans for a resource depend primarily on future resource availability, in other words the depletion of the existing resource stock. Therefore, foresight or predictions on this availability is needed. However, as explained in the introduction part of this study, it is not yet possible to know when the humanity will run out of P resources.

In this part, management strategies for different scenarios are developed. The scenarios show future possibilities regarding primary resource availability. The three scenarios are called 'Never-ending P', 'Hotelling was right' and 'Soil Mining' (see Figure 4.35 and 4.36). In the first scenario, explorations and production technologies regularly increase the reserve base so that P is never depleted in the economic sense. The second scenario follows the Hotelling model on non-renewable resources: Resource rent increases with the interest rate, so that the extracted amounts decrease. This decrease is reflected to the imports of the country. T_1 marks the point where the agricultural output is reduced to the subsistence level, due to the reduced inputs (keeping the soil P balanced). The third scenario represents a period, where imports are reduced to levels causing soil mining to feed the population.

Under each scenario, solutions are suggested constituting a set of management decisions which are run and depicted on the proxy system. In the first scenario, losses and wastes are managed and the hinterland pollution is reduced. This 'experiment' shows the potential for secondary resources in the region, beside the possible reduction in hinterland losses, without changing today's consumption level. In the second scenario, primary resource scarcity, and so, the decreasing import over time is responded in the region by reducing losses and conserving the resource. This scenario shows amongst other things how the secondary resource amounts are dependant on the amounts of the primary resource consumed. In this scenario, useful stocks of P are built up in the region and then consumed. Management tries to shift T_1 as far into the future as possible. In the third scenario (or period) the self-sufficiency of the region is questioned when neither imports nor regional useful stocks are there to support the production. The possibility of sustaining the population is discussed under such circumstances.

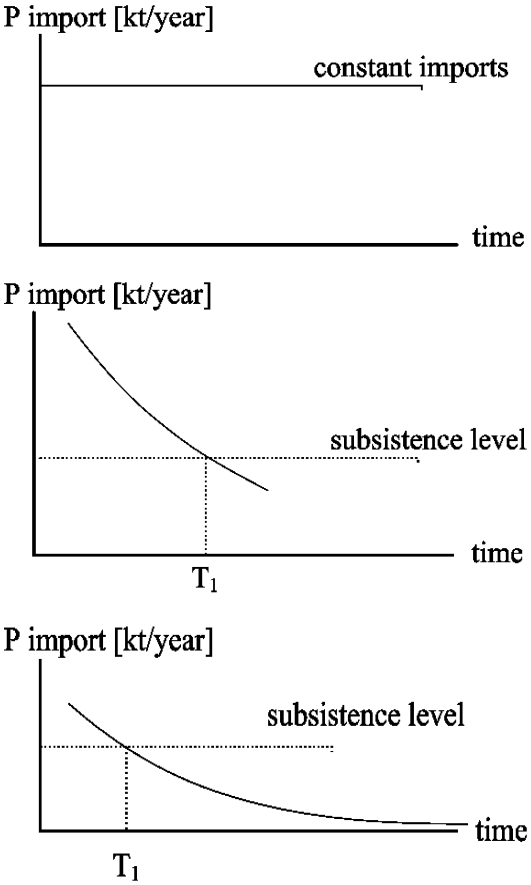

Figure 4.35. Primary P resource import to the region over time in each of the 3 scenarios.

The three periods can be seen as three consecutive periods as well, like in Figure 4.36. In this case, the management in each period would have an effect on the next period.

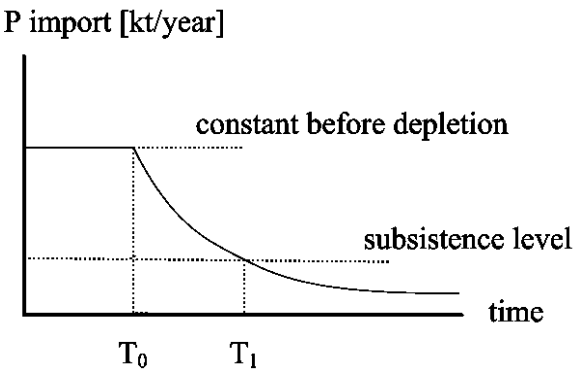

Figure 4.36. Scenarios following each other as 3 consecutive periods

4.2.6.1. Scenario 1: Never-ending P

Scenario 1 assumes that P will never be depleted. This can be due to new useful primary resource stocks being endlessly discovered or technologies being developed which extract lowest concentrations of P without devastating the environment. As P is an essential non-renewable resource with no substitute, and considering the increase in consumption and global population, this does not seem plausible in the long run. Still, a scenario based on unlimited P-resources helps understanding the system behaviour.

In such a case, management aims to control the effects of P as a pollutant both in the managed region and in the hinterland. Pollution caused by today's emissions and pollution potential created for the future must be reduced. The proxy system above shows that 3-4 kg P is uncontrolled and released to the environment (excess to the agricultural soil and to the process 'environment'). Of this amount, at least ¼ or 1/6 directly enters the water bodies and the rest after a delay. This means that each person causes a direct P discharge of 50-100 kg into water bodies in his/her life-time and generate 5-fold of this amount as a potential for pollution in order to maintain the <1 kg P in the own body. With the ever increasing population, this poses an increasing thread to water bodies unless it is controlled.

In Scenario 1 the resource is unlimited. Management aims environmental protection and suggests treating all wastewater to curb its polluting effects on surface waters. The rest of the losses and wastes are to be brought to final storage quality and disposed of. In the proxy system they are sent to the waste management process. Consumption patterns remain the same in the front end. However, high level P-goods (processed into food, fodder, etc) are no more imported but produced inland where losses and wastes are controlled, thereby reducing the hinterland pollution.

The following management decisions summarise the environmental protection strategy[2]:

1. Reduce the erosion (*30*). (The reduction in erosion is chosen arbitrarily to be 50% in all scenarios.)
2. Internalise the hinterland production (*2+3+4*) to reduce the hinterland losses. Produce all food, fodder and "other goods" domestically instead of importing part of it. Instead of the goods themselves, import corresponding amounts of raw materials.

[2] Flow numbers are shown in italics, and a prime (') is used to indicate the new flow after management.

Following adjustments are depicted in Appendix B as calculations: The additional P import due to producing the food and fodder (*2+3*) inland is not allowed to accumulate on agricultural soil, which is balanced for P (see Goals and Principles of P management). The minor additional P-loss this might create in production and consumption processes- like additional distribution losses in food and fodder industry- is omitted. The raw material needed to produce *4* in terms of P, here *4'*, was already calculated in Table 5.1. Additional pollution caused by producing the "other goods" (*4'- 4*) inland must be treated in domestic waste and wastewater management. This additional amount created due to the internalisation is added to municipal industrial wastewater (in *9'*) and sent to the wastewater management.

3. Collect all municipal wastewater including losses from households (*26*) and losses from the collection system (*24*) into the sewer. Treat all collected wastewater for P (85% efficiency). The cesspit portions (*17*) remain the same- bring the rests of the cesspit to final storage quality and store. Collect all wastes and sludges and send them to the waste management.
4. Control cesspit residues (*17'*) and ITCT wastes and losses and send them to waste management along with household and industrial wastes (*5* and *7*) in final storage quality. Send all waste and sludge to waste management
5. Balance the agricultural soil by adjusting the amount of mineral fertilizer (*13'*) addition and preventing both accumulation and soil mining. Prevent sludge application on agricultural land (*12*). Manure to agricultural soil (*2.2*) is kept as it is in the original system.
6. Import the amount of P needed in raw form to satisfy these conditions (*1'*).

The calculation of the new flows with the flow numbers is depicted in the Appendix B.

The results of the first scenario are shown below on the Proxy System:

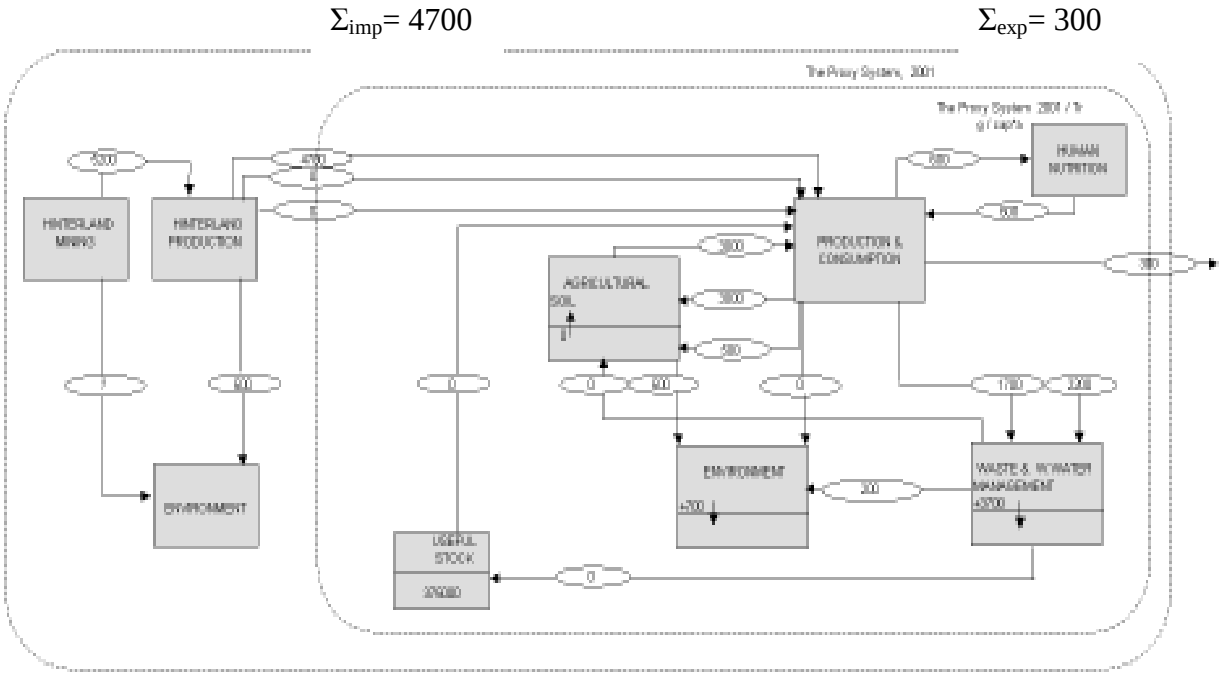

Figure 4.37.a. The Proxy System for Scenario 1, quantified for Turkey

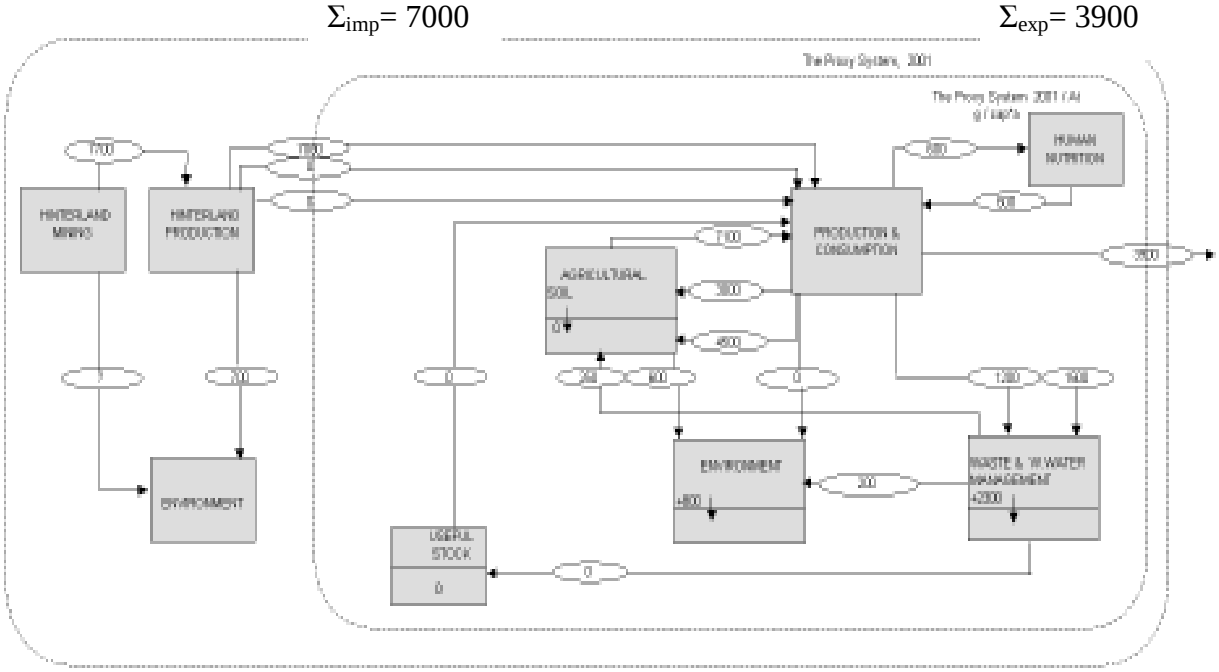

Figure 4.37.b. The Proxy System for Scenario 1, quantified for Austria

No loss at all is allowed in the system apart from erosion losses and wastewater treatment effluents after P-elimination. Therefore, most of the net import (Tr: 3900/4400; At: 2700/3100) ends up in waste and wastewater to be sent to final sinks. The full extent of wastes being higher in Turkey shows a higher inefficiency of use. The imported food and fodder (*2* and *3*) is produced in the region and thus equivalent amounts of P are added to the

originally harvested amount in calculations. Goods lumped together under 'Import Others' (*4*) are also produced by domestic industries. Instead of the goods, the necessary raw material is imported. The additional municipal wastewater due to the internalisation is managed (*9'*).

No sludge is applied to the soil (Compost and manure is applied at the same level as before). Soil accumulation is prevented to reduce future diffuse pollution. P added to and removed from agricultural soil is balanced by setting the mineral fertilizer amount (see Fig 5.4) equal to all output. Internalising the hinterland agricultural production in this way leads to an approximate expansion of the domestic agricultural sector by 10% (2.1 = 2700 and 2.1' = 2950) in Turkey and by 25% (2.1 =5300 and 2.1' =7100) in Austria, measured in terms of P removed from the agricultural soil. Manure P entering the agriculture is one tenth of the Austrian value. This scenario highlights the inefficiency of Turkish agriculture in harvesting P-including goods and the excessive losses in wastes and wastewaters even more than in the Status Quo system.

In this idealised waste management scenario, all wastewater is collected into the sewer system and all kinds of waste which contain P are collected and managed. In case of Turkey, the amount entering municipal wastewater management from households is more than doubled. All wastewater is treated for P with 85% efficiency. The P in the household wastewater is much higher in Turkey than in Austria due to the use of P in detergents. Under this scenario industrial wastewater contributes a considerable amount of P to sludge in Austria (from 470 to 950), especially after internalising the hinterland production and treating the wastewater under higher treatment efficiency. For the same reason of completed collection, P entering waste management in municipal wastes increases 4-fold in Turkey. This increase includes for example the collection of manure ashes and of the uncollected wastes. In this scenario the whole municipal household waste (*5*) is collected and managed, and involves also cesspit residues. The 'losses and wastes' from ITCT are sent to the waste management along with the industrial waste (*7*). The two flows *5'* and *7'* together with the sewage sludges (*6'*) from wastewater management (see Appendix B) are treated in waste management and disposed of in a final sink. This scenario shows maximum control of losses and wastes produced from the P-metabolism of both societies. P in currently managed wastes going to final disposal is already ¼ of this maximum in Austria and only 1/19 in Turkey. Reduction in hinterland losses is almost 65% in case of Austria just by converting the form of P imported from processed goods to raw material and producing the same supply inland. The scenario also shows, wastes

and losses managed even to an ideally full extent can not prevent 700-800 g/cap P every year from being lost in the regional environment. Even if 100 % recycling from wastes and ideal soil conditions (100 % availability of added P) would be achieved one day, this minimum loss of 700-800 g/cap P (30'+25') inherent to the system would deplete the phosphorus resource in the long-term.

Secondary Resource Potential

In a long-term, determining the raw material price will necessitate considering the environmental cost of mining. When all hidden flows and costs are internalised, raw material prices can increase in a way which renders secondary resources of P feasible to use even without the pressure of increasing scarcity. Regulations might also lead to recycling/recovery in order to reduce the throughput of P flows, or for the sake of decoupling the raw material use from the economic development.

Brunner studied the potential for P-recovery in the anthroposphere: If all food phosphorus consumed in households would be recycled, less than 10%, and if all municipal waste would be composted, only 1-2 % of P used in agriculture could be replaced (Brunner and Rechberger, 2004). In recycling, the priority should be given to the P in the wastewater, he concluded. An estimation of the secondary resource potential is made also here. Because conservation is not necessary under this scenario, useful stock generation with secondary resources is not involved in the management decisions above. It is a matter of primary resource use policy which would determine if the secondary resource potential is needed to be used or not. This issue is not further discussed in this study, still the maximum potential shall be estimated here:

- Municipal wastewater (household and industry) sludge

  This scenario showed the maximum potential in sludge (Flow 6': 950 gr/cap*a in Austria, 1250 gr/cap*a in Turkey- higher due to detergents), with all wastewater being collected and subjected to advanced treatment, producing P-rich sludge. There will always be cesspits beside the sewer system, and some leakage in the sewer will be inevitable. Based on these considerations, the possible contribution to the secondary resources is shown in Table 4.39.

- Manure ash

  Burning manure products in Turkey produces already 700 g/cap*a P in the form of highly concentrated ash. Proper incineration technologies could be adopted in both countries to

gain energy and reuse the ash for P recovery if some excess manure will be used in this way. Turkey has 1200 g/cap*a P in manure, while in Austria total manure-P amounts to 4500 g/ cap*a.

- Animal bone meal

Data on animal bone meal produced was not available. The estimation made here, for the purpose of this study, assumes the bone mass to be 8% of the GVE with 75% DM in bone and 10% P in DM. Around 5 kt P in Austria, and 13 kt in Turkey could be recovered from animal bones in this case.

Table 4.39. The 'useful' secondary resource potential available for recycling under Scenario 1

Source	Amount (gr/cap*a)	Concentration %P in ash
Sewage sludge	800-1200	10
Manure	500-1000	10
Animal bone meal	100-150	15
Sum Average	1800	10

In this case, putting aside the feasibility of such a recycling, a potential of 60% in Turkey and 25% in Austria can be reported. This number is based on the removed P from the agricultural soil under Scenario 1. The percentage is high in Turkey because: 1. The necessary P-removal from agriculture satisfying the diet is low and 2. The manure P shown in the above table as potential secondary resource is already removed from agriculture in Turkey and used as fuel biomass. Next, the management performance will be discussed using the indicators which are calculated on the new system and compared to the Status Quo indicators:

Table 4.40. P-management Indicators for the Scenario 1

Indicator	Status Quo		1st Scenario	
	Turkey	Austria	Turkey	Austria
I_1: Inland losses	6.1	4.5	1.2	1.4
I_2: Soil accumulation	-0.4	1.8	0	0
I_3: Hinterland losses	0.9	3.5	0.8	1.3
I_4: P-rock use	7.6	17.6	8.4	14.0
I_5: Dispersion	6.8	8.3	7.2	5.9

The inland losses are radically reduced in this scenario (see I_1) and converted to wastes, which are managed. Most of this wasted amount is however dissipative (see I_5) and little of it has secondary resource potential. On the other hand, inland losses are still 20-40% larger than the dietary consumption, even with the assumption of ideal waste management. I_2 represents the agricultural soil accumulation, which is prevented in this scenario by balancing the mineral fertilizer application and thus reducing the long-term diffuse pollution risk. The reduction in I_3 (>60% in Austria) is easily achievable without changing the consumption pattern but by internalising the production. In Turkey, the reduction is small because of the existing P-imports being mostly in raw material form.

The environmental protection policy involving the hinterland also changes the total P imports to the region and enhances the domestic agriculture. Balancing the agricultural soil for P without changing the consumption and internalising the production of imported goods already reduces the P depletion potential created by Austria (see I_4): Austria can import 1 kg/cap less with the same consumption pattern thereby reducing its hinterland losses by more than half. On the other hand, keeping the agricultural soil for the same consumption in balance, Turkey increases the current P depletion potential slightly (I_4 and I_5).

4.2.6.2. Scenario 2: Hotelling was right

This scenario studies the case of increasing resource scarcity: Global P-rock extraction as well as the amounts allocated to the region is decreased gradually over time. Increased scarcity restricts the input to the system and signals the necessity of resource conservation. Otherwise, in the future the system will be relying on the remaining little amounts of the valuable primary resource, which cannot support the productive agriculture and feed the whole society at the desired dietary level (as shown under Scenario 3).

Resource management aims at feeding the society with their dietary habits as long as possible, therefore using P efficiently, and saving goods rich in P (the secondary resources). In the regional metabolism, the reduction in imports is expected to be counterbalanced by the reductions in losses, in exports and ultimately the (agricultural) uses, over time. Diet is kept unchanged. Scenario 2 marks the end of the period $T_{1,}$ when the subsistence level is reached: This is the lowest amount harvested from the agricultural soil which can feed the population

without altering the diet, and at minimum losses. It is this period the management aims to prolong thus delaying the food scarcity.

Scenario 1 is the base scenario, i.e. the inland losses are already controlled and hinterland processing is at a minimum. The changes induced by the management decisions at the end of T1 are shown here as the final status of the system. Under the increasing scarcity of the resource, following changes are to be observed during T_1:

1. Losses reduced to zero at T_1
2. Exports reduced to zero at T_1
3. Reduced agricultural production to the subsistence level (*2.1”*) without changing the diet.

   Calculated as follows: Current dietary intake involves around 600 g of P per year, with animal products making up 20% in Turkey and 60% in Austria (Tables 4.18, 4.19).This means,

   Turkish Diet (600 g) = Plant food (480 g) + Animal food (120 g)

   Austrian Diet (600 g) = Plant food (240 g) + Animal food (360 g)

   and necessitates according amounts of P to be harvested from agricultural soil. Assuming the processing losses to be zero in plant products processing, and 50% in animal products processing, for the subsistence agriculture,

   TCpp (Plant products processing): 1

   TCap (Animal products processing): 0.5 (Status Quo: 0.4 in Tr, 0.3 in At)

   TCaa (Animal agriculture): 0.2

   the necessary agricultural production and the corresponding harvest from agricultural soil should be:

   Plant products (*18”*) = Plant food/ TCpp;

   Animal Products (*20”*) = Animal food/ TCap

   Removed P (*2.1”*) = *18* + (*20* / TCaa)
4. Return all manure to agricultural soil with the best management practice
5. Collect the reduced waste and wastewater, apply phosphorus treatment. Wastewater P comes from urine and faeces only, wastes mainly from animal products processing.
6. Collect all secondary resources, coming from sludge and treated wastes, send to the useful stock of the region (*29’’*). (Animal bone meal is assumed to be half of the animal related wastes (5”))

7. Determine the mineral fertilizer amount balancing the agricultural soil, and so determine the reduced import, the level of which brings about the above management scheme.

The calculation of the new flows is shown in the Appendix B with the flow numbers.

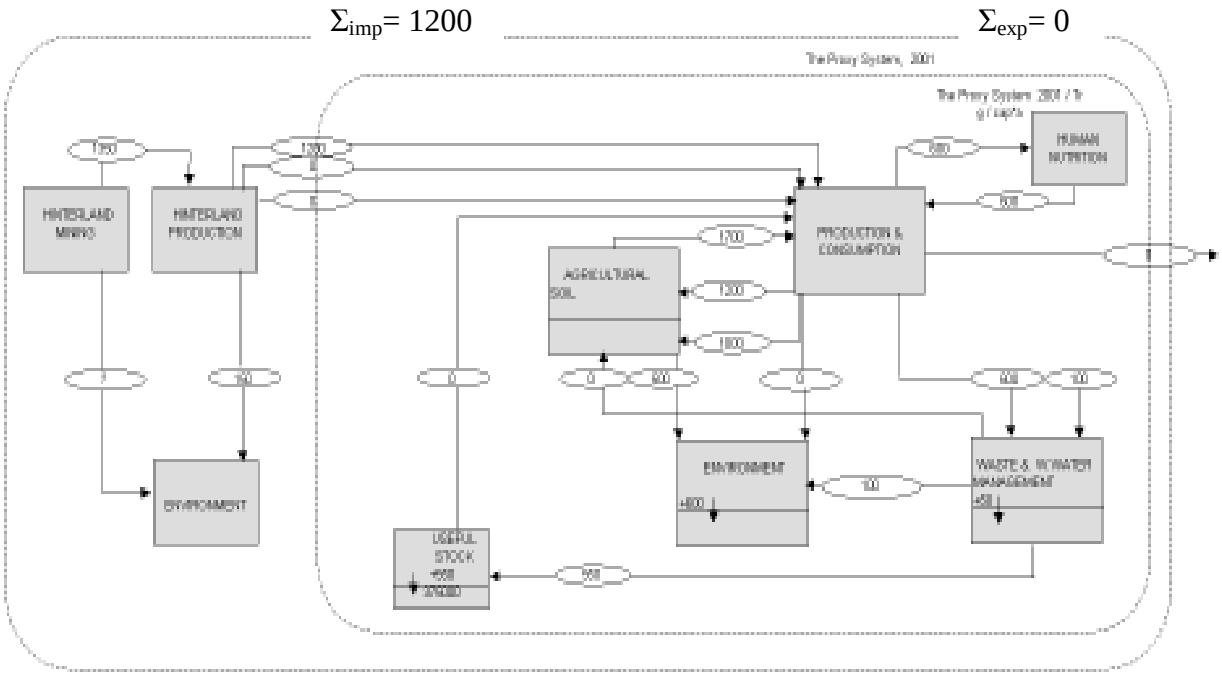

Figure 4.38.a. The Proxy System for Scenario 2, quantified for Turkey

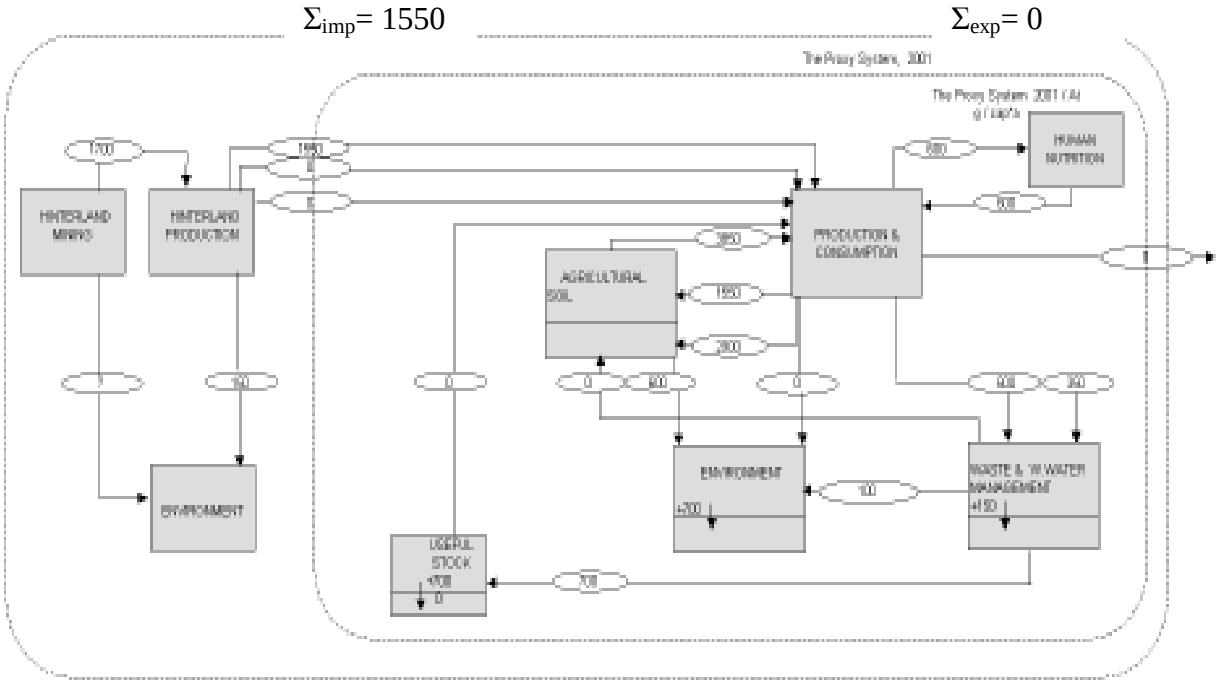

Figure 4.38.b. The Proxy System for Scenario 2, quantified for Austria

This scenario shows that consistent reductions in the P import to the regions would require consumption changes. Ultimately, the region would have to give up other uses of P apart from the dietary use. Exports and losses would cease during such a period. The scenario also shows, when the P-rock use falls to the ¼ (see Figure 4.38) of the P-rock required for today's consumption and the life-style (compare to Scenario 1, Fig 4.37), the society switches to the subsistence agriculture.

Secondary Resource Potential

This scenario also involves the generation of the useful stock by conserving the P-rich residues of certain wastes for future consumption. This flow is around the same size of dietary consumption in the subsistence scenario, but it is reduced to this level during T_1. The recoverable amounts in the first scenario were three-fold of the dietary consumption. Thus, it can be concluded that the recoverable amount of useful P is reduced from 1800 g P/cap*a to some 600-700 g P/cap*a at the end of T_1. The graph in Figure 4.39 represents this reduction with a linear approximation.

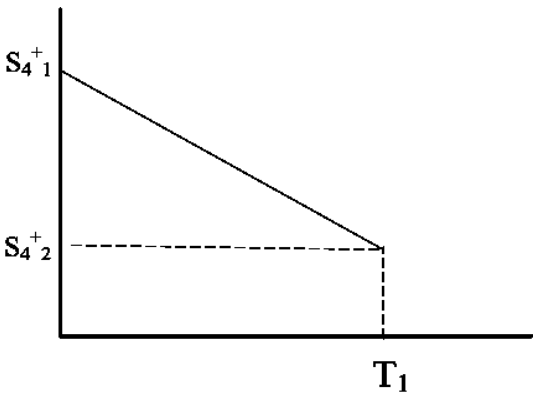

Figure 4.39. Useful stock generation during T_1 period of Scenario 2

The useful stock generation in Scenario 2 would produce,

$S_4^+{}_1$ = 1800 g P/cap*a
$S_4^+{}_2$ = 600 g P/cap*a
ΔS_4 = (1200 g P/cap*a)* T_1

additional useful stock, calculated as the area under the stock generation graph, which when converted to the period of self-sufficiency (at subsistence production level: see Appendix B for the amounts) generates within 100 years ($\Delta S_{4,\,100}$ = 120000 g P/cap) a self sufficiency of:

ΔT_1 = 120000/1700 = 70 years with the Turkish diet

ΔT_1 = 120000 /3850 = 30 years with the Austrian diet

These periods indicate the number of years, for which a society can sustain itself with zero import and no additional recycling, from ($t = T_1$) on. So, the end of the period would be pushed into future ΔT_1 years. Yet, additional secondary resource recovery would take place during this period as well. Therefore, roughly 50-150 years of self-sufficiency could be created with such stock generation within one century. That means the period T_1 could be extended by [(0.5~1.5)*T_1].

Table 4.41 shows the indicators calculated. Losses to the local environment are reduced considerably due to reduced input to the system, yet little change is observed in these inland losses when compared to Scenario 1, inland pollution of P is not much reduced beyond the level it did in environmental protection scenario. Concerning the hinterland losses however, the reduction is considerably high also in comparison to Scenario 1. I_4 shows the primary resource input to the most efficient consumption scheme, where most losses are zeroed out and food production takes place at the subsistence level: Depending on the diet of the region, the P-rock use feeding the population should at least be 2-3 times more than the directly consumed amount, i.e. the diet.

Table 4.41. P-management Indicators for the Scenario 2

Indicator	Status Quo		Scenario 2	
	Turkey	Austria	Turkey	Austria
I_1: Inland losses	6.1	4.5	0.9	1.3
I_2: Soil accumulation	-0.4	1.8	0	0
I_3: Hinterland losses	0.9	3.5	0.2	0.2
I_4: P-rock use	7.6	17.6	2.2	3.1
I_5: Dispersion	6.8	8.3	1.1	1.6
I_{6a}: Storage, medium grade	0	0	0.3	0.2
I_{7a}: Stock, medium grade	140	0	225 + (0.5~1.5)*T_1	(0.5~1.5)*T_1
I_{7b}: Stock, low grade	10	?	10	?

Comparing (I_1+ I_3) to I_4 shows that half of the P-rock used is getting inevitably lost in the environment. Still, the dispersion (I_5) is around the same level with the losses, meaning that the wastes from consumption are not allowed to be dispersed in the environment. These are then conserved in concentrated forms and sent to the useful stock of the region (I_{6a}). On the other hand, the period of self-sufficiency in Turkey, i.e. the life-time of inland useful stock itself increases in this scenario due to the reduced harvest: I_{7a} shows, that if the inland useful stock which would suffice for 140 years at today's consumption levels (see Figure 4.34.a) would not be used and conserved during T_1, the same amount would supply the same society for some 225 years at the end of this period, because of the low subsistence level production and consumption. Besides, if a storage of secondary resources is taking place for one century, an additional self sufficiency period of 50 to 150 years could be generated. When compared to this, direct recycling starting at the end of this period would recycle back 20-30% of the agricultural need (see I_6). I_6 is a flow indicator and shows a momentary state.

In this scenario, I_5 and I_6 show, that in fact T_1 is not determined by destiny and can be prolonged into future by the management of the flows and stocks. If the resource use is to be extended beyond the given natural limit for a long-term use, conservation as described in this work, and as indicated by I_5 and I_6 becomes necessary. In this prolongation, conservation of secondary resource can be as important as the reduction of the primary resource use and the losses.

The case for zero inland phosphorus stock and high global scarcity is investigated below in Scenario 3.

4.2.6.3. Scenario 3: Soil Mining

Soil mining of nutrients has been taking place in the history contributing also to the desertification of formerly productive areas. Concerning phosphorus, soil mining is an ongoing practice today, like in Sub-Saharan Africa and some other developing regions. P-mining from soils could be one of many reasons of the complex process of desertification. It can be stopped or the situation improved if the symptoms are recognised and acknowledged timely. According to USGS, an area undergoing desertification is brought to public attention only after the process is well underway. "Often little or no data are available to indicate the previous state of the ecosystem or the rate of degradation" (USGS, 1997). In particular with P,

the method used here could signal a nutrient loss contribution to desertification by pointing at negative soil balances of nutrients. If a negative soil P balance prevails for a period of time, the soil would become a P-deficient one. In this scenario, soil mining is a result of scarcity: Not having enough P-resource to replenish the soil nutrients at the rate of harvest, which should sustain the population, brings about a negative P balance, which in turn depletes the soil stock. If P gets scarcer in a long-term, this kind of soil degradation could be observed in developed countries as well.

This scenario aims to show how the system would look like when imports are reduced to levels rendering soil mining inevitable, as the population has a minimum necessary dietary requirement. In running the soil mining scenario, Scenario 2 is taken as the starting point. It is assumed that all inland useful stock has also been consumed before entering this stage to keep the dietary level unchanged as long as possible (prolonging T_1 in the 2nd Scenario). At some point this is no more possible. Scenario 3 starts when diet is reduced to the minimum necessary level with a vegan diet. Soil mining takes place, as the input of primary or secondary P resources is not enough to produce the necessary dietary level. This results in irreversible depletion of the soil P as described below. Scenario 3 discusses an extreme case in order to set the autonomy of a region lacking useful stocks into question.

The management aims to feed the population at the required level for the longest term possible. The following changes are induced in this scenario:

1. Import P, without increasing the costs of agricultural production too high, i.e. at a much lower level than before (because the grade and the quality of the primary resource are at their lowest, costs incurred at the highest).
2. Apply all imported P as fertilizer on the agricultural soil to replenish the soil P, aiming to harvest plants at the minimum dietary requirement (assumed to be 400 g/cap*a)
3. Control the erosion of P, which is also naturally reduced due to lower soil P content (Halved once again).
4. Use the harvest, without losses in processing, and for a vegan diet
5. Collect and manage all wastes
6. Store the recoverable potential for future use.

The resulting flows are again calculated in the Appendix B.

The resulting system picture is shown below. It is valid for both regions as in this scenario the regional differences are not there anymore. Life-style induced changes disappear due to the high scarcity of the substance and all useful stocks apart from the soil stock are used up.

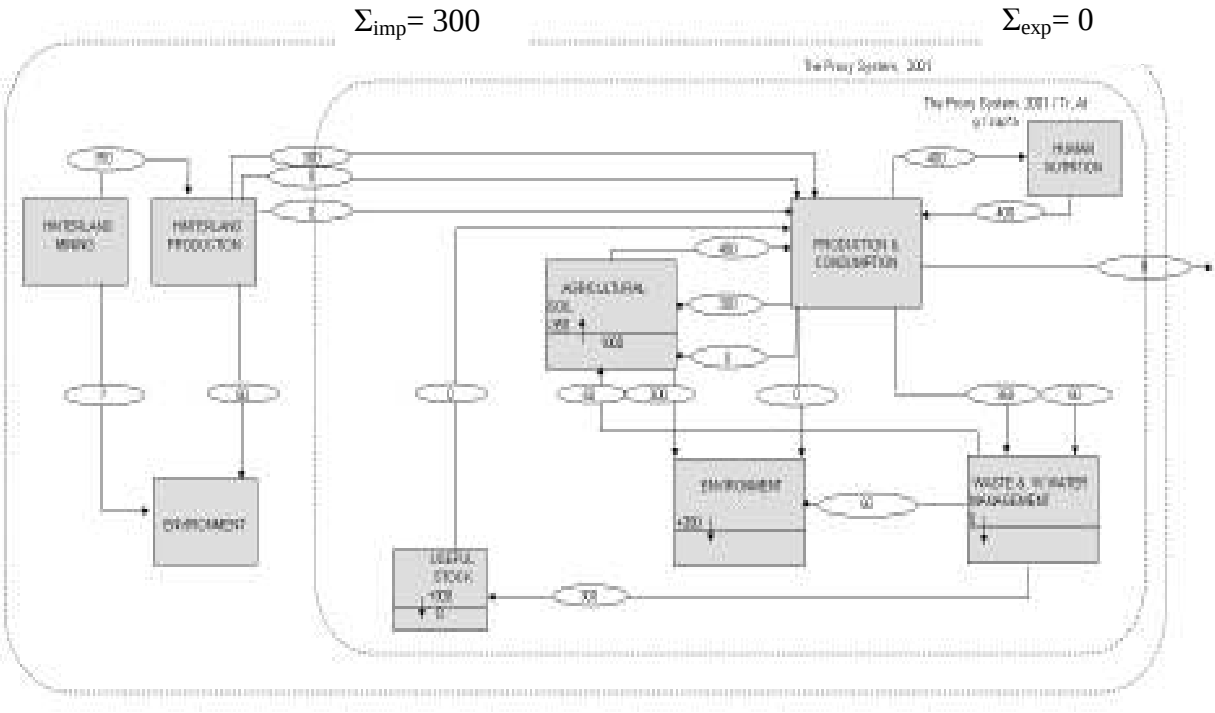

Figure 4.40. The Proxy System for Scenario 3

On this picture, the agricultural soil stock in the plough layer is depicted as calculated in Section 4.1.8. This number is highly uncertain and should be seen as an order of magnitude. As it can be seen on the picture, animal agriculture does not exist, manure input to the agricultural soil and all losses apart from the erosion are zeroed out, all P in wastes is recycled or recovered. There is a negative balance in the agricultural soil, because the fertilizer input is restricted due to the scarcity of the primary resource, and output through harvest and erosion is higher due to natural conditions. In this case of reduced resource use, secondary resources having favourable P contents and high concentrations are also limited as depicted in the Figure. As there is not enough global useful stock and no inland stock in this scenario, the agricultural soil stock will be depleted and the recoverable amounts in wastewater fully utilised.

Secondary Resource Potential

Until the soil stock depletes, the society draws the necessary dietary level from the soil stock, and builds up a useful stock from wasted P in a stable form. After depletion of the soil P, the

useful stock should complement the fertilizer input in order to draw the necessary amount. Such a stock is created as long as consumption continues, and has the maximum size,

$\Delta S_4 = S_4 = (300 \text{ g P/cap*a})* T_2$ (stock is empty at t =0)

In the best case, assuming that the import will not be reduced anymore and remain constant, the soil stock will be depleted in

$T_2 = S_1 / S_1^- = 1000/350 \approx 3$ years

Within these three years, a stock of 900 g/cap can be established with the secondary resource flow from waste management. In order to be still able to draw the P necessary for feeding the population, each year the import of P has to be supplemented by drawing P from this 'useful stock' in the same amount as in soil mining, i.e. 350 g/cap*a. Similarly, 300 g/cap*a will be sent to the useful stock every year. The depletion of this stock at an annual rate equals to the difference between the two. In this example, it amounts to a delta of 50 g per year. Given the initial endowment of 900 g built up during the first 3 periods, this would allow to feed the population at these levels for another

$T_3 = 900/50 = 18$ years.

Theoretically, from this point on, the minimum dietary level to feed the whole population starts to be reduced. The natural result of this is that the population shrinks. A difference of 50 g per year is not measurable with confidence. Yet it is clear, that a self-sufficiency of a region without inland or global useful stocks is impossible to attain in case of such a scarcity, even with the best recycling technology- for sure no longer than 30 years.

The indicators are calculated and the results shown in the Table 4.42. $I_{1,}$ the inland losses per dietary P are the same as those in Scenario 2 for Turkey, because the diet was anyway more plant based. This means if the losses can be controlled by proper management as in Scenario 2, they are already reduced to a minimum. Reduction in diet to 400 g does not affect the indicator I_1 at all, as reduction in diet and the loss are proportional in this case. The conversion of the diet to a vegan 400 g causes however a difference in Austria in terms of I_1 when compared to 2nd scenario. Here, the difference by changing the diet causes a higher reduction in losses. Changing diet reduces inland losses by 40% per P consumed in diet.

Table 4.42. P-management Indicators for the Scenario 3

Indicator	Status Quo		Scenario 3	
	Turkey	Austria	Turkey	Austria
I_1: Inland losses	6.1	4.5	0.9	0.9
I_2: Soil accumulation	-0.4	1.8	-0.9	-0.9
I_3: Hinterland losses	0.9	3.5	0.1	0.1
I_4: P-rock use	7.6	17.6	0.8	0.8
I_5: Dispersion	6.8	8.3	1	1
I_{6a}: Storage, medium grade	0	0	0.8	0.8
I_{7a}: Stock, medium grade	140	0	<30	<30
I_{7b}: Stock, low grade	10	?	0	0

A negative soil balance- almost as much as the food intake takes place in this scenario, and hinterland losses are minimal. P-rock use was reduced below the dietary consumption of P (see I_4) due to scarcity. Yet the dispersion, indicated by I_5 is higher than the P-rock use. This points at the entropic character of the system and shows that the 'depletion' in the anthroposphere is continuing independent from the size of the input: Depletion is an ongoing process and is not limited to the primary resource extraction and use.

I_{6a} shows that when harvest is so little and losses minimised, amounts in wastes become relatively important and every bit of P in the wastes is recycled to the system. Although this indicator states that P-need of 0.8 years can be generated from 1 years dietary consumption (agricultural turnover low because of the vegan diet, secondary resource potential high because of zero loss and maximum recycling), the amount does not sum up to a long period of self-sufficiency as an initial resource endowment does not exist and the soil stock depletes in a couple of years. Without having an initial useful stock and under such high scarcity conditions a region could sustain its population for less than 30 years. This period could become longer to some extent by revolutionising the agricultural production using new technologies. Afterwards, the dietary P per person falls below the necessary requirement and the society must shrink.

5 DISCUSSIONS AND CONCLUSIONS

5.1 Conclusions on the Method Used

This study introduces the following features to the existing MFA technique: 1.) It uses different levels of MFA for analysis and for evaluation, which are interconnected. 2.) It develops an empirical model for the regional management of phosphorus (P) to describe the anthropogenic metabolism of P, quantifying and evaluating it at a national level in detail. 3.) It applies this model to two countries which differ widely, thus making them comparable. 4.) It shows the uncertainties and represents the quality of data on the system. Processes are balanced with flows having uncertainties 5.) All regional stocks of the resource in question are estimated.

The study also presents an evaluation method for the MFA analysis carried out in the first part. This evaluation approach can be applied to different kinds of problem definitions, as long as the underlying MFA analysis is carried out thoroughly. The evaluation reaches the methodological goals of this study in the following ways: 1.) Developing a management model based on the MFA, on which indicators can be defined, 2.) Widening the scope of the MFA to involve long-term considerations and hinterland pollution aspects. 3.) Depicting the use of the management model and the indicators a) in comparing different nations' performances in the use of the non-renewable resource b) in monitoring or in calculating the effects of management decisions made, i.e. in planning.

There are lessons learned concerning each point listed above. Following insights are gained from the methodological point of view:

1. **Levels of the MFA:** It is shown that MFA can serve solving a range of problems at various levels: Sectors are studied as subsystems in this work and balanced in a detailed way (2nd level). This much detail was not necessary to understand the regional metabolism of the substance, which was already studied before (Baccini and Brunner, 1991; Brunner and Rechberger, 2004). However, the unfolding of sectoral black boxes revealed many unaccounted-for flows, like manure, imported / inland produced fodder, other imported goods, losses, etc., to be used for the evaluation and

management. This level of detail also clearly showed where data needed for the management is lacking. The regional level (1st), where the sectors were reduced into black boxes provided an overview of the regional flows and stocks by combining all relevant sectors for the resource in question within the spatial borders. The management system (0th) is designed for evaluation: Measuring performance, designing and running scenarios, comparisons between two different cases or between various states of one case are made possible by designing the management system. This system itself is a simplified MFA derived from the 1st and 2nd level systems with few key flows and stocks enabling definition of indicators, and enlarging the scope for the evaluation. The underlying levels of MFA provide the flexibility in designing the upper system for evaluation, which allows for developing various management systems depending on the problem definition.

2. **The model:** Data availability, knowledge on the natural and anthropogenic flows of the substance, and previous studies were used in defining the processes and the subsystems. One of the challenges of this study was to collect recent and detailed data with uncertainties to describe the P-metabolism of a region at the national scale. The substance P is traced through the processes. National, international statistics and balancing of various processes are used to produce the necessary information. The methodological conclusions drawn from this part of the work are:
    a. **Agriculture:** Animal production is the most inefficient process in this system. As it is difficult to give a range for manure amounts and their P content, several approaches must be compared. Determining the actual amount of fodder consumption requires estimations on inland production, imports and feed additives. These are hard to reach data and are incomplete even if they exist in statistics. Again a number of approaches are used to arrive at meaningful numbers. Crop production data is relatively easy to obtain, both from national and international databases, but it needs to be completed. Erosion flows are highly uncertain at this scale, and bring the biggest uncertainty and instability to the system.
    b. **ITCT:** Systematic data collection is difficult; the challenge is much bigger, because there are huge gaps in data availability, as many industries simply do not provide numbers. A system was designed specifically to collect this data, depicting the most important industries using P, each as a black box. Steel industry was not included as the flows in the case studies were not relevant.

This system was better suited for analysing and managing P in ITCT (An even better one would separate manufactory and distribution and manage their wastes also separately). This system could not be balanced due to lack of data. It is still used to show the gaps in data availability. Industrial wastewater and waste inventories, as well as the inter-sectoral flows of goods are needed to balance individual industries. To make the system more straightforward and easy to follow, as well as to mask off unknown flows, ITCT is reduced to a black box. Although detailed data for various industries was collected (like production), it was impossible to balance individual industries due to the lack of data. Data availabilities and consistency concerning feedstuff, the good called 'fodder from industry', including mixed fodder, feed additives, by-products, and the net import, are poor. Different institutions use different systematic of collecting and tabulating data. The way the statistical data was compiled, i.e. in groups of goods piled together, makes it difficult to identify substance flows. Estimating the phosphorus concentration in a group of goods, which are considered as one flow in statistics, is problematic. Details of this estimation are provided.

c. **Household:** Data produced on food consumption can be manifold, depending on where in the system it is defined. This study classified these as 'P produced', 'P distributed', 'P purchased' and 'P intake'. Metadata must be studied carefully to find out which exact flow is represented by what is called 'supply' in food balance sheets and 'consumption' in national statistics. Data on detergent related P in wastewater is difficult to reach, and thus distinguishing this flow is time consuming. P used in detergent or burnt in biomass should be included in the system, as some countries continue these uses.

d. **Wastewater Management:** It should be kept in mind that not all wastewater produced is collected and treated and that not all wastewater treated undergoes advanced treatment. Losses from sewer system or from the source of generation need to be considered. Managing the wastewater related P requires an account of all these flows. The system described allows estimating these, and the losses from the sewer system as far as possible.

e. **Waste Management:** The structure of national waste statistics differs greatly from region to region. These differences restrict the choice in system design,

which therefore follows primarily the data availability. As more and better data is available on the disposal side of the process than on the input side, the balancing is done from back to front, i.e. in the opposite direction of the substance flow. Only municipal wastes are calculated, other wastes are considered not relevant to P-flows.

3. **The case studies:** The developed MFA is applied to the countries Turkey and Austria. These countries differ in size greatly (1:10), but they also completely differ on cultural, socio-economic, geographical, climatic, historical and many other grounds. These bring about strikingly differing consumption behaviour and choices, like diet, use of energy sources and detergents, agricultural organisation, approach to the waste problem and so on. Therefore it is a challenge to develop and quantify a model which can be applied to both cases. Still, this comparison shows that natural limits cause similar per capita flows in certain processes. Discussions on the per capita flows in both regions provide a better picture of the anthropogenic system and the differences become more obvious. This helps gaining the necessary insight for the development of a management model for the evaluation.
4. **Data handling:** Data is collected mostly from national statistics. These are recorded as flows of goods. If the data in question represents a functional group which involves various goods in varying chemical structures, estimation becomes difficult for a Substance Flow Analysis. Another problem is that such mass flow data is always recorded as a single value in statistics, whereas concentration data (records of analytical measurements) can involve uncertainties. In substance flow analysis (SFA), the product of these two values is used. This work takes the uncertainties of the substance flows into account. However, some P-flows estimated have their uncertainties sourced only from the concentration ranges. This uncertainty then is calculated and used in this study to balance the processes. This is explained in Methodology. As a conclusion, the study also showed that there is an obvious need towards the analytical measurements on the flows of (at least the strategic) resources. Because a flow with high variability and/or uncertainty can ruin the balance of an essential process, prevent estimating the unaccounted-for flows within a safe margin, and cause knowledge gaps. An example of this happening with regards to P is the flow erosion which affects the balance of the process agricultural soil. Having this in mind, the demonstration of the data on system pictures differentiates between collected data and derived data as explained in Methodology. Besides involving uncertainties, the

feature of depicting data quality in the system adds to the quality of the MFA carried out here.

5. **Regional stocks:** Determining all stocks of the non-renewable resource in a region seems necessary, especially if the long-term resource use in that region is concerned. The reason for this is shown in the Scenarios section by taking +/- stock changes into the evaluation. In particular with P, there are huge P-stocks in the region, all of which have concentrations of less than 1% (<0.5%). This leads to the conclusion that low entropy in the system is in fact the real problem leading to the scarcity concern for the resource. As a result, while evaluating the MFA, depletion is redefined and indicators developed to incorporate grade and dilution aspects into the approach. Determination of the soil stock and the useful stocks of the region made it possible to look into the future management of the substance in a country.
6. **The management model:** This study confirmed the observation that the MFA tool can point at hotspots in resource management by representing the material flows. However, it also attached two separate functions to MFA, the 'description' and the 'management' of flows and stocks, by carrying these out at different levels. For the latter, a way for developing a 'proxy system' is shown, which depends on the problem statement and the nature of the substance.

The proxy system proved to be a practical representation of the problem helping easy communication by compressing information. Still, the underlying MFA made it possible to design and manipulate this system. There can be many different proxies developed on top of the same MFA analysis. The one designed here dealt with the depletion and the pollution potential created in a country by using the resource in question. It allowed evaluating the flows in a long-term and including the hinterland, i.e. in a wider scope.

Calculating Hinterland use provided: 1.) the actual consumption of the society from the global stocks of the non-renewable resource, which is mostly higher than the directly imported raw material. 2.) The potential pollution caused elsewhere because of the processed goods imported to the region. On the other hand, only the processing of the raw material into goods could be taken into account in estimating the hinterland consumption and pollution. The mining process with all its losses and environmental

costs requires specific studies carried out for most resources. This is also true for the P resources studied here.

The two criteria of the evaluation are the depletion potential and the pollution potential. With regards to these criteria, the proxy system shows which processes stand out and affect them. The two most prominent sectors for the resource P are studied and solutions offered. 1.) In the agricultural sector: Increased efficiency will be necessary. Scientific investigations on rendering the added fertilizer P more available to the plant material continue, while a better understanding and management of soil P stocks has also been sought. Increased efficiency goes hand in hand with reducing the losses that pose the pollution potential. This study makes those changes measurable. 2.) In waste/wastewater management: a reclassification and a redefinition of some losses from all processes, based on their value concerning the resource in question (valuable substances included) should be done. For such redefinition, P contents and the concentrations are offered here, which shows some potential for the long term use. There are unaccounted-for flows having high value and utility in the system. For example the flow ‚manure' is necessary in the system. A proper pricing of all related goods should follow the usefulness of these, i.e. the P grade in this study.

7. **Indicators:** Indicators were defined to represent the regional performance in managing the resource. The use of these to compare the management performances of different nations, and in planning or in monitoring is shown on scenario experiments: I_1 showed not only the pollution potential caused but also the inefficiency in the use of the resource, bringing them together in one number. I_2 proved to be necessary to protect the agricultural soil quality. The future diffuse pollution potential could be traced with this number as well. I_3 brought a new perspective to the environmental pollution problem by acknowledging the pollution created beyond the national borders as a consequence of the national management, and by considering this as part of the management performance. I_4 helps comparing every nation's real consumption from the global endowment of the non-renewable resource. It represents well enough the raw material used abroad for the production of imported high-level goods including the resource. I_5 represents another new approach of this study: It assigns a value depreciation to the non-renewable resource through consumption, here by the dispersion of P in the environment. This excludes the necessary portion of dispersion by fertilizer use. This indicator was useful in determining the real loss from the

system. Its being small meant either reduced losses in the system or separation of useful waste streams and putting them into use. I_6 was designed to point at the stock generation in the region in a way which could be useful in the future. Secondary P resources were used in the scenarios to generate such stocks. The number of years a region could sustain itself with the non-renewable resource must be seen as part of the strategic resource management. In this study, this period was represented by I_7. It is the life-time of the regional stock including the owned natural reserves and anthropogenic stocks having a high grade. As shown in scenarios, this indicator proved to be necessary in discussing long-term resource use strategies. It is more useful as it is defined based on the primary plant production- or the P removed from soil: This provides the flexibility in making management decisions. It is also defined at two grade levels: Useful and potential useful stock. This distinction again showed the importance of grade. When converted to I_7, the seemingly vast amounts of low grade phosphates do not prolong the life-time for a noteworthy period.

8. **Scenarios:** Scenarios are developed to show the use of the indicators and to test certain resource and waste management choices. This part of the study brought the insight that such resource management scenarios must be both able to guide today and the future. Besides assuming that the routine of today might continue in the long term, based on scientific findings, they also should take the warnings about the future into account and capture such future possibilities. Three types of scenarios are used in this study to extend the knowledge produced:

    a. Business as usual in resource availability: this scenario represents the optimistic 'no scarcity at all and endless primary resource' view. The management efforts concentrate on the environmental pollution criterion. Such a scenario shows the limits of diffuse and point source pollution control, as well as the extent to which the hinterland pollution can be reduced without changing the consumption pattern. Additionally, the maximum potential of secondary resource recovery can be discussed under this scenario.
    b. Scarcity: this scenario assumes a gradually arising scarcity. It introduces a period (T_1) which provides a handle for a far sighted planning. This version of scenario says that there is a period which the scarcity allows until the primary resource constraint becomes binding for the population. It tests long-term management measures the society can take, if this scarcity arises. It also

shows, what the minimum amounts are to run the metabolism and for how long.

c. Autonomy: this shows if the region can sustain itself having the resource in question less that the minimum requirement level. What would be the consequence of not having enough of the resource? Checking this for the resource to be managed is important to show how essential the primary resource is, how supportive the natural mechanisms for the anthropospheric metabolism are.

   The effect of previous stages in postponing the last stage by not depreciating big amounts of the resource can be show as Δt 'the extended period of self-sufficiency'. This study showed that T_1 can be prolonged for Δt years by:

   i. Increasing the existing stock by saving concentrated P, i.e. stock generation
   ii. Increasing the life time of the existing stock by reducing the resource use.

   Owning an initial endowment helps. The third scenario stresses the importance of (+/-) changes in various inland stocks. Indicators make all these measurable.

5.2 Conclusions on the Results Obtained

1. Based on the available information, it is not yet possible to know when the phosphorus resources will be depleted. So far, there exists not enough geological information or econometric studies either on phosphorus scarcity being increased in the last decades or not. High quality and high grade ores extracted today are reduced in value through dispersing them in the environment, and thus they will not be available in the future. This might in the long term increase the cost of using P, and threaten life standards. Yet, it is unknown how far this future will be from today.

2. Comparison of the P flows and stocks of two countries, Turkey and Austria depicts the similarities and differences between two widely differing societal metabolisms. In Table 5.1 these are summarised, showing the differences in flows as the factor between the two cases. The compared amounts are phosphorus flows of two countries in gross amounts, and not the per capita flows (see Section 4.2.1 for the comparison of

the per capita flows). The most influential flow, P-fertilizer consumption, was reduced in Austria 3-fold between 1960`s and 2000`s. Turkey only started up the use of the P mineral fertilizer around 1960`s, increasing this 6-fold between 70`s and 80`s to reach today's consumption level which is the 10-fold of Austria as shown in the table below. MFA explains interesting tendencies, such as, Turkey producing 20 times more P in the wastewater, whilst having a low-meat diet, or actually consuming dietary P as much as Austria or even more, by using plant proteins.

Table 5.1. A comparison between Turkey and Austria over their P-metabolisms

Comparison	**Turkey**	**Austria**
Employment	46% Agriculture 20% Industry 34% Services	0.8% Agriculture 30% Industry 68% Services
Area	×9	
Population	×8.5	
Flows, compared as kt P/a	**Turkey**	**Austria**
P harvested from agricultural soil	×5	
P-fertilizer consumption	×10	
Plant products for human nutrition	×(10~11)	
Animal Products	**×(2~3)**	
Animal Density, LU/km^2		×(2~3)
Manure to agricultural soil	**×1**	
Import phosphates (total)	×7	
Export P fertilizer		**×4**
Detergent P use	**×100**	**banned**
Fodder Import	×1	
Fodder Export	**×1**	
Fodder use from by-products	×10	
Fodder from ITCT (import + bypr.)	×4.5	
Food Import	×1.5	
Food Export	**×1.5**	
P Other chemicals Import	×(2~3) 90% STPP	90% Ca phosphates
Food Supply	×8 20% animal products	50% animal products
Purchased Food	×10 15% animal products	55% animal products
Household P input	**×23**	
Sewer P from household	×5	
Sewage sludge production	**×1**	
Diverted waste		**×5**

In the table, certain flows are more or less proportional to the population or the area ratio between the two countries (those which are x10 for Turkey). However, some are outstandingly different. These are depicted in bold-face. According to these, it can be easily seen that the animal agriculture is not productive in Turkey. Austria exports phosphates in food and fodder **as much as** Turkey does, and the fertilizer P-exports are even 4-fold when compared to Turkey. In Turkey, huge amounts of phosphate enter households, certainly through detergent-P and the fuel biomass from manure. Still the sewage sludge produced is as much as in Austria.

3. Comparison of per capita flows (Section 4.2.1) showed the importance of the detailed study. For example the fertilizer P applied to agricultural soil in Turkey and Austria are both around 3 kg P/cap*a. Yet, when manure amounts are taken into account, this goes up to 7 kg in Austria, and is only around 3.5 kg in Turkey. A seemingly similar flow is revealed in this way to be different by taking the flows unaccounted-for into account. Another example is the net import to the country, which is around 4 kg in both countries: Austria imports a considerable amount of this total in the form of processed goods. Looking at the overall primary resource use in the hinterland for the production of imports, Turkey uses 5 kg whilst Austria uses 10 kg.

   There is not a typical waste and wastewater P content either: The waste in Turkey is P-rich due to the ashes of biomass, wastewater in Turkey is P-rich too due to the use of detergents. This is to say, that the anthropogenic resources exist depending on the metabolism and the substance. Therefore, each case must be studied separately.

   Looking at the secondary resource potential in Austria, at the moment 250 g P/cap*a compost and roughly 800 g P/cap*a sludge could be produced. Compared to the mineral fertilizer P applied on agricultural soil, compost replaces 10% and sludge replaces 25 % of this need. In this case recycling is a political choice based on the national economy. Yet, drawing the comparison to the primary resource replaced, i.e. P rock used in the hinterland, Austria consumes almost 10 kg P/cap in this form. This means that sludge and compost together replace 10% of the primary resource use. At this scale, principles like the global welfare and intergenerational equity need to be consulted to judge this kind of conservation effort. It seems that efficiency in production and consumption needs to be increased and recycling must be evaluated in

a long-term perspective. Turkey does not produce compost or sludge, but has P-rich waste and wastewater. A better use of these could replace the hinterland primary resource use around 30% and the raw material imports by 40%. The problem is that part of this secondary resource potential comes from manure products burnt in the household as well, i.e. an amount which should belong to the agricultural soil, and the removal of which in this way impairs the agricultural soil quality.

4. The management need in two regions can be based on the following conclusions (per capita flows are used in this part!): P-losses created in the regions during the consumption of P are 5 to 6-fold of the dietary consumption. Austria continues accumulating P in agricultural soil which poses a future threat of diffuse pollution. Turkey has a poor P-management on the agricultural soil, with a negative average balance. The hinterland use of P-rock for the production of the imports to the region is 17-fold of the dietary consumption in Austria, and 8-fold of the dietary consumption in Turkey. This causes higher hinterland losses in case of Austria- 4 times more than Turkey. Of this hinterland use (total primary resource use), 92% ends up in the environment in case of Turkey (80% inland, 12% hinterland); 45 % ends up in the environment in case of Austria (25% inland, 20% hinterland). Austria has high exports from the country. In conclusion, Turkey should improve the wastewater management, and reduce the inland losses. The phosphorus flows in the country, primarily in the agricultural sector and then in the wastewater management, need to be managed. Austria should take the import-export structures into consideration and aim to reduce the hinterland pollution which results from the regional management of the substance. Austria can internalise the production of the goods, and produce them with high environmental standards and enhance the efficiency of agricultural use and food consumption. When 100% import dependency of both countries is considered, the inland useful stocks become important. Turkey has medium grade reserves which would provide a period of self sufficiency of 140 years, whereas Austria has none. The recycling question needs long-term perspectives to be judged by the resource conservation potential.

5. Scenario 1 assumed no future scarcity, and thus only environmental protection: Managing all losses and wastes, reduces the inland pollution, yet does not zero out all, losses through erosion and effluents remain there. In case of Austria, hinterland losses

are reduced radically by importing the raw material instead of the finished goods. Internalising the production in this way does not cause important changes in the P-rock share of the region in global consumption. Dispersion is not reduced considerably; there is even a slight increase in case of Turkey.

a. Controlling all losses would reduce the inland pollution potential significantly. Yet, the extent of the environmental protection is an economic decision to make.
b. Regions importing finished goods having high P would reduce their hinterland losses considerably if they would import the equivalent raw material instead. In case of Austria, importing the equivalent amounts of raw material instead of finished goods reduces P-rock use, as overall hinterland use, by 20%, while hinterland losses are reduced by more than 60%.
c. However ideal the waste and wastewater management may be, there will always be losses to the environment equal to the dietary amounts annually.
d. Under this scenario of environmental protection, there is a secondary resource potential in both countries which could account for 60% of the harvested P from the agricultural soil in Turkey, and 25% of the harvested P in Austria.

6. Scenario 2 assumed gradually increasing scarcity and thus resource conservation: If future scarcity reduces imports to the regions over time, consumption patterns would change. Keeping the diet as it is, this scenario shows that when the P-rock use falls to the ¼ of the P-rock required for today's consumption and life-style, the society switches to the subsistence agriculture. Even under such conditions, in order to provide the 600 g food P intake, 1700 g P with the Turkish diet and 3900 g P with the Austrian diet need to be harvested from the agricultural soil. Depending on the diet of the particular society, P-rock use feeding the population should be minimum 2 or 3-fold of the directly consumed amount, i.e. the diet.
    a. Inland losses can be controlled well enough by environmental protection strategies. Hinterland losses can be reduced depending on the form of imported goods. Yet, reducing primary resource use is effective in controlling hinterland losses.
    b. Even in this subsistence case, half of the P-rock employed gets lost in the environment.

c. Reduced imports over time cause a reduction in the secondary resource generation as well!
d. If the inland useful stock would not be used at today's consumption levels and conserved during the period of scarcity increase, the same amount would supply the same society for a much longer period, because of the low, subsistence level production and consumption, which is a trivial outcome. More importantly however, if a storage of secondary resources is taking place, an additional self sufficiency period could be generated. When compared to this, direct recycling starting in the subsistence period would recycle back 20-30% of the agricultural need. Yet, roughly 50-150 years of self-sufficiency could be created through stock generation within one century.
e. The period of increasing scarcity ending with the subsistence level can be prolonged into future by the management of the flows and stocks. If the resource use is to be extended beyond the given natural limit, for a longer term use, conservation as described in this work becomes necessary. In this prolongation, conservation of secondary resource can be as important as the reduction of the primary resource use and the losses.

7. Scenario 3 assumed that the primary resource import falls below the required level: Soil mining is a result of high scarcity, if there is no initial resource endowment (no inland and not enough global useful stock allocated). In this case, there is a negative balance in the agricultural soil, because the fertilizer input is restricted due to the scarcity of the primary resource, and output through harvest and erosion is higher. This soil degradation is inevitable, as the population has a minimum necessary dietary requirement. Dietary level of the society can fall to the necessary P intake, with a vegetarian diet, if scarcity becomes this restrictive.

a. When harvest is so little and losses are minimised, amounts in wastes become relatively important and every bit of P in the wastes is recycled to the system. Although 0.8 years of current P-need can be generated within 1 year of consumption, the amount does not sum up to a long period of self-sufficiency as an initial resource endowment does not exist and the soil stock depletes in a couple of years. Self-sufficiency of a region without useful stocks is impossible to attain in case of such scarcity.

b. Even if the P-import becomes less than the dietary consumption (I_4 = 0.9), and all diet-based indicators fall below 1 like in this scenario, the dispersion taking place in the region remains as much as the dietary consumption (I_5 = 1), as the highest indicator of this category.
c. Without having an initial useful stock and under such restrictive scarcity conditions a region could sustain its population for less than 30 years only. Then, the dietary P per person falls below the necessary requirement and the society starts to shrink.

5.3 Areas of Further Study / Next Steps

This study can be extended in various directions of resource management, as follows:

- Incorporating both upstream and downstream hinterland into the system, while assessing the global effects of the national resource management.
- Multi-level MFA for phosphorus going down to field level and up to global level.
- Application of the indicators presented and the long-term management approach introduced to other non-renewable resources.
- Assessing the economics of long-term P-recycling in order to judge if it also makes sense economically.

6. SUMMARY

The growth of the global population and the one of phosphate fertilizer consumption, which is at an even higher rate, attract the attention to the future availability of the non-renewable resource phosphorus (P). Its being essential but non-substitutable might cause a scarcity of this resource in the long-term. Soil background concentrations are not high enough to support the productivity levels expected from the industrialised agriculture of today, and the nutrients drawn from the soil need to be replenished to sustain the soil quality. There are primary and secondary resources of phosphorus (P). P fertilizers are produced from the primary resource, i.e. extracted from the limited natural endowment of phosphate rock and processed into available forms to produce fertilizer to be applied efficiently on agricultural soil. Secondary P resources, prominently manure or sewage sludge, are not as efficient as the primary resource in terms of P-availability to the plants. P-availability and toxic constituents in all fertilizing media become important in their application on soil. While passing through the regional metabolism, P gets dispersed and becomes mostly useless, even causing water pollution under certain conditions.

This study proposes methods for the long-term management of the non-renewable resource phosphorus. Phosphorus is one of the most important non-renewable resources, because it is not substitutable but necessary for life. ‘Resource management’ in this study does not only relate to the primary resource extraction and processing, but also involves all anthropogenic processes where the resource is used (and lost/wasted), as well as the building up of secondary P resource stocks. This study does not discuss the availabilities of P from various resources to the plants (this, in a long-term perspective can be left to technology), but it presumes that concentrated P-goods are necessary for sustaining agriculture. The management approach offered here covers pollution aspects as well as depletion aspects related to P-use. Eutrophication is not considered specifically.

The terms scarcity, economy, entropy, sustainability as well as their scope and use in this study are explained within a general context and for the purposes of this study in the introduction part. They lead to the choice of goals and principles of phosphorus management listed as follows:

Goals

1. Environmental Protection (Global pollution control: The emissions created elsewhere because of the imports to a region should be considered as part of the regional management practice)
2. Resource conservation (Intergenerational equity; Feeding the global population for the longest term possible)

Principles

1. Reducing the pollution and depletion potentials created: Management in a region should be directed towards such reduction by means of conserving high-grade goods, treating wastes, controlling erosion and losses,…
2. Anthropogenic goods and stocks having relevant grades and sizes need to be considered for an efficient management. Stock changes must be studied with a long-term perspective
3. Resource and waste management should distinguish between wastes and secondary resources and call for designing on one hand useful stocks, on the other hand other controlled sinks as final disposal sites, depending on the secondary resource capacity in the region, and the direct recycling possibilities.
4. The quality of the agricultural soil is to be conserved, while seeking highest production efficiency
5. Most important processes like plant and animal production having considerably different transfer coefficients must be studied and treated separately for the sake of management and not under one process, i.e. agriculture.

In this study following tasks are accomplished:

1. A detailed MFA study is carried out. Stocks and useful stocks are defined, determined.
2. A management system is constructed.
3. Indicators are defined for the measurement of the performance.
4. Scenarios on future possibilities of resource availability are developed
5. Resource management and waste management strategies are offered, and compared with the defined indicators

There are two main parts of this work. The first one is the Analysis presented in Chapter 4.1. It is followed by the second main part in Chapter 4.2, the Evaluation. The most important

features of these Chapters are presented in Table 6.1. These show the novelties of the approach used in this study.

Table 6.1. Highlights from the Analysis and Evaluation Parts of the Study

Chapter	Feature	Section
4.1 Analysis	Hierarchical MFA structure	4.1
	Uncertainties and balancing with uncertainty	4.1.1 - 4.1.6
	Regional Stocks	4.1.8
4.2 Evaluation	Inclusion of the Hinterland	4.2.2
	Indicators	4.2.4
	Scenarios	4.2.6

A detailed Material Flow Analysis is carried out in the first part of the study at a regional level. It is designed in a flexible way, so that various management models for many different problem definitions can be developed based on the 2x36 flows matrix (36 1st level and 36 2nd level flows) defined and quantified in the first analytic part. The study does not rely only on recorded data, but determines also the hidden and unaccounted-for flows in the analysis.

In previous MFA studies P-efficiency in agriculture was found to range between 0.2-0.6 (TC) depending on the intensity of animal agriculture. There are two case studies, Turkey and Austria, in this study. Both are 100% importers of the resource phosphorus. Their transfer coefficients for agriculture are around 0.5-0.6. The flow and stock calculations show, that P concentrations are low in the soil, in products, as well as in wastes. There are few goods in the anthroposphere having concentrated P, sewage sludge being one of them, where the concentration effort is carried out for the sake of environmental protection. That means, the amounts ending up in the sewage are concentrated through treatment. This applies similarly to certain agricultural wastes which are burned as fuel. Municipal wastes in general have low P-concentrations even after incineration. The recycling through compost or urine in rural areas does not contribute much to resource use of P (<10 %). Their use could be justified for parameters other than P. P fertilizers should be dosed into the soil just as much as needed, at the right time preventing any positive or negative balance. The purpose of P application should not be increasing the soil stock (except for the very deficient soils).

The second part is designed to systematically compare different statuses of one system (or two different systems against each other) and to produce 'if-then' solutions under different future scenarios. The comparison is based on both the pollution effects and the depletion (as opposed to conservation) effects of the regional resource management with a **long-term view** and in a **global context**. First, MFA flows are converted into per capita flows. Then the 'proxy system' is designed as a management model incorporating the hinterland, and the indicators are defined on it to measure the criteria. 'Depletion' and 'useful stock' are defined for the purposes of this study to introduce a 'grade' aspect into the evaluation, as the material property which is scarce in nature, or the essence making the resource useful. 'Dispersion' is described as the degradation of a flow into a lower grade or towards the properties of the geogenic background that enhances the depletion of the resource. (+/-) stock changes are taken into account. These show the capacity of the region to cope with a possible future scarcity.

Looking into the future of resource availability, three distinct patterns are identified and studied: The first one takes the human quest towards high technology as realised and for granted and assumes no scarcity at all even for this non-renewable resource in the long-term. The second takes the basic non-renewable resource economics model as a starting point and claims that the input to the region would be reduced over time if scarcity would arise. The third scenario assumes resource scarcity so grave that less than the minimum required level is available.

Resource and waste management strategies are tested in all three scenarios: Even the ideal waste and wastewater management strategy can not zero out the losses of the valuable resource, especially in agricultural runoff/erosion and as treatment effluents; These are almost as much as the amounts consumed through diet at their minimum levels. Importing the raw material instead of the processed good, while keeping the consumption the same does not conserve the resource, yet it reduces hinterland losses considerably. In case of increasing scarcity of the primary resource leading to subsistence agriculture, the stocking of useful P makes sense to prolong the self-sufficiency of a society. If the primary resource import falls below a minimum level and there are no useful stocks available, the agricultural soil stock of P gets depleted in a couple of years, even when a vegan diet is assumed. In such a case the highest efficiency and recycling rate would not sustain the population for more than a couple of decades.

REFERENCES

.

Adriaanse, A. et al., 1998. Stoffströme: Die materielle Basis von Industriegesellschaften. Wuppertal Texte. Birkhäuser Verlag, Berlin, Basel, Boston.

Albers, D.W., Hefner, S. and Klobe, D., 1993. Fertility Management of Cotton. http://muextension.missouri.edu/explore/agguides/crops/g04256.htm. Access: 2004

Apaydin, O., 1998. Enerji.
In: Türkiye Çevre Vakfi (Editor), Türkiye'nin Çevre Sorunlari-99. Türkiye Çevre Vakfi, Ankara, pp. 351-352.

Avcioglu, R., Acikgoz, E., Soya, H. and Tan, A., 2000. Yem Bitkileri Uretimi.
In: M.K.-. Ankara (Editor), 5. Türkiye Ziraat Mühendisligi Teknik Kongresi. TMMOB Ziraat Mühendisleri Odasi Yayini.

AWG, 2002. Österreichische Bundesgesetz über eine nachhaltige Abfallwirtschaft (Abfallwirtschaftsgesetz 2002)

Aydeniz, A.I., Okan, A.E. and Aydeniz, A., 2004. Tezek Üretimimiz ve Enerji Üretimimizdeki Yeri.
Türkiye 3. Ulusal Gübre Kongresi, Tarim, Sanayii, Çevre, Tokat, Türkiye, pp. 721-726.

Baccini, P. and Brunner, P.H., 1991. The Metabolism of the Anthroposphere.
Springer Verlag, Berlin, Heidelberg, New York, London.

Beaton, J.D., Roberts, T.L., Halstead, E.H. and Cowell, L.E., 1995. Global Transfers of P in Fertiliser Materials and Agricultural Commodities.
In: Phosphorus in the Global Environment. H. Tiessen (Editor), John Wiley & Sons Ltd.
http://www.icsu-scope.org/downloadpubs/scope54/2beaton.htm Access: 14.02.2003

Biancardi, C., Tiezzi, E. and Ulgiati, S., 1993. Complete recycling of matter in the frameworks of physics, biology and ecological economics.
Ecological Economics, 8(1-5).

BMLFUW, 2002 Gewässerschutzbericht
Austrian Federal Ministry of Agriculture and Forestry, Environment and Water Management.
http://gpool.lfrz.at/gpool/main.cgi?rq=ed&etid=29&eid=66483&oid=699&th=1,Wien.
Access: 2004

BMLFUW, 2002. Grüner Bericht.
Austrian Federal Ministry of Agriculture and Forestry, Environment and Water Management.
www.gruener-bericht-at, Wien. Access: 2004

Braun, M., 1997. Schätzung der diffusen Nährstoffeinträge in die Gewässer und der Wirkung von Maßnahmen in der Schweiz.
Vortrag auf der Tagung „Stoffbilanzierung in der Landwirtschaft. Ein Instrument für den Umweltschutz?" Federal Environment Agency-Austria, Vienna, pp. 153-170.

Bringezu, S., Schmütz, H. and Moll, S., 2003. Rationale for and Interpretation of Economy-Wide Materials Flow Analysis and Derived Indicators.
The Journal of Industrial Ecology, 7(2): pp. 43-64.

Brunner, P.H. et al., 1990. Der regionale Stoffhaushalt im Unteren Bünztal: Entwicklung einer Methodik zur Erfassung des regionalen Stoffhaushaltes.
Eidgenössische Anstalt für Wasserversorgung, Abwasserreinigung und Gewässerschutz EAWAG, CH-8600 Dübendorf; Switzerland.

Brunner, P.H. and Rechberger, H., 2004. Practical Handbook of Material Flow Analysis.
ISBN 1-566-70604-1, CRC Press LLC, Boca Raton, Florida.

Cornel, P., 2002. Rückgewinnung von Phosphor aus Klärschlamm und Klärschlammaschen. Nachrichten aus dem Institut für Techische Chemie, Geo- und Wassertechnologie, 3(1): 102-114.

Cornell University, 2003. Phosphorus removal for field and vegetable crops.
Department of Crop and Soil Sciences Nutrient Management Spear Program.
http://nmsp.css.cornell.edu/publications/tables/

Cromwell, G.L., 2003. Update on Phytase Utilisation in Swine.
Paper presented in Eastern Nutrition Conference, Canada.
www.dsmnutrafacts.com/enc_03/enc_03_4.pdf, Access: 2004

Dahl, S. and Kurtar, B., 1993. Elmali Environmental Protection Project-Feasibility Report.
Ömerli and Elmali Joint Venture. No: 21.

Daly, H.E., 1982. The Ultimate Resource by Julian Simon.
Book review. Minnesotans For Sustainability. From, Daly, Herman E. 1991. "Steady State Economics", pp. 282-289. Island Press.
http://www.mnforsustain.org/daly_h_simon_ultimate_resource_review.htm Access: 2004

Deevey, E.S., 1970. Mineral cycles.
Scient. Amer, 223: 149-158.

Eder, M., 2004. Entwicklung einer Methode zur Auswahl und Bewertung von Abfallvermeidungsmaßnahmen anhand der Kriterien Ressourcenschonung, Umweltschutz und Kosteneffizienz.
PhD Thesis in preperation, TU Wien, Wien.

UN, 1997. Definition of the term ‘resource depletion’, in EEA, 2006, European Environment Agency Glossary: http://glossary.eea.eu.int/EEAGlossary/

Esen, S.E., 2002. Türkiye`nin Kentsel Cevre Altyapisi (Atiksu bertarafi), Yatirim Ihtiyaci, Fayda-Maliyet Analizleri ve Strateji Önerisi (2002-2023).
Uzmanlik Tezi, Devlet Planlama Teskilati, DPT 2656

Eurostat, 2001. Economy-wide material flow accounts and derived indicators. Luxembourg.

F.Thalmann, Schermann, O., Schroll, E. and Hausberger, G., 1989. Geochemical Atlas of the Republic of Austria.

Geologische Bundesanstalt, Vienna.

FAO, 2004. FAOSTAT, Agriculture Statistics; Food Balance Sheets. 2001.
Food and Agriculture Organization of the United Nations, www.fao.org

Frede, H.G. and Bach, M., 2003. Heutiger und künftiger Beitrag der Gülle bei der Phosphorversorgung der Böden.
Vortrag auf der Tagung „Rückgewinnung von Phosphor in der Landwirtschaft und aus Abwasser und Abfall“, 6-7 Februar 2003 Berlin.

Geigy, C. (Editor), 1977. Geigy Scientific Tables.
Composition of Food, Volume 1, Basel, Schweiz.

Glenck, E., Lampert, C., Raeissi, H. and Brunner, P.H., 1995. Phosphorbilanz des Kremstales.
Institut für Wassergüte und Abfallwirtschaft, TU-Wien, Wien.

Glennie E.B., Littlejohn C., Gendebien A., Hayes A., Palfrey R., Sivil D.,Wright K. 2002. Phosphates and Alternative Detergent Builders - Final Report.
No:UC 4011, EU Environment Directorate.
http://www.europa.eu.int/comm/environment/water/phosphates.pdf

Goeller, H.E. and Weinberg, A.M., 1976. The Age of Substitutability.
Science, 191(no. 4228): 683-689.

Hartwick, J., 1977. Intergenerational equity and investing of rents from exhaustible resources.
American Economic Review, 66: 972-974.

Haygarth, P., 1997. Agriculture as a source of phosphorus transfer to water: sources and pathways.
Scope Newsletter, 21: 12-13.

Herring, J.R. and Fantel, R.J., 1993. Phosphate rock demand into the next century: Impact on world food supply.
Nonrenewable Resources pp226-246, 2(3): pp226-246.

Hotelling, H., 1931. The Economics of Exhaustible Resources.
Journal of Political Economy, 39: pp 137-175.

IFA, 2002. Fertilizer nutrient consumption, by region, 1970/71 to 2000/01.
http://www.fertilizer.org/ifa/statistics/indicators/ind_cn_dvp.asp Access: 2005

IFA, 2005. IFA-Production and International Trade.
http://www.fertilizer.org/ifa/statistics.asp Access: 2005

IFA/UNEP, 1998. The Fertilizer Industry, World Food Supplies and the Environment.
http://www.fertilizer.org/ifa/Form/pub_det.asp?id=766 Access: 2005

IFDC, 1998. An Analysis of the Potential Demand for Phosphate Fertilisers: Sources of Change and Projections to 2025.
International Fertiliser Development Center.
www.ifdc.org Access: 2006

IGEME, 2004. Phosphate and calcium phosphate statistics.
Export Promotion Center of Turkey, B.02.1. DTM.5.01.03.24/5346/422.01, Dis Ticaret Müstesarligi, Ihracati Gelistirme Etüd Merkezi (IGEME).

Isermann, K., 1996. Umweltbelastungen von Böden durch (Nähr)stoffeinträge, insbesondere durch reaktive Verbindungen der Nährstoffe C,N,P und S.
Stellungnahme als Sachverständiger zum Fragenkatalog der Enquete-Kommission. Büro für Nachhaltige Landwirtschaft und Agrikultur.

Isermann, K. and Isermann, R., 1994. Ausgangslage und Anforderungen an eine nachhaltige Landwirtschaft aus der Sicht ihres Nährstoff- und Energiehaushaltes.
VDLUFA-Schriftenreihe 36, Jena, pp. 609-612.

Johnston, A.E. and Steén, I., 2000. Understanding Phosphorus and its Use in Agriculture.
European Fertilizer Manufacturers Association EFMA (in print).
http://www.efma.org/publications/phosphorus/understanding%20phosphorus/contents.asp, Access: 2004

Kaplan, M., Aktas, M., Günes, A., Alpaslan, M. and Sönmez, S., 2000. Türkiye Gübre Üretim ve Tüketiminin Degerlendirilmesi.
In: M.K.-. Ankara (Editor), 5. Türkiye Ziraat Mühendisligi Teknik Kongresi. TMMOB Ziraat Mühendisleri Odasi Yayini.

Kilic, A., 2000. Kaba Yem Üretimi ve Sorunlari.
In: M.K.-. Ankara (Editor), 5. Türkiye Ziraat Mühendisligi Teknik Kongresi. TMMOB Ziraat Mühendisleri Odasi Yayini.

Kirchgessner, M., 1997. Tierernährung : Leitfaden für Studium, Beratung und Praxis.
Frankfurt : DLG-Verlag., 10th Edition, ISBN 3-7690-0549-X

Klindworth, A., 2000. Fertilizer Market Trends.
Presentation at the Kentucky Fertiliser and Chemical Association. The Fertilizer Institute.
www.tfi.org Access: 2005

Klis, J.D.Vander and Versteegh, H.A.J., 1996. Phosphorus Nutrition of Poultry.
In: P.C. Garnsworthy, J. Wiseman and W. Haresign (Editors), Nottingham Feed Manufacturers Conference. Recent Advances in Animal Nutrition, Nottingham UK, pp.71-83.

Köchl, A., 1995. Die Stoffdrehscheibe Landwirtschaft.
Wiener Mitteilungen, Wasser-Abwasser-Gewässer. Band 126 (Konfliktfeld Landwirtschaft-Wasserwirtschaft)

Köksal, O., 1974. Türkiye'de Beslenme.
Ankara, Unicef, Aydin Matbaasi.

Krautkraemer, J.A., 2003. Economics of Scarcity: State of the Debate.
Department of Economics, Washington State University.

Lebensministerium, 2001. Federal Waste Management Plan 2001.
Austrian Federal Ministry of Agriculture and Forestry, Environment and Water Management.

Lindenthal, T., 2000. Phosphorvorräte in Böden, betriebliche Phosphorbilanzen und Phosphorversorgung im Biologischen Landbau.
PhD Thesis, Inst. f. Ökologischen Landbau, BOKU, Wien, Austria.

Liu, Y., 2005. Phosphorus Flows in China: Physical Profiles and Environmental Regulation.
PhD Thesis, Wageningen University, ISBN 90-8504-196-1, Wageningen, The Netherlands.

Malthus, T.R. (Editor), 1803. An Essay on the Principle of Population.
(1798 1st edition, plus excerpts 1803 2nd edition). edited by Appleman P. Norton Critical Editons. ISBN 0-393-09202-X

Meadows, D.H., and Club of Rome., 1972. The Limits of Growth.
Universe Books, New York.
http://www.clubofrome.org/docs/limits.rtf

Mirovitskaia, N.S., W.Ascher and (Ed.s), 2002. Guide to Sustainable Development and Environmental Policy.
Duke Uni. Press. ISBN: 0822327457

Molterer, W., 1997. Austrian Information.
Volume 50(11). www.austria.org/oldsite/nov97/agri.html

Nabuurs, G.J. and Schelhaas, M.J., 2003. Spatial distribution of whole-tree carbon stocks and fluxes across the forests of Europe: where are the options for bio-energy?
Biomass and Bioenergy(24): 311-320.

Nötstaller, R., 2003. Österreichischer Rohstoffplan.
Arbeitskreis 2- Rohstoffwirtschaft und Bergwesen, Inst. f. Bergbaukunde, Bergtechnik und Bergwirtschaft, Montanuniversität Leoben.

NRC, 1994. Nutrient Requirements of Poultry.
N.R.C., Subcommittee on Poultry Nutrition, NATIONAL ACADEMY PRESS, Washington D.C., 9th Edition, ISBN 0-309-04892-3,176 p.

Obrist, W. and Baccini, P., 1986. Auswahlkriterien für Kompostierbare Abfälle.
Wasser, Energie, Luft, 78 (11/12): 290 – 294.

Office of the Prime Minister, 2001.
Directorate General of Press and Information, Turkey.
http://www.byegm.gov.tr/YAYINLARIMIZ/newspot/2001/may-june/n12.htm

Payer, H., Burger, P. and Lorek, S., 2000. Food Consumption in Austria. Driving Forces and Environmental Impacts.
A National case study for the OECD Programme on Sustainable Consumption
Institute of Eating Culture and Food Economics, Federal Ministry of Agriculture, Forestry, Environment and Water Management., Austria.

Pons, M.N., H. Spanjers, D. Baetens, O. Nowak, S. Gillot, J. Nouwen, N. Schuttinga, 2004. Wastewater Characteristics in Europa- A survey.
European Water Association (EWA). Laboratoire des Sciences du Génie Chimique, CNRS-ENSIC-INPL, BP 451, F-54001, Nancy cedex, Email :
Marie-Noelle.Pons@ensic.inpl-nancy.fr

Potter, N. and Christy, F.T.J., 1962. Trends in Natural Resource Commodities: Statistics of Prices, Ourput, Consumption, Foreign Trade, and Employment in the United States.
Baltimore, MD: John Hopkins University Press for Resources for the Future.

Richey, J.E., 1983. C, N, P, and S Cycles: Major Reservoirs and Fluxes.
In: B. Bolin and R.B. Cook (Editors), The Major Biogeochemical Cycles and Their Interactions. Scientific Committee On Problems of the Environment (SCOPE). Volume: 21
http://www.icsu-scope.org/downloadpubs/scope21/chapter02.html

S N Williams, L.R.M., A C Warnick, N S Wilkinson and L A Lawrence, 1991. Phosphorus concentrations in blood, milk, feces, bone and selected fluids and tissues of growing heifers as affected by dietary phosphorus.
Livestock Research for Rural Development, 3(2).

Saarela, I., 1998. Availability of phosphorus in different ashes, manures and sewage sludges.
Phosphorus balance and utilization in agriculture- towards sustainability. The Royal Swedish Academy of Agriculture and Forestry, Sweden.

Sanchez, P.A., 2002. Soil Fertility and Hunger in Africa.
Science, 295(5562): 2019-2020.
.
Saporito, L.S. and Lanyon, L.E., 2004. Evaluating the Spatial and Temporal Dynamics of Field Phosphorus and Potassium Balances on a Mixed Crop and Livestock Farm.
Nutrient Cycling in Agroecosystems, 69(1): 85-94.

Schachermayer, E., Bauer, G., Ritter, E. and Brunner, P.H., 1995. Messung der Güter- und Stoffbilanz einer Müllverbrennungsanlage.
Umweltbundesamt, Wien, Austria

Schlögl, G., 2003. Der österreichische Futtermittelmarkt.
Diplomarbeit Thesis, BOKU, Wien, 86 p.

Schmid Neset, T.-S., 2005. Environmental Imprint of Human Food Consumption.
Linköping, Sweden 1870-2000. Department of Water and Environmental Studies, Linköping University, Linköping, 580 p. ISBN 91-85299-95-2

Schnug, E., Rogasik, J. and Haneklaus, S., 2003. Quantitative und qualitative Anforderungen der deutschen Landwirtschaft an Phosphor für die Düngung.
Vortrag auf der Tagung „Rückgewinnung von Phosphor in der Landwirtschaft und aus Abwasser und Abfall“, 6-7 Februar 2003 Berlin.

Seymour, E., 2004. High Diversion- is it achievable?
Waste Management World, July-August 2004(Review Issue 2004-2005): 29-36.

Sharpley, A., 1999. Agricultural Phosphorus, Water Quality, and Poultry Production: Are They Compatible?
Poultry Science (78): 660-673.

Sibbesen, E. and Runge-Metzger, A., 1995. Phosphorus Balance In European Agriculture - Status And Policy Options.
In: Phosphorus in the Global Environment. H. Tiessen (Editor), John Wiley & Sons Ltd.
http://www.icsu-scope.org/downloadpubs/scope54/2beaton.htm Access: 14.02.2003

SIS, 2000. 1996 MANUFACTURING INDUSTRY WASTE INVENTORY. S.I.O.S.T

SIS, 2001. Agricultural Structure (Production, Price, Value).
State Institute of Statistics Turkey, http://www.die.gov.tr

SIS, 2003. Environmental Statistics Compendium of Turkey. 2745, Ankara.
State Institute of Statistics Turkey

SIS, 2003. Municipality Wastewater Statistics of 2001.
State Institute of Statistics Turkey

SIS, 2004. Municipality Solid Waste Statistics, 2002.
State Institute of Statistics Turkey

Skutan, S. and Brunner, P., 2004. Stoffbilanzen mechanisch-biologischer Anlagen zur Behandlung von Restmüll.
Projekt SEMBA, TUWien, Inst. für Wassergüte und Abfallwirtschaft, Abteilung Abfallwirtschaft und Stoffhaushalt, Wien.

Smaling, E.M.A., 1993. Soil nutrient depletion in Sub-Saharan Africa.
In: Van Reuler, H. and Prins W.H., (Eds.) VKP, Leidschendam, pp. pp. 53-67.

Smil, V., 2002. Phosphorus: Global Transfers.
In: T. Munn (Editor), Encyclopedia of Global Environmental Change. Causes and Consequences of Global Environmental Change. John Wiley & Sons, Chichester, pp. 536-542.

Sokka, L., Antikainen, R. and Kauppi, P., 2004. Flows of nitrogen and phosphorus in municipal waste: a substance flow analysis in Finland.
Progress in Industrial Ecology,, Vol. 1(Nos. 1/2/3): pp.165–186.

State Planning Organization, Turkey, SPO, 2001. Household Waste Composition Survey in Turkey1993.
Forth Subregional Training Workshop on Environmental Statistics, Bangkok.

State Planning Organization, Turkey, SPO, 2001. Sekizinci Bes Yillik Kalkinma Plani, Madencilik ÖIK Raporu, Endüstriyel Hammadeler Alt Komisyonu Kimya Sanayii Hammaddeleri Fosfat-Kükürt-Alunit Calisma Grubu Raporu.
DPT: 2607 - Öik: 618, Ankara.

State Planning Organization, Turkey, SPO, 2003. Agricultural Production- Major Crops.
State Institute of Statistics, Turkey.

State Planning Organization (SPO), 2000. Sekizinci Bes Yillik Kalkinma Plani, Gübre Sanayii Özel Ihtisas Komisyonu Raporu.
DPT: 2514 - ÖIK: 531, Ankara.

Statistik Austria, 2003. Physical facts on Austria.
http://www.statistik.at/fachbereich_topograph/tab1_englisch.shtml

Statistik Austria, 2003 a. Plant Production.
http://www.statistik.at/jahrbuch/pdfe/k18.pdf

Statistik Austria, 2003 b. Viehbestand.
http://www.statistik.at/statistische_uebersichten/deutsch/pdf/k06t_1.pdf

Steen, I., 1998. Phosphorus availability in the 21st century: Management of a non-renewable resource.
Phosphorus & Potassium(217): 25-31.

Steiger, B.v. and Baccini, P., 1990. Regionale Stoffbilanzierung von landwirtschaftlichen Böden mit messbarem Ein- und Austrag.
ISBN 3-907086-30-9, pp 45-48, EAWAG, Abt. Abfallwirtschaft und Stoffhaushalt, Bern.

Stumm, W., 1973. The acceleration of the hydrogeochemical cycling of phosphorus.
Water Res., 7: 131-144.

Tasli, R., Orhon, D. and Artan, N., 1999. The effect of substrate composition on the nutrient removal potential of sequencing batch reactors.
Water SA, Vol. 25(No. 3): 337.

Tilton, J.E., 2002. On Borrowed Time?
Assessing the Threat of Mineral Depletion. ISBN 1-891853-57-0, Resources for the Future, RFF Press.

Tönük, B. et al., 1984. Gida Tüketimi ve Beslenme.

TSN, Turkish Society of Nephrology, 2003.

Tuna, M. and Kinaci, C., 1999. Türkiye icin kanalizasyon maliyetlerinin belirlenmesi.
SKKD, 9(1): 27-34.

TUSIAD, 1998. 21. Yüzyila Girerken Türkiye`nin Enerji Stratejisinin Degerlendirilmesi.
Türk Sanayicileri ve Isadamlari Dernegi, Yayin No. T.SÜAD-T/98-12/239, ISBN : 975-7249-59-9Ankara.

Ungan S, Ü.R., Kaynak K, 1998. Türkiye`de Gida Tüketim Harcama ve Kompozisyon Verileri Analizi. Arastirma Sempozyumu.

USGS, 1997. Desertification.
http://pubs.usgs.gov/gip/deserts/desertification/ Access: 2006

USGS, 2004. Historical Statistics for Mineral and Material Commodities in the United States: Phosphate Rock Statistics.
http://minerals.usgs.gov/ds/2005/140/ Access: 2006

Wagner, M., 2003. Weltweite Phosphatvorräte und Kostenstrukturen bei ihrer Nutzung.
Vortrag auf der Tagung „Rückgewinnung von Phosphor in der Landwirtschaft und aus Abwasser und Abfall“, 6-7 Februar 2003 Berlin.

WHO/UNICEF, 2001. Access to Improved Sanitation, Turkey.
WHO/UNICEF Joint Monitoring Programme for Water Supply and Sanitation Coverage Estimates 1980-2000.
http://www.childinfo.org/eddb/sani/ceecis/turkey_sanitation1.pdf Access: 2004
Wiesenberger , H., 2002. State-of-the Art for Production of Fertilisers with regard to the IPPC-Directive.
Monographien, Band 105, ISBN: 3-85457-449-5, 86 p., UBA Austria, Wien.

Withers, P.J.A., Edwards, A.C. and Foy, R.H., 2001. Phosphorus cycling in UK agriculture and implications for phosphorus loss from soil.
Soil Use and Management, 17: 139-149.

WKO, 2004. Warenstromreport, Österreichs Außenhandel von 2835 (HS), für Jän-Dez 2001.
Wirtschaftskammer Österreich, Wien.

WKÖ, W.Ö. 1999. Produktsicherheit im Haushalt, Wasch- und Reinigungsmittel, Putz- und Pflegemittel.
Fachverband der chemischen Industrie Österreichs, Wien.

Wlcek, S., 2002. Die systemkompatibleErnährung von Schweinen im biologischen Landbau.
PhD Thesis, BOKU, Wien, 102 pp.

Yildiz, N., 2002. Fosfat.
Madencilik Sektörü. TMMOB Maden Müh. Odasi.
http://www.maden.org.tr/yeni3/yayinlar/kitaplar/madenciliksektoru2002/madenciliksektoru2002.htm, Access: 2004

Yildiz, N., 2003. Madenciligimize Bakis.
TMMOB Maden Müh. Odasi.
www.maden.org.tr/yeni3/yayinlar/kitaplar/Madenciligimizebakis2003/Madenciligebakis2003.pdf, Access: 2004

Winkler, W. (2005) „Entwicklung eines Verfahrens zur Bestimmung von Stofffrachten in Abfällen basierend auf der Methode der Stoffflussanalyse“ Diplomarbeit (22/2005) (TU Wien, Fakultät für Bauingenieurwesen)

Zessner, M., Deutsch, K., Schaar, W. and Kreuzinger, N., 1997.
Nährstoffbilanzen der Donauanrainerstaaten - Ergebungen für Österreich, Institut für Wassergüte und Abfallwirtschaft, TU Wien, Vienna, Austria, 1997.

APPENDIX A: SYSTEM DESIGN AND PROCESS DEFINITIONS

A1- Subsystem Agriculture

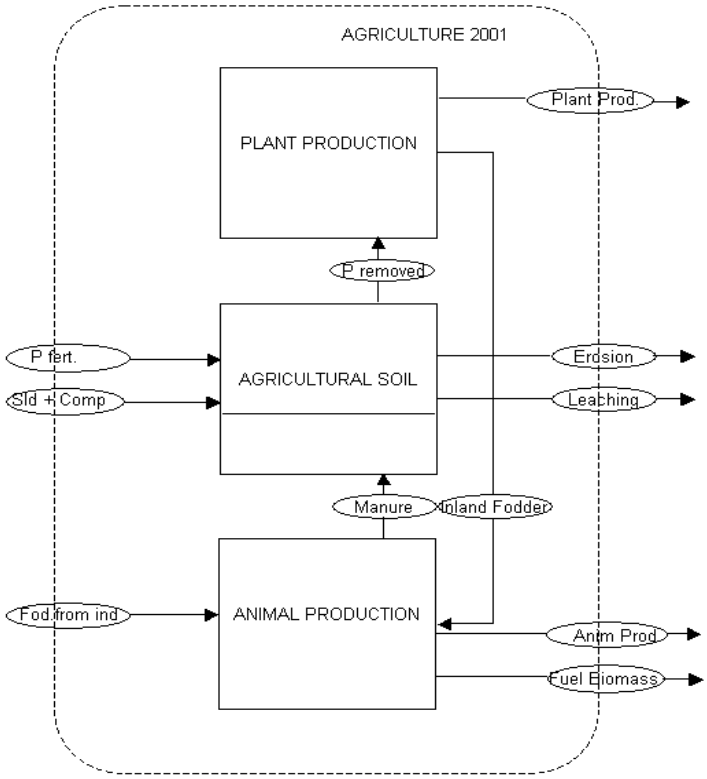

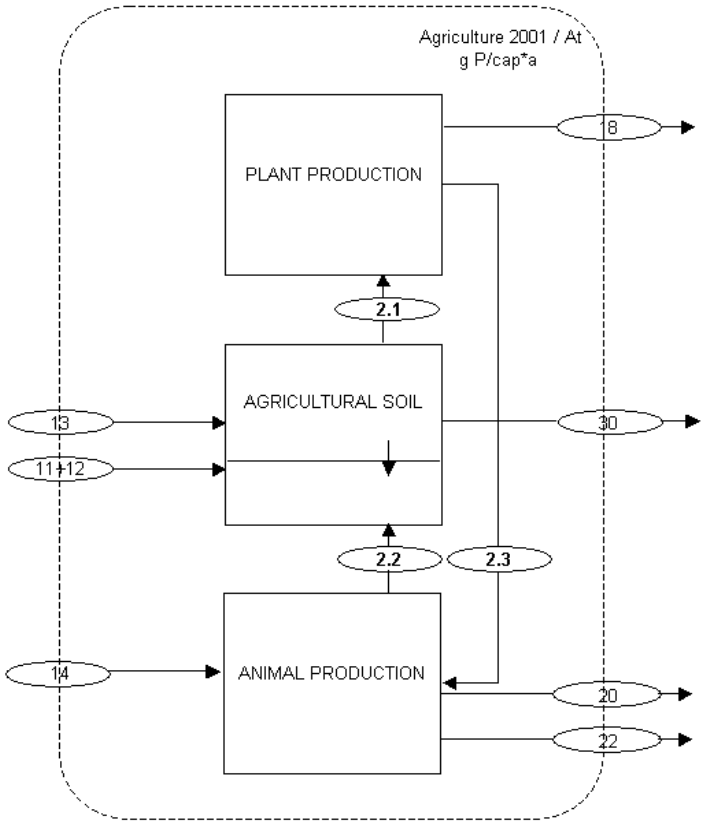

Table 1. Plant Production

Definition	Process converting the available P in the soil into plant products ready to be processed, consumed and fed or for grazing of animals			
Input	Originating Process	Input Good	Destination Process	Good Description
	Agricultural Soil	P removed	Plant production	Net P taken up from soil by all products, which are removed from the field leaving their rests in the agricultural soil
Output	Originating Process	Output Good	Destination Process	Good Description
	Plant Production	Plant products	Industry	Plant products to be processed, or to be distributed
	Plant Production	Inland Fodder	Animal Production	Fodder from domestic fodder production

Table 2. Animal Production

Definition	Production of meat, and animal products (milk and eggs)			
	Whole animals are leaving the system for slaughtery			
Input	Originating Process	Input Good	Destination Process	Good Description
	ITCT	Fodder from industry	Animal Production	Calculated as (required-inland). Involves feed concentrates, mineral additives, byproducts, imported fodder
	Plant production	Inland fodder	Animal Production	Fodder from domestic fodder production
Output	Originating Process	Output Good	Destination Process	Good Description
	Animal Production	Manure	Agricultural Soil	Natural Fertilizer
	Animal Production	Fuel biomass	Households	Manure + plant residues
	Animal Production	Animal Products	ITCT	Meat, eggs and dairy

Table 3. Agricultural Soil

Definition	Includes pastures and meadows besides cultivated area. A storage, transformation and transport process			
	Stores P in unavailable forms, transforms partly to available forms and transports these to the plants			
Input	Originating Process	Input Good	Destination Process	Good Description
	ITCT	P fertilizers	Agricultural Soil	Chemical P fertilizer consume
	Waste and wastew. Managemer	Sludge+Compost	Agricultural Soil	Recycled wastes
	Animal Production	Manure	Agricultural Soil	Natural Fertilizer
Output	Originating Process	Output Good	Destination Process	Good Description
	Agricultural Soil	Erosion + Surf Runoff	Environment	Losses from the soil
	Agricultural Soil	P removed	Plant production	The net P removed with plants

A2- Subsystem Industry

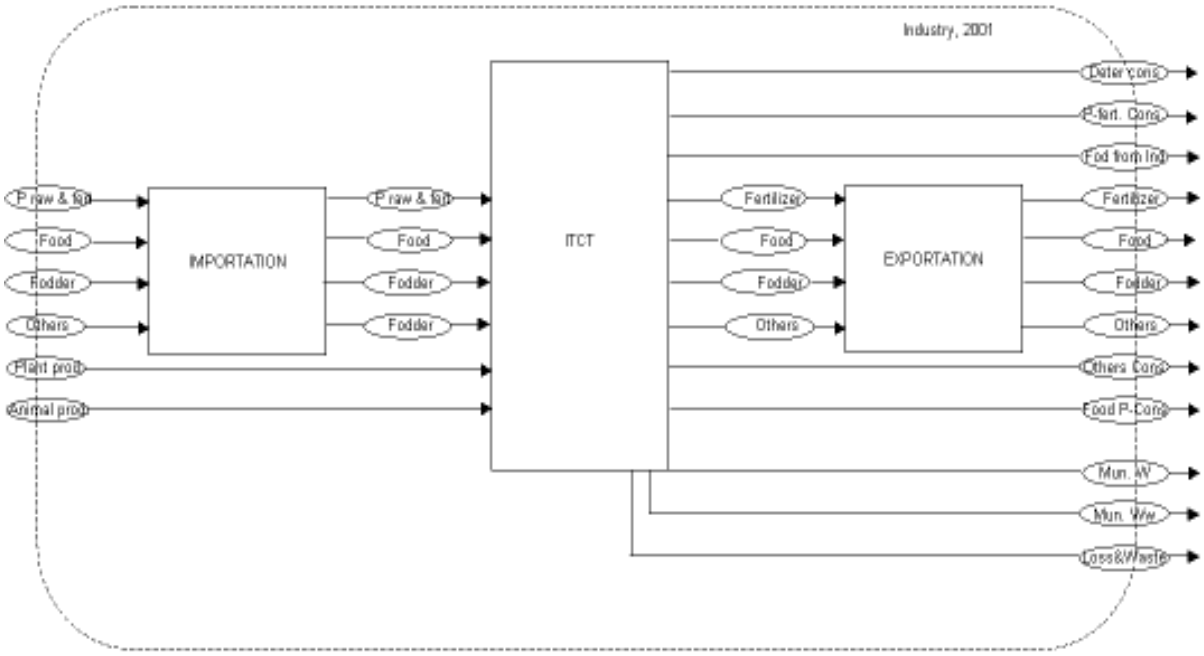

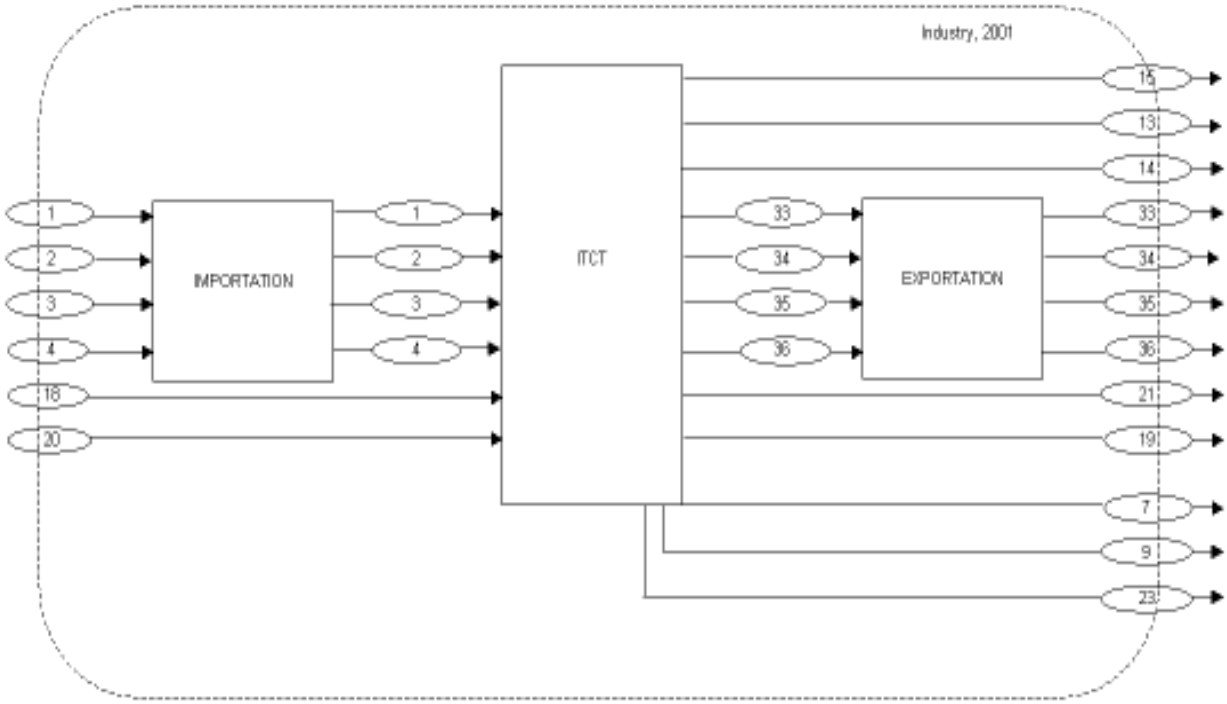

Table 4. Importation

Definition	The Process brings together the P-flows, which are imported into the country and conveys them to the industry			
Input	Originating Process	Input Good	Destination Process	Good Description
	These goods originate abroad. (Foreign trade activities are separate processes, and are not in ITCT)	P raw and fertiliser	Importation	P-rock, P-acid and fertiliser P
		Food	Importation	P in imported food
		Fodders	Importation	P in imported fodder
		Others	Importation	P in certain chemicals
Output	Originating Process	Output Good	Destination Process	Good Description
	Importation	P raw and fertiliser	ITCT	P-rock, P-acid and fertiliser P
	Importation	Food	ITCT	P in imported food
	Importation	Fodders	ITCT	P in imported fodder
	Importation	Others	ITCT	P in certain chemicals

Table 5. Industry

Definition	The manufacturing and inland distribution of P-rich goods, and the consumption out of agriculture and household			
Input	Originating Process	Input Good	Destination Process	Good Description
	Importation	P raw and fertiliser	ITCT	P-rock, P-acid and fertiliser P
	Importation	Food	ITCT	P in imported food
	Importation	Fodders	ITCT	P in imported fodder
	Importation	Others	ITCT	P in certain chemicals
	Agriculture	Plant Products	ITCT	Inland production of plants
	Agriculture	Animal Products	ITCT	Inland production of animal products
Output	Originating Process	Output Good	Destination Process	Good Description
	ITCT	Detergent consumed	Household	From the purchased amounts
	ITCT	P-fertilizer consumed	Agriculture	Enters the agricultural soil
	ITCT	Fodder from industry	Agriculture	Net imports + food industry byproducts
	ITCT	Fertilizer	Exportation	The consumption flows show the amounts after distribution, distribution losses are included in the flow "losses & wastes"
	ITCT	Food	Exportation	
	ITCT	Fodders	Exportation	
	ITCT	Others	Exportation	
	ITCT	Food P consumed	Household	The household consumption, as purchased
	ITCT	Others consumed	Household	P- including goods other than food / detergents
	ITCT	Municipal wastewater	Wastewater management	Wastewater discharged into the sewer system
	ITCT	Wastes & Losses		Positive balance from the industry

Table 6. Exportation

Definition	The process brings together the P-flows, which are exported from the country			
Input	Originating Process	Input Good	Destination Process	Good Description
	ITCT	Fertilizer	Exportation	These goods originate in the country and are sent to abroad (Importation, and exportation activities of the "foreign trade" are considered as separate processes, and not in ITCT)
	ITCT	Food	Exportation	
	ITCT	Fodders	Exportation	
	ITCT	Others	Exportation	
Output	Originating Process	Input Good	Destination Process	
	Exportation	Fertilizer		
	Exportation	Food		
	Exportation	Fodders		
	Exportation	Others		

A3- Subsystem Household

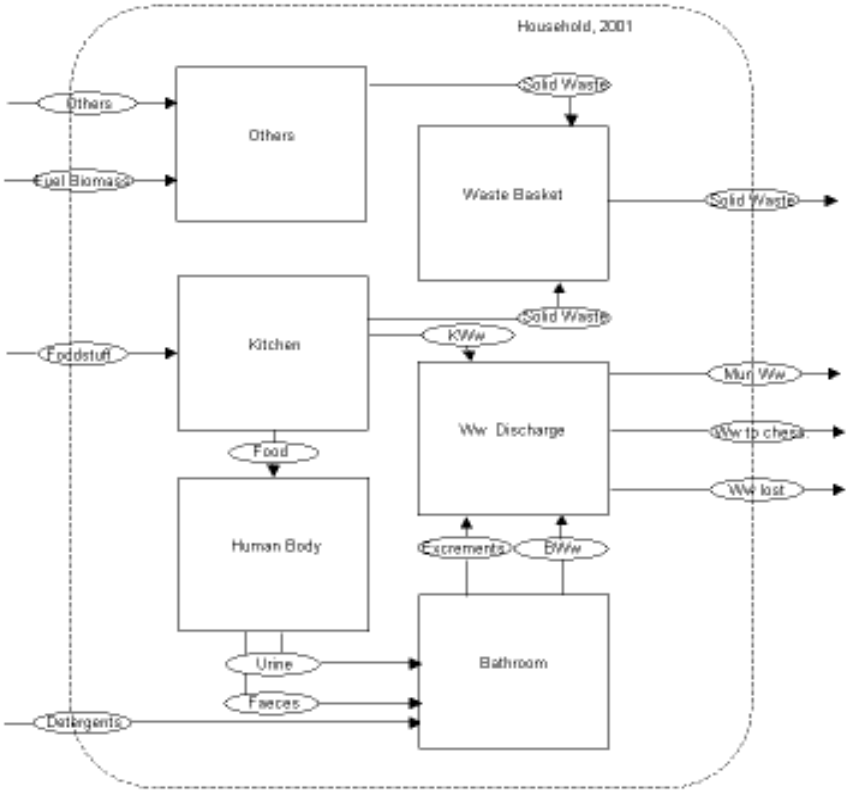

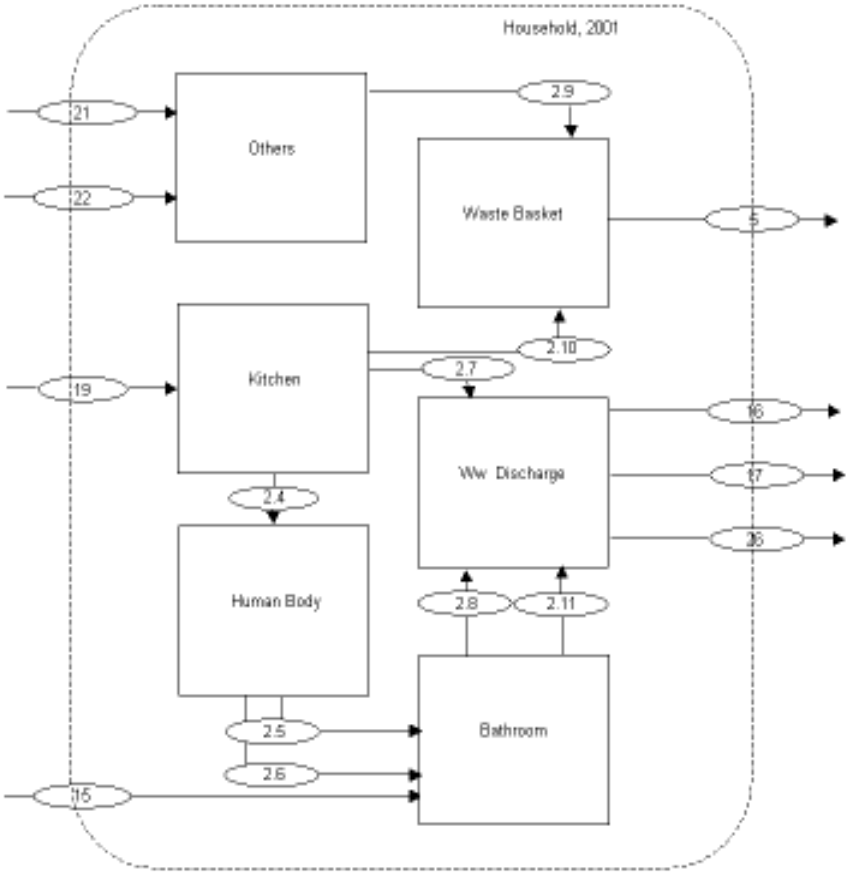

Table 7. Kitchen

Definition	Converts the foodstuff entering the household into prepared food, produces sewage and wastewater			
Input	Originating Process	Input Good	Destination Process	Good Description
	ITCT	Foodstuff	Kitchen	Purchased Food
Output	Originating Process	Output Good	Destination Process	Good Description
	Kitchen	Solid Waste	Waste basket	Organic food waste
	Kitchen	KWw	Wastewater discharge	Grey water
	Kitchen	Food	Human body	Food intake

Table 8. Human Body

Definition	Digests food taken in and converts to excrements			
Input	Originating Process	Input Good	Destination Process	Good Description
	Kitchen	Food	Human Body	Food cleaned and prepared
	Originating Process	Output Good	Destination Process	Good Description
Output	Human Body	Urine	Bathroom	
	Human Body	Faeces	Bathroom	

Table 9. Bathroom

Definition	All toilet facilities, including household cleaning. Collects the excrements and greywater, conveys to the discharge			
Input	Originating Process	Input Good	Destination Process	Good Description
	Human Body	Excrements	Bathroom	Urine and faeces
	Industry	Detergents	Bathroom	All cleaning agents
Output	Originating Process	Output Good	Destination Process	Good Description
	Bathroom	Excrements	Wastewater discharge	
	Bathroom	BWw	Wastewater discharge	Includes dirt and chemicals

Table 10.Wastewater discharge

Definition	All the sinks in household draining liquid wastes to some kind of disposal unit			
Input	Originating Process	Input Good	Destination Process	Good Description
	Bathroom	Excrements	Wastewater discharge	
	Bathroom	BWw	Wastewater discharge	
	Kitchen	KWw	Wastewater discharge	
Output	Originating Process	Output Good	Destination Process	Good Description
	Wastewater discharge	Ww to Chesspit	Chesspit	Locally managed ww
	Wastewater discharge	Municipal ww	Sewer System	Collected ww
	Wastewater discharge	Wastewater lost	Environment	Not collected ww

Table 11. Others

Definition	The consumption of goods including P, other than detergents and foodstuff and conversion thereof into solid waste			
Input	Originating Process	Input Good	Destination Process	Good Description
	Industry	Others	Others	Other cons. Goods
	Agriculture	Fuel Biomass	Others	Manure and plant residues
Output	Originating Process	Output Good	Destination Process	Good Description
	Others	Solid waste	Wastebasket	

Table 12. Waste Basket

Definition	The collection of the solid waste in the household and transfer to the "waste management"			
Input	Originating Process	Input Good	Destination Process	Good Description
	Kitchen	Solid waste	Wastebasket	
	Others	Solid waste	Wastebasket	
Output	Originating Process	Output Good	Destination Process	Good Description
	Wastebasket	Solid waste	Waste Management	

A4- Subsystem Wastewater Management

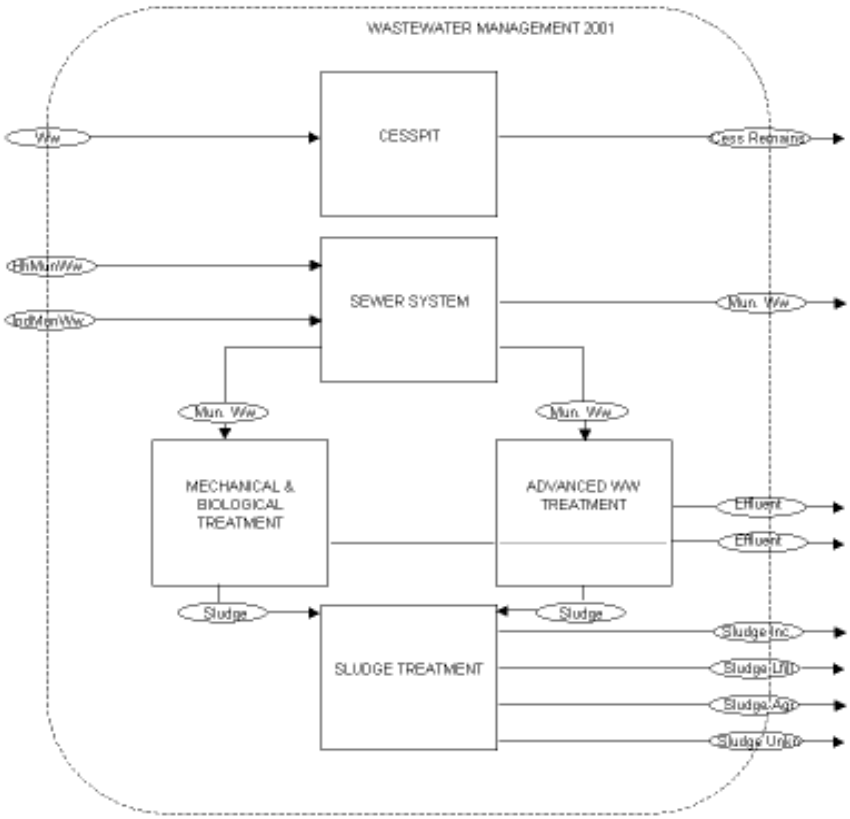

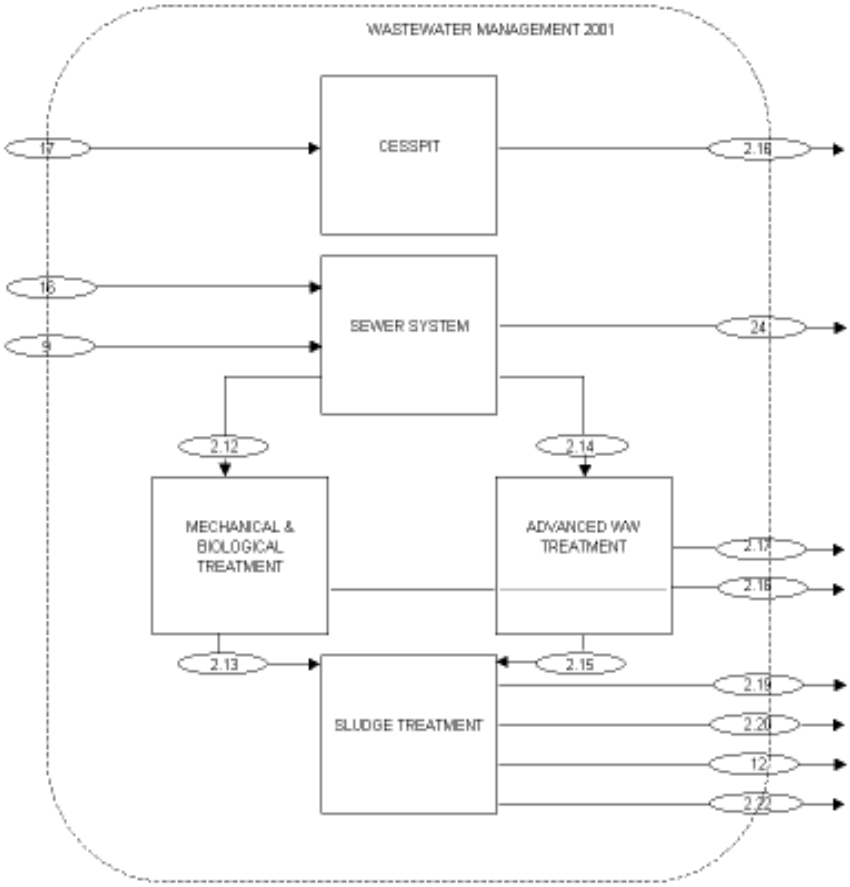

Table 13. Cesspit

Definition	This process involves all municipal wastewaters which do not enter the communal treatment system or directly receiving waters It covers septic tanks, open pits, home treatment plants, sewage injections, and all other treatment/disposal options			
Input	Originating Process	Input Good	Destination Process	Good Description
	Household	Wastewater	Cesspit	Mainly those produced in rural areas
Outpu	Originating Process	Output Good	Destination Process	Good Description
	Cesspit	Cesspit Remainongs	Environmet	

Table 14. Sewer System

Definition	Collects the municipal wastewaters generated in households and "industry" (industry, trade, tourism,...)			
	Transport and Distributionprocess, no leakage, no reduction of the parameter phosphorus assumed.			
Input	Originating Process	Input Good	Destination Process	Good Description
	Household + ITCT	Municipal Wastewater	Sewer System	The portion of ww which can be collected
Output	Originating Process	Output Good	Destination Process	Good Description
	Sewer System	Municipal Wastewater	Receiving Water	Directly discharged
	Sewer System	Municipal Wastewater	Mech./ Biol. Treatment	Undergoes treatment
	Sewer System	Municipal Wastewater	Advanced Ww Treatment	Undergoes treatment

Table 15. Mechanical & Biological Treatment

Definition	Involves mechanical treatment (including pre-treatment for deep sea discharge), and biological treatment			
	Mechanical treatment, treatment for organic substances and nitrification. P-removal: 25 %			
Input	Originating Process	Input Good	Destination Process	Good Description
	Sewer System	Municipal Wastewater	Mech./ Biol. Treatment	Mostly those discharged into sea and deep se
Output	Originating Process	Output Good	Destination Process	Good Description
	Mech./ Biol. Treatment	Sewage Sludge	Sludge Treatment	Sludge with low P-content
	Mech./ Biol. Treatment	Effluent	Receiving water	Effluent with high P-content

Table 16. Advanced Wastewater Treatment

Definition	Involves also phosphorus removal in addition to mechanical and biological treatment			
	Treatment for organic substances, phosphorus, nitrification / denitrification. P-removal: 85 %			
Input	Originating Process	Input Good	Destination Process	Good Description
	Sewer System	Municipal Wastewater	Advanced Ww Treatment	Mostly those discharged into surface waters
Output	Originating Process	Output Good	Destination Process	Good Description
	Advanced Ww Treatment	Sewage Sludge	Sludge Treatment	Sludge with high P-content
	Advanced Ww Treatment	Effluent	Receiving water	Effluent with low P-content

Table 17. Sludge Treatment

Definition	All treatments applied to all kinds of raw sludges, mainly dewatering and stabilization			
Input	Originating Process	Input Good	Destination Process	Good Description
	Mech./ Biol. Treatment	Sewage Sludge	Sludge Treatment	Sludge with low P-content
	Advanced Ww Treatment	Sewage Sludge	Sludge Treatment	Sludge with high P-content
Output	Originating Process	Output Good	Destination Process	Good Description
	Sludge Treatment	Sludge agriculture	Agriculture	Stabilised
	Sludge Treatment	Sludge unknown	Environment	
	Sludge Treatment	Sludge landfill	Disposal	Dewatered, landfilled or dumped
	Sludge Treatment	Sludge incineration	Incineration	Dewatered

A5- Subsystem Waste Management

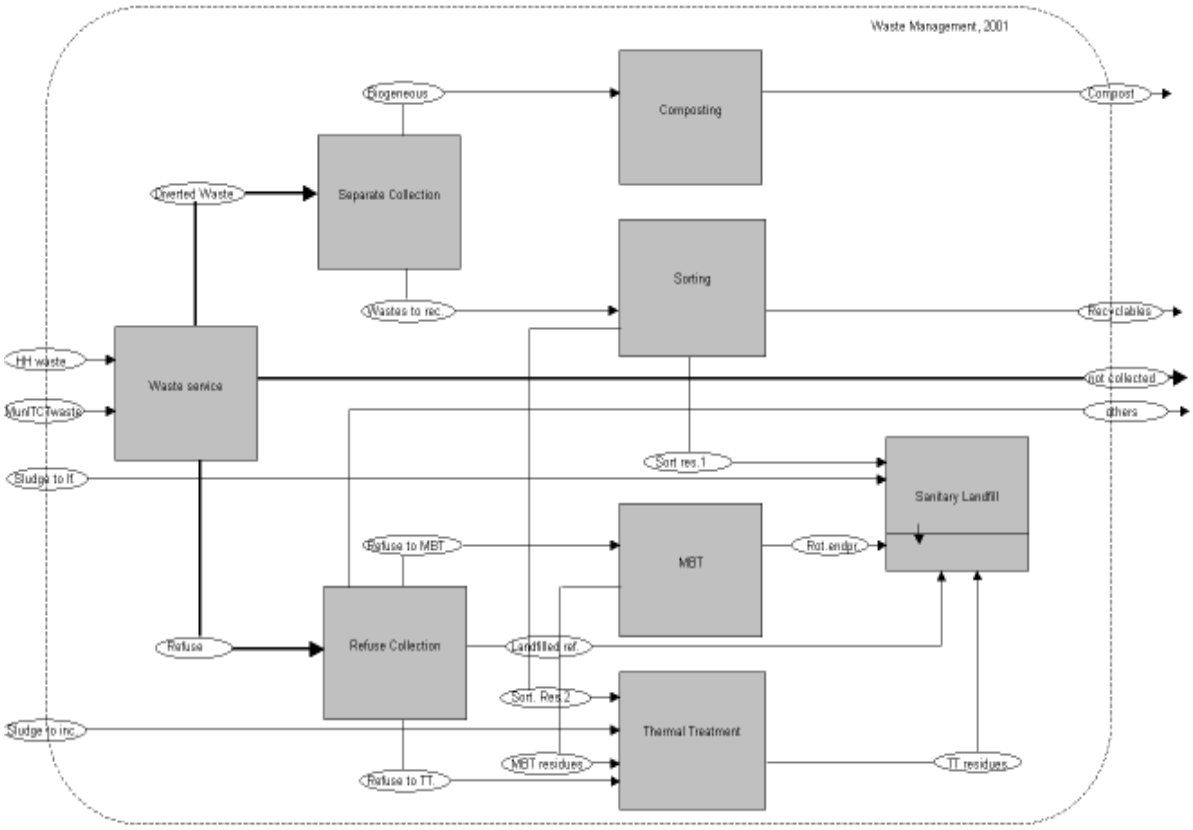

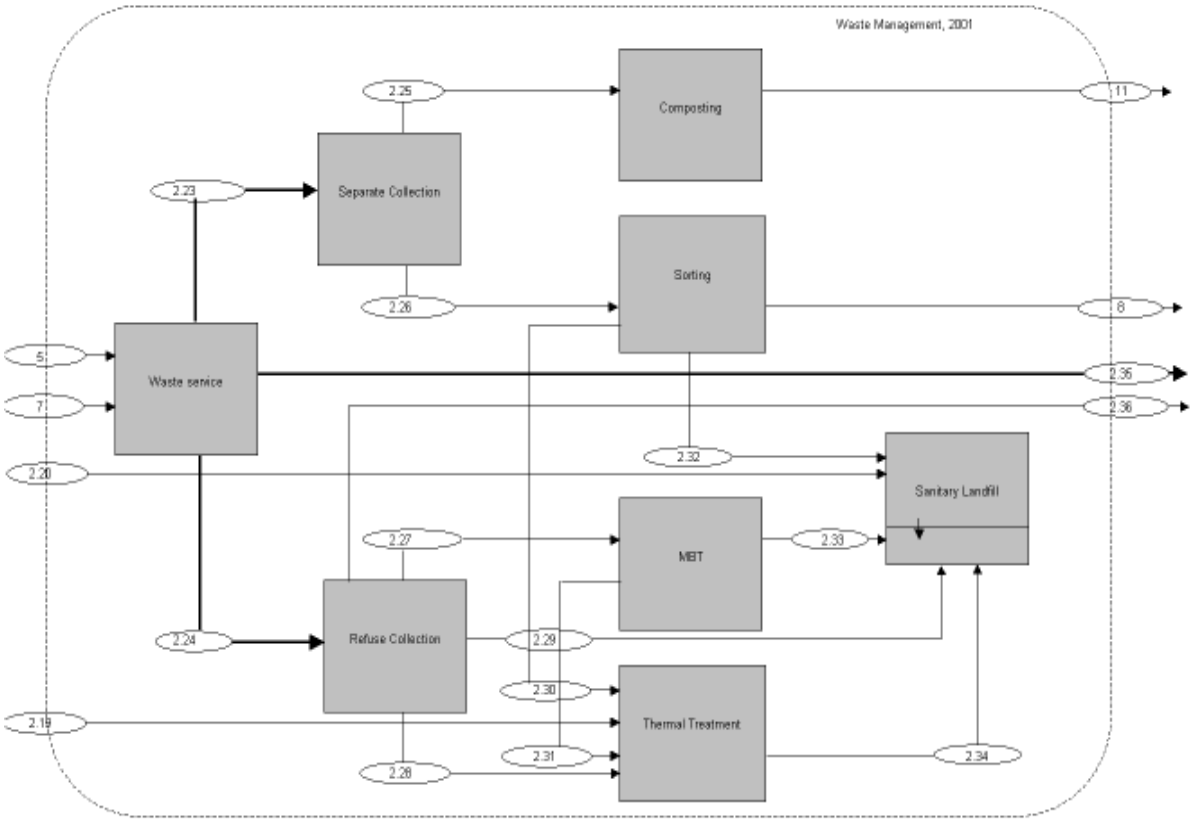

Table .1. Waste Service

Definition	A storage or transportation process, connecting the source of generation to the collection This process also shows the amounts, which are discarded as waste, but are not collected.			
Input	Originating Process	Input Good	Destination Process	Good Description
	ITCT	Municipal ITCT waste	Waste Service	
	Household	Household waste	Waste Service	
Output	Originating Process	Output Good	Destination Process	Good Description
	Waste Removal	Diverted Waste	Separate collection	Waste diverted from the landfill
	Waste Removal	not collected waste	Environment	Waste, which is not managed
	Waste Removal	Refuse	Refuse collection	Waste, which is not separated

Table .2. Refuse Collection

Definition	Collection of waste, which is not separated at source (residual waste in Austria, collects all collected waste in Turkey)			
	The output is waste to be treated or to be disposed of.			
Input	Originating Process	Input Good	Destination Process	Good Description
	Waste Removal	Refuse	Refuse Collection	
Output	Originating Process	Output Good	Destination Process	Good Description
	Refuse Collection	Landfilled Refuse	SanitaryLandfill	
	Refuse Collection	Refuse to MechBiol. Treat.	Mechanical Biological Treat.	
	Refuse Collection	Refuse to Thermal Treat.	Thermal Treatment	
	Refuse Collection	Others	Environment	Only removed but not treated

Table .3. Separate Collection

Definition	The wastes, which can be diverted from the landfill through composting and recycling enter this process			
Input	Originating Process	Input Good	Destination Process	Good Description
	Waste Removal	Diverted Waste	Separate Collection	Glass, paper, metal...
Output	Originating Process	Output Good	Destination Process	Good Description
	Separate Collection	Biogeneous	Composting	Compostable portion
	Separate Collection	Goods to be recycled	Sorting	Glass, paper, metal

Table .4. Mechanical Biological Treatment (MBT)

Definition	Fractionates waste into a decomposable portion and a non-decomposable, combustible portion,			
	by using mechanical separation processes and biological means for the subsequent decomposition.			
Input	Originating Process	Input Good	Destination Process	Good Description
	Refuse Collection	Refuse to MBT	MBT	
Output	Originating Process	Output Good	Destination Process	Good Description
	MBT	MBT Residues	Thermal Treatment	Combustible portion
	MBT	Rotting endproducts	Sanitary Landfill	Decomposed portion

Table .5. Thermal Treatment

Definition	Incineration of certain waste flows with the purposes of stabilization, volume reduction, sterilization and so on.			
Input	Originating Process	Input Good	Destination Process	Good Description
	Sorting	Sorting Residues 2	Thermal Treatment	
	Sludge Treatment	Sludge to incineration	Thermal Treatment	Co-incineration with waste
	MBT	MBT Residues	Thermal Treatment	Combustible MBT product
	Refuse Collection	Refuse to Thermal Treatmen	Thermal Treatment	
Output	Originating Process	Output Good	Destination Process	Good Description
	Thermal Treatment	Thermal Treatment Residues	Sanitary Landfill	Ashes

Table .6. Sanitary Landfill

Definition	Final storage for waste collection and treatment residues			
Input	Originating Process	Input Good	Destination Process	Good Description
	Sorting	Sorting Residues 1	Sanitary Landfill	
	Sludge Treatment	Sludge to Landfill	Sanitary Landfill	
	MBT	Rotting endproducts	Sanitary Landfill	
	Refuse Collection	Landfilled Refuse	Sanitary Landfill	
	Thermal Treatment	Thermal Treatment Residues	Sanitary Landfill	

A6- The Region

6 = 2.20 +2.19
27 = 2.16 +2.22
25 = 2.17 +2.18
28 = 2.35 +2.36

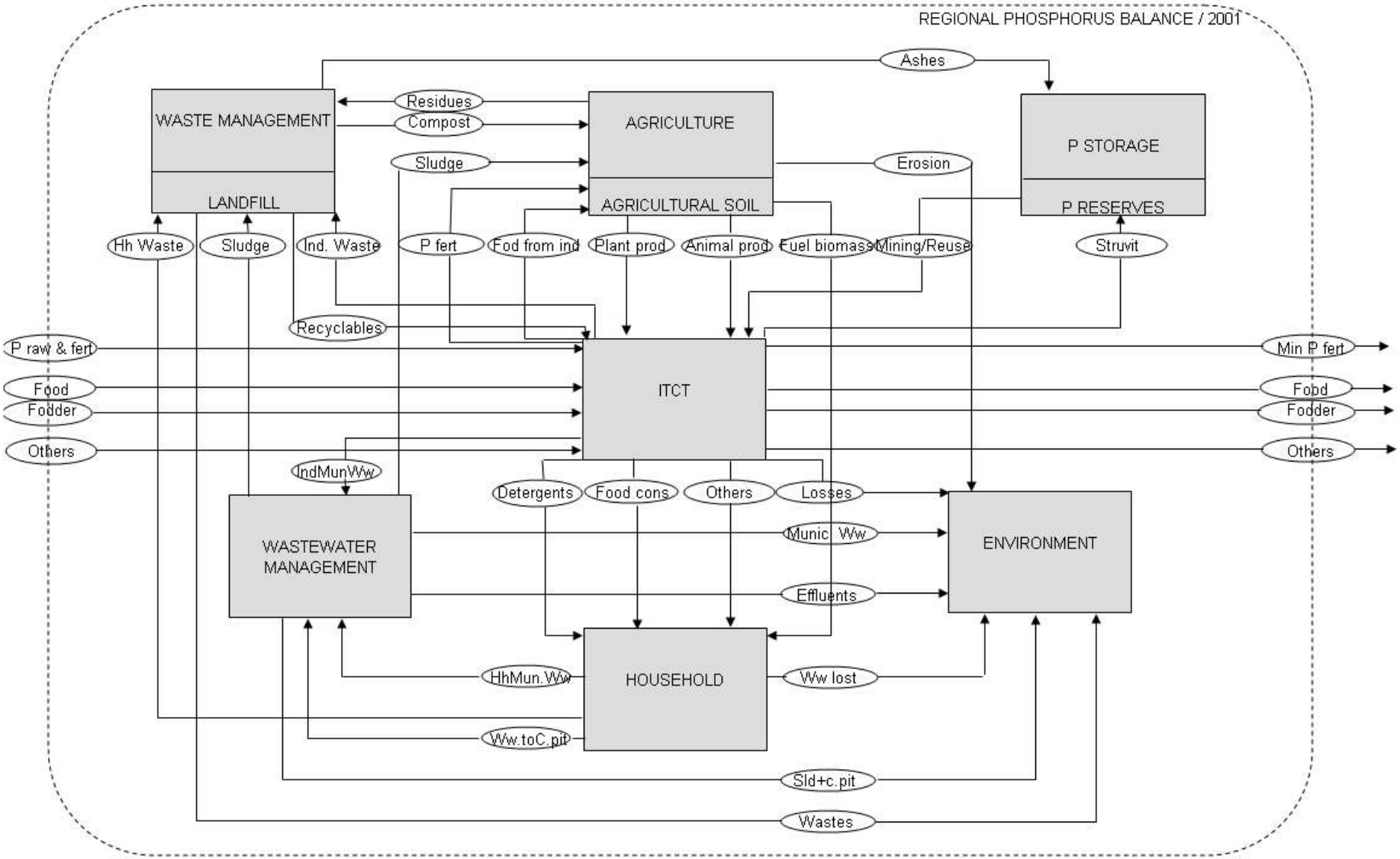
REGIONAL PHOSPHORUS BALANCE / 2001
Ashes
WASTE MANAGEMENT
LANDFILL
Residues
Compost
AGRICULTURE
AGRICULTURAL SOIL
Sludge
Erosion
P STORAGE
P RESERVES
Hh Waste
Sludge
Ind. Waste
P fert
Fod from ind
Plant prod
Animal prod
Fuel biomass
Mining/Reuse
Struvit
Recyclables
P raw & fert
Food
Fodder
Others
ITCT
Min P fert
Food
Fodder
Others
IndMunWw
Detergents
Food cons
Others
Losses
WASTEWATER MANAGEMENT
Munic. Ww
Effluents
ENVIRONMENT
HhMun.Ww
HOUSEHOLD
Ww lost
Ww.toC.pit
Sld+c.pit
Wastes

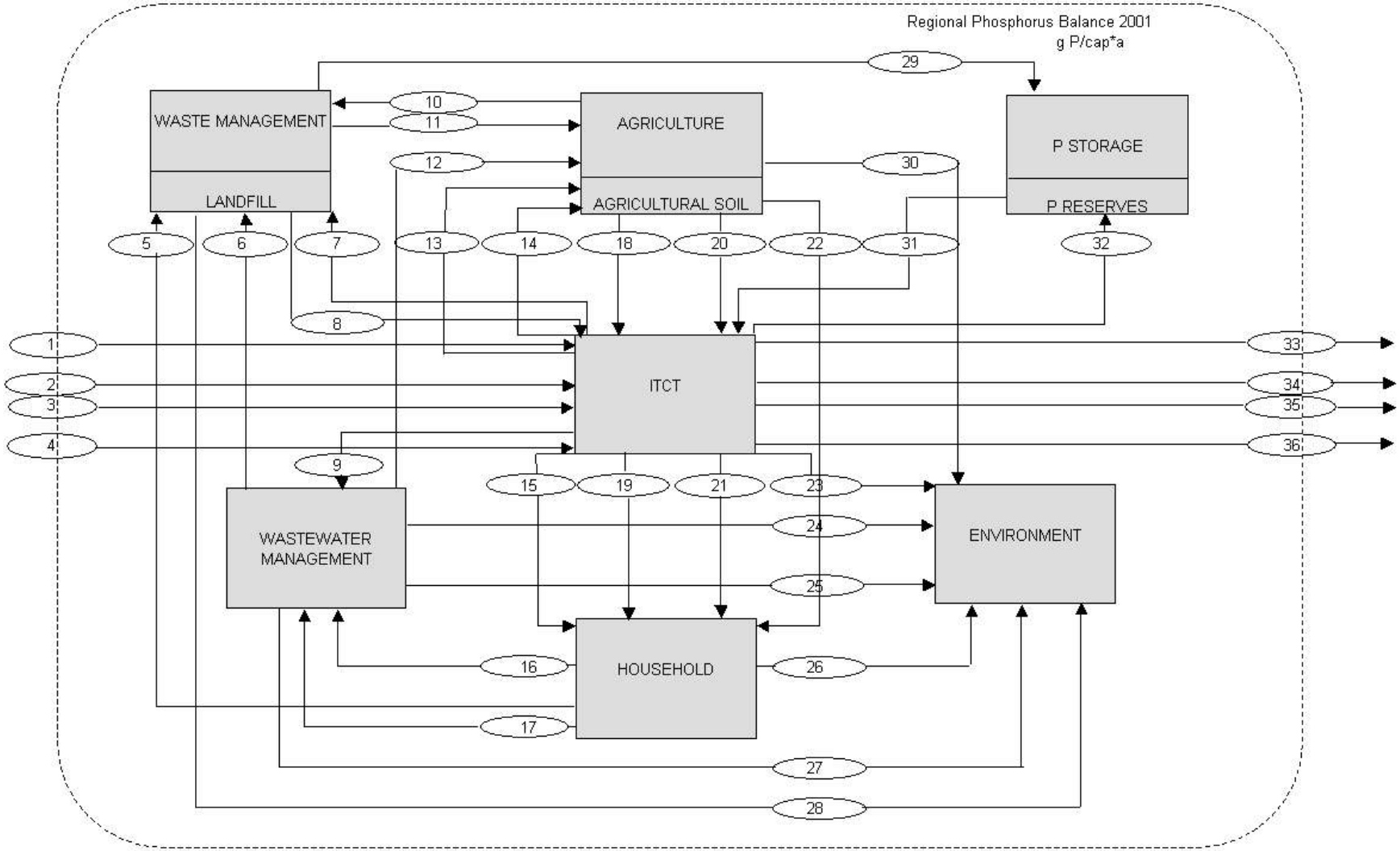
Regional Phosphorus Balance 2001
g P/cap*a
WASTE MANAGEMENT
LANDFILL
AGRICULTURE
AGRICULTURAL SOIL
P STORAGE
P RESERVES
ITCT
WASTEWATER MANAGEMENT
ENVIRONMENT
HOUSEHOLD
1
2
3
4
5
6
7
8
9
10
11
12
13
14
15
16
17
18
19
20
21
22
23
24
25
26
27
28
29
30
31
32
33
34
35
36

APPENDIX B: SCENARIO CALCULATIONS

The calculation of the new flows, marked with a hyphen (’), is listed below using the flow numbers, shown in *italics*.

<u>Determination of the flows and stocks under Scenario 1:</u>

1. Reducing the erosion by half, no sludge application on agricultural land

	TR:	AT:
30’ = 0.5 * *30*	500	600
12’ = 0	0	0

2. Internalising hinterland production by producing food and fodder inland: Harvesting the amount *2.1’* instead of *2.1* from agricultural soil. Import structure is changed in order to import only the raw material (P-rock, 1’). Additional pollution caused by producing the ‘other goods’ inland is treated

	TR:	AT:
2.1’ = 2.1 + 2 + 3	2950	7100
9’ = 9 + 4’ * 0,1	165	560
2’ = 3’ = 4’ = 0		

3. Collection and treatment of municipal wastewater

	TR:	AT:
16’ = 16 + 26 + 24	1300	550
25’ = 0.15 * (*9’ + 16’*)	220	170
6’ = 0.85 * (*16’ + 9’*)	1250	950
24’ = 26’ = 0		

4. Cesspit residues and ITCT wastes and losses are controlled and sent to waste management along with household and industrial wastes (*5* and *7*) in final storage quality. All waste and sludge are sent to waste management

	TR:	AT:
5’ = 5 + 17 + 2.36	1525	310

7’ = 7 + 23	720	1150

5’ + 6’ + 7’ : disposed of in controlled sinks

23’ = 27’ = 2.35’ = 2.36’ = 28’ = 0

5. Balancing the agricultural soil by adjusting the fertilizer addition; estimating the necessary raw material import under these conditions by balancing the process production and consumption.

	TR:	AT:
13’ = (*2.1’ + 30’*) - (*2.2 + 11 + 12’*)	3000	2950

2.1’ + 1’ = (*33+34+35+36*) + (*2.2+13’*) + (*9’+16'+17*) + (*5’+7'*)

1’ =	4735	6920

After re-balancing the systems the stocks are also calculated.

S_1 = 0		
S_2 = *30’ + 23’ + 26’ + 2.35’ + 24’ + 25’ + 27’ + 2.36’*	720	770
S_3 = *(9’+16'+17)+(5’+7') –(29+25'+11+12)*	3715	2250

<u>Determination of the flows and stocks under Scenario 2:</u>

1. Reducing the exports to zero

   33''=34''=35''=36''= 0

2. Reducing the agricultural production (*2.1”*) as harvested P, to subsistence levels

	TR:	AT:
18”	480	240
20”	240	720
2.1” = 18” + 20” /0.2	1680	3840

3. Bringing all manure back on agricultural soil (*2.2”*). Part of the harvested P serves as fodder and a fraction of this is converted to manure. The remaining amount in harvested P is consumed which end up in waste (*5”*) and wastewater (*16”*)

	TR:	AT:
2.2” = 20” /0.2 -*20”*	960	2880
2.1”- 2.2” = 16”+ 5”	720	960
17” = 9” = 7” = 0		

4. Collecting the P in wastewater, which is reduced to (urine + faeces), treating the wastewater for phosphorus ending up with the P-rich sludge (*6”*)

	TR:	AT:
16” = 2.5 + 2.6	600	600
25’’ = 0.15 * (*16”*)	100	100
6” = 0.85 * (*16’’*)	500	500

5. Collecting and managing the waste (mainly from animal production); Compost is no more available

	TR:	AT:
16”+ 5” (above)	720	960
16” (above)	600	600
5”	120	360
11”	0	0

6. Determining the secondary resource potential in sludge and wastes (animal bone meal)

	TR:	AT:
29” = 6”+ 5”/2	560	680

7. Determining the amount of the import which brings about the subsistence scheme above:

	TR:	AT:
13" = (2.1” + 30’)-(13” + 2.2” + 11” + 12’)	1220	1560
1"= (2.2"+13")+5"+16"-2.1"	1220	1560

Determination of the flows and stocks under Scenario 3:

1. Importing P: Here the imports are assumed to be reduced down to 300 g/cap*a

	TR:	AT:
1'''	300	300

2. Fertilizer application on the agricultural soil as much as imported, harvest the dietary requirement.

13'''	300	300
2.1'''	400	400

3. Control the erosion of P, which is also naturally reduced due to lower soil P-concentration: Assumed to be reduced by half once again.

30'''	300	300

4. Direct consumption, vegan diet

2.4''' = 2.1'''	400	400

5. Collection and management of all wastes: TC to waste 0.1 to wastewater 0.9. Advanced wastewater treatment at 85%

16'''	360	360
5'''	40	40
*25'' = 0,15*16'''*	54	54
6''' = 16'''-25''	306	306

6. Storing the recoverable potential: Mono-incineration drawing almost all P:

29''' = 6'''	300	300

DEMET SEYHAN

Mittersteig 11/9 1040
Wien AUSTRIA
Tel: +43-1-581 2391
Fax: +49-89-1588-200665
e-mail: d.seyhan@gmail.com

PERSONAL DETAILS:

Date/Place of Birth: 09.06.1976 / Istanbul, Turkey

Marital Status: Single

EDUCATION:

2002 – 2006	PhD., Vienna Technical University, Civil Engineering Faculty
1999 – 2002	MS., Bogazici University, Institute of Environmental Sciences
1994 – 1999	BSc., Istanbul Technical University, Faculty of Civil Engineering Department of Environmental Engineering
1987 – 1994	Cagaloglu Anadolu Lisesi (Gymnasium)

EXPERIENCE:

May 2006 -	Vienna Technical University, Institute for Water Quality, Resources and Waste Management; Research Assistant
2002 – 2006	Vienna Technical University, Scholarshipholder of the Austrian Government and Guest Researcher at the Institute for Water Quality and Waste Management
2000 – 2002	Bogazici University, Inst. of Environmental Sciences; Research Assistant
1998 - 1999	(2 Semesters) Istanbul Technical University, Department of Environmental Engineering; Part-time Student in a Research Project on Biological Excess Phosphorus Removal

DEMET SEYHAN

(212) 322 64 80

Çamlık C. Dolunay S. Yıldız A.

9/11 Göktürk İstanbul

e-mail: d.seyhan@gmail.com

EDUCATION

Vienna Technical University, Civil Engineering Faculty

PhD in Waste and Resources Management, 2006

Boğaziçi University, Institute of Environmental Sciences

MSc in Environmental Sciences, 2002

İstanbul Technical University, Faculty of Civil Engineering, Department of Environmental Engineering

BSc in Environmental Engineering, 1999

Cağaloğlu Anadolu Lisesi

Gymnasium, 1994

EXPERIENCE

Wageningen University, Faculty of Social Sciences, Environmental Economics and Natural Resources Group

Post-doc researcher 2007 - 2009

Learning and applying non-renewable resource economics; research paper “An economic model of long-term phosphorus extraction and recycling” in social sciences, first resource-specific theoretical approach in the area of economics; brand new perspective into the “valuation” of natural resources; attending courses at various European universities; publication of two further papers; advising one graduation thesis; assisting one lecture on environmental policy.

Vienna Technical University, Institute for Water Quality, Resources and Waste Management

Research assistant 2006 - 2007

Project SUSAN, “Sustainable and Safe Re-use of Municipal Sewage Sludge for Nutrient Recovery”, establishing the system of data collection for a Europe-wide regional phosphorus balance.

Vienna Technical University

Scholarship-holder of the Austrian Government and guest researcher at the Institute for Water Quality and Waste Management 2002 - 2006

PhD thesis, “Development of a method for the regional management and long-term use of non-renewable resources: The case for the essential resource phosphorus”
Investigating phosphorus metabolisms of Turkey and Austria; the country-wide model for phosphorus flows; an evaluation of regional stocks; first-time balancing of the flows with their uncertainties; resource-specific indicators for depletion and pollution for phosphorus, scenario analyses.

Boğaziçi University, Institute of Environmental Sciences

Research assistant 2000 - 2002

MSc thesis, “Agricultural use of biological phosphorus removal sludges”
Assistance; lab work for a self-developed project, from research questions and pot experiments down to soil, sludge, plant tissue analyses; publication of two research papers; presentation at international conferences.

İstanbul Technical University, Department of Environmental Engineering

Part-time student in a research project 1998 - 1999

Graduation project, “Investigation on the nitrification potential of biological phosphorus removal bacteria”; monitoring of a lab-scale biological phosphorus removal reactor.

LANGUAGE SKILLS

Turkish native speaker, German fluent, English excellent, French beginner

SCIENTIFIC MEETINGS

Presentations at International Conferences

IWA Conference “From Nutrient Removal to Recovery”, held at Aquatech 2002, Amsterdam, The Netherlands, 2-4 October 2002
“Effect of lime stabilisation of enhanced biological phosphorus removal sludges on the phosphorus availability to plants”

ISWA Congress: International Solid Waste Association World Environment Congress and Exhibition – “Appropriate environmental and solid waste

management and technologies for developing countries", Istanbul, 8-12 July 2002
"Agricultural use of municipal wastewater sludges: phosphorus availability of biological excess phosphorus removal sludges."

IWA International Specialised Conference on Small Water and Wastewater Treatment Systems, Istanbul, 23-25 September 2002
"Plant availability of heavy metals and phosphorus in the agricultural reuse of biological sludges"

ESEE 8th International Conference of the European Society for Ecological Economics, 29 Sept – 2 Oct 2009, University of Ljubljana, Slovenia
"Long-term Use of Phosphorus: Essentiality and Recycling"

Participated Meetings and Trainings

- Symposium "Rückgewinnung von Phosphor in der Landwirtschaft und aus Abwasser und Abfall", Berlin, 2003
- ConAccount Workshop "Quo vadis MFA?", Wuppertal, 2003
- Forum "Was Sie schon immer über P-Düngung wissen wollten!", Braunschweig, FAL, Institut für Pflanzenernährung und Bodenkunde, 2003
- Postgraduate School of Industrial Ecology, "Environmental System Analysis" / "Value Chain Analysis", Bratislava, Prague, Guildford, 2007
- Summer School in Applied Economics, Department of Economics and Quantitative Methods of the University of Lecce (Italy), 2007
- P.M.I. Project Management Certification Program, İstanbul, 2009

PUBLICATIONS

1. D. Seyhan and A. Erdincler, "Effect of lime stabilisation of enhanced biological phosphorus removal sludges on the phosphorus availability to plants", **Water Science and Technology** 2003**, Vol.48, No 1, pp 155–162.**
2. D. Seyhan and A. Erdincler, "Plant availability of heavy metals and phosphorus in the agricultural reuse of biological sludges", **Journal of Environmental Science and Health** 2003, Part A—Toxic/Hazardous Substances & Environmental Engineering , Vol. 38, pp 2413 – 2423.
3. H.P. Weikard and D. Seyhan, "Distribution of phosphorus resources between rich and poor countries: The effect of recycling". **Ecological Economics** 2009; 68, 1749-1755.
4. D. Seyhan, "Country-scale phosphorus balancing as a base for resources conservation". **Resources Conservation and Recycling** 2009: 53, no12, pp. 698-709.
5. D. Seyhan, H.P. Weikard and van Ierland E., "An economic model of long-term phosphorus extraction and recycling." **Resources Conservation and Recycling** 2012: 61, no 4, pp. 103 - 108.

HONORS

1. Conference Support for IWA Amsterdam by **TÜBİTAK**, the Scientific and Technological Research Council of Turkey, 2002
2. PhD Scholarship in Vienna, Austria by **ÖAD**, the Austrian Exchange Service, 2002-2005, 36 months
3. Research Fellowship in Wageningen, Holland by Wageningen University, **WIMEK** research fellowship, 2005, 6 months
4. Marie Curie Intra-European Fellowship, by the **European Commission**, 2007-2009, 24 months