T.C.
MARMARA UNIVERSITY
INSTITUTE FOR GRADUATE STUDIES IN
PURE AND APPLIED SCIENCES

DESIGN AND PRODUCTION OF A WELDING ROBOT

Fatih ARI

THESIS

FOR THE DEGREE OF MASTER OF SCIENCE

IN

MECHANICAL ENGINEERING

SUPERVISOR

Assistant Professor Dr. Bülent EKİCİ

İSTANBUL 2008

T.C.
MARMARA UNIVERSITY
INSTITUTE FOR GRADUATE STUDIES IN
PURE AND APPLIED SCIENCES

DESIGN AND PRODUCTION OF A WELDING ROBOT

Fatih ARI
(141101820050002)

THESIS

FOR THE DEGREE OF MASTER OF SCIENCE

IN

MECHANICAL ENGINEERING

SUPERVISOR
Assistant Professor Dr. Bülent EKİCİ

İSTANBUL 2008

MARMARA UNIVERSITY
THE INSTITUTE FOR
GRADUATE STUDIES IN PURE AND APPLIED SCIENCES

ACCEPTANCE AND APPROVAL DOCUMENT

The jury established by the Executive Board of the *INSTITUTE FOR GRADUATE STUDIES IN PURE AND APPLIED SCIENCES* on 07.07.2008 (Resolution no:2008/17-35) has accepted Mr Fatih ARI's thesis titled "DESIGN AND PRODUCTION OF A WELDING ROBOT" as Master of Science thesis in Mechanical Engineering.

Advisor : Yrd. Doç. Dr. Bülent EKİCİ
1. Member of the jury: Prof. Dr. Mustafa KURT
2. Member of the jury: Yrd. Doç. Dr. Haluk KÜÇÜK

Date : 29.07.2008

APPROVAL

Mr..... has satisfactorily completed the requirements for the degree of Master of Science in ..... at Marmara University. The Executive Commitee approves that he is granted the degree of Master of Science on…….. (Resolution no: .....)

DIRECTOR OF THE INSTITUTE
Prof Dr. Sevil ÜNAL

ACKNOWLEDGEMENT

First and foremost, I would like to express my indebtedness to my supervisor Dr. Bülent EKİCİ for his support, contributions and guidance throughout this Project. Without his help, none of this had been possible.

I wish also express my appreciations to several people, who are my colleagues, for their help and support during the project about any subject of the study.

I am deeply grateful to Öncü BENTÜRK who has contributed his knowledge and expertise in helping me to make this study.

Finally, I would like to take this opportunity to express my gratitude to my wife for all her support and understanding during this time.

JUNE 2008 **Fatih ARI**

CONTENTS

ACKNOWLEDGEMENT……...i

CONTENTS……ii

ÖZET……...……..…….....v

ABSTRACT……....vi

ABBREVIATIONS……...…….……..…...vii

LIST OF FIGURES…….……..viii

LIST OF TABLES……..…….…..x

CHAPTER I. INTRODUCTION AND AIM…….……1

CHAPTER II. GENERAL BACKGROUND…….....……2

II.1 LITERATURE SUMMARIES……..……..……...2

II.2 WELDING……...…3

II.2.1 History of Welding…….4

II.2.2 Welding Processes…….....7

II.2.2.1 Arc Welding……...…..7

II.2.2.2 Gas Welding…….....10

II.2.2.3 Resistance Welding…….…….....11

II.2.2.4 Energy Beam Welding…….……...11

II.2.2.5 Solid-state Welding……12

II.2.3 Cost And Trends……...12

II.3 ROBOT WELDING……..14

II.3.1 When Should Robots Be used for Welding……..15

II.3.2 Why Robot Welding……15

II.4 CONTROL SYSTEM……15

II.4.1 Numerical Control……....15

II.4.1.1 Historical Notes……..16

II.4.1.2 Today……..……18

II.4.1.3 Motion Control……...……18

II.4.2 Stepper Motor Basics……....…….…20

II.4.2.1 Technical Description……..……20
II.4.2.2 Stepper Motor Types……....22
Variable Reluctance (VR).....22
Permanent Magnet (PM)…….……22
Hybrid (HB)……23
II.4.3 Coil Excitation Types…….....23
II.4.3.1 Unipolar Stepper Motors……..…...24
II.4.3.2 Bipolar Stepper Motors……25
II.4.4 Stepper Motor Drive Sequences……..27
II.4.5 Stepper Motor Control……27
II.4.5.1 Modes……...28
Full-Step……..28
Half-Step……28
Micro-Step……..28
CHAPTER III. DESIGN AND PRODUCTION OF THE WELDING ROBOT ……...……...30
III.1 X AND Y AXES OF THE ROBOT……....31
III.2 Z AXIS OF THE ROBOT……..……32
III.2.1 Calculations For Z Step Motor……33
III.3 DESIGN OF SOME PARTICULAR COMPONENTS……37
III.3.1 Step Motor Holders……..37
III.3.2 Welding Torch Holder……37
III.3.3 Limit And Home Switches Holder……..…….38
III.3.4 Belt Pulley Holder……38
III.4 ELECTRONIC COMPONENTS OF THE ROBOT……39
III.4.1 Stepper Motor Drivers and Serial Port Interface…….…….40
III.4.1.1M2MD806 Stepper Motor Driver ……..40
III.4.2 Software ……..……....41
III.4.3 DeskCNC 2nd Generation Controller Board……42
III.4.4 Limit and Home Switches……..……..43
CHAPTER IV. RESULTS AND DISCUSSIONS……...…….…...44
CHAPTER V. CONCLUDING REMARKS AND …….…….. **RECOMMENDATIONS**……...….…….....47

REFERENCES……..…..…..49
CURRICULUM VITAE……...…….....51

ÖZET

KAYNAK ROBOTU TASARIMI VE İMALATI

Bu çalışmanın amacı üç eksenli nümerik kontrollü bir kartezyen kaynak robotunun tasarımını ve imalatını gerçekleştirmektir. Nümerik kontrollü sistemlerin makine mi yoksa robot mu olduğu hala tartışma konusu olmasıyla birlikte, bu çalışma boyunca robot kelimesi kullanılacaktır.

Çalışmanın ikinci bölümünde, tarihleriyle birlikte kaynak metotları sunulmuş ve robotik kaynak teknolojisi hakkında kısa bilgiler verilmiştir. Tasarlanan robot nümerik olarak kontrol edilecektir. X, Y ve Z yönlerindeki temel hareketler için 3 hareket kaynağına ihtiyaç vardır. Hareket kaynağı olarak uygun maliyet ve hassasiyet özelliğinden dolayı step motorlar seçilmiştir. İmalat aşamasından önce nümerik kontrol prensipleri açıklanmış ve step motorlar hakkında temel bilgiler ayrıntılı olarak açıklanmıştır.

Mekanik aksamların ön dizaynları CAD yazılımı ("Solidworks") yardımıyla gerçekleştirilmiş ve üretim aşamasında, yapılan ön tasarıma uygun olarak imalat gerçekleştirilmiştir. Tasarım aşamasının ardından ilk olarak mekanik aksamlar için gereken desteğin sağlanması amacıyla bir adet şase üretilmiştir. Tasarlanan robotun bazı mekanik parçaları özel olarak üretilmiş, bazıları da standart parçalar olduklarından dolayı kullanıma hazır olarak tedarik edilmişlerdir ve üretilen şase üzerine monte edilmişlerdir.

Kaynak robotunun tahrik sistemi üç adet step motor tarafından beslenmektedir. Bu üç adet step motor seri port çıkışlı kontrol kartı vasıtasıyla step motor sürücüleri tarafından kontrol edilmektedirler. Bunların yanında sabit DC voltajı üretimi için üç adet güç kaynağı kullanılmıştır. Kontrol kartlarının ve güç kaynaklarının panoya montajının ardından, adım miktarını ve yön tayinini belirleyecek sinyalleri seri port vasıtasıyla üretmek amacıyla MARELCNC programı kullanılmıştır.

Üç eksenin hareketi için yapılan deneme sürüşlerinin ardından kaynak torcu için bir adet kavrama aparatı tasarlanmış ve üretimi yapılmıştır. Çalışmanın son adımı kaynak torcu aparatının torçla beraber kafa kısmına monte edilmesidir. Bu adımın da gerçekleştirilmesinin ardından kaynak robotunun kaynak denemeleri yapılmış ve başarılı sonuçlar elde edilmiştir.

Haziran 2008 **Fatih ARI**

ABSTRACT

DESIGN AND PRODUCTION OF A WELDING ROBOT

The aim of this study is to design and produce a computer-based numerically-controlled three-axes Cartesian coordinate welding robot. Though it is still not certain whether the numeric controlled systems can be nominated as machines or robots, the word robot will be used throughout this project.

In the second chapter, the welding methods along with their history are presented and general information about robotic welding technology is given briefly.

The designed robot will be numerically controlled. For the head moves in X, Y and Z directions, three motion sources are needed. Step motors are chosen as motion sources because of their suitable cost and accuracy range. Numerical control principles and basic information about step motors are explained in detail before the manufacturing phase.

Preliminary design of the mechanical components is made by CAD software (Solidworks) and during the manufacturing phase, the robot is manufactured in line with the preliminary design. After the design of the robot, the chassis is manufactured in order to ensure the required support to the mechanical components. Certain mechanical components of the designed robot are individually manufactured and some others are procured ready-made since they are standard parts. Finally they are mounted on the chassis.

The actuation system of the welding robot is fed by three step motors. These three are controlled by step motor drivers via serial port interface card. Besides three power supply units are used for stable DC voltage generation. After the installation of controller units and power unit to a switch cabinet, MARELCNC program was used to generate signals of direction and step amount on the serial port.

After having good results from the test runs of the robot, a holding component for the welding torch was designed and produced. The last step of the design was to mount the component on the head unit. After this step, test runs of welding robot were done with satisfactory results.

June 2008 **Fatih ARI**

ABBREVIATIONS

SMAW : Shielded Metal Arc Welding
MMA : Manual Metal Arc Welding
CO2 : Carbon Dioxide
DC : Direct Current
AC : Alternating Current
GMAW : Gas Metal Arc Welding
FCAW : Flux-Cored Arc Welding
GTAW : Gas Tungsten Arc Welding
TIG : Tungsten Inert Gas
SAW : Submerged Arc Welding
NC : Numerical Control
CNC : Computer Numerical Control
CAD : Computer Aided Design
CAM : Computer Aided Manufacturing
MIT : Massachusetts Institute of Technology
ASCII : American Standard Code for Information Interchange
PLC : Programmable Logic Controller
CW : Clockwise
CCW :Counter Clockwise
PWM : Pulse With Modulation

LIST OF FIGURES

PAGE NUMBER

Figure II.1 Arc Welding……..…3
Figure II.2 Iron Pillar Of Delhi……..……...4
Figure II.3 Shielded Metal Arc Welding…….……..……..8
Figure II.4 Spot Welder…….……11
Figure II.5 Industrial Robots Welding A Car In A Production Line ….……..…….14
Figure II.6 A Conventional Machine's Slide Moved By Turning The Handwheel...19
Figure II.7 A CNC Machine Takes The Commands From The CNC Program …...19
Figure II.8 Construction Of A Stepper Motor…..…..……20
Figure II.9 Variable Reluctance Motor……..……22
Figure II.10 Permanent Magnet Motor……..……23
Figure II.11 Hybrid Motor……..……...23
Figure II.12 6-Wire Unipolar Stepper Motor…….……...24
Figure II.13 Reversal Of Current In One Coil Of A Unipolar Stepper Motor……..24
Figure II.14 Unipolar Drive Sequence…….…….25
Figure II.15 4-Wire Bipolar Stepper…….…….25
Figure II.16 Bipolar Drive Sequence…….…...…..…26
Figure II.17 Conception Of H-Bridge Circuit…….…….….……26
Figure II.18 Typical Step Motor System……..……..……..27
Figure III.1 General View Of The Preliminary Design Made By CAD Techniques31
Figure III.2 X Y Axes Including The Components Used On 32
Figure III.3 General View Of The Z Axis Of Preliminary Design……...…...33
Figure III.4 Load Power Screw Relation…….……..…….....34
Figure III.5 Reactive Forces……...…...……....34
Figure III.6 Illustration Of The Forces….……..…….……..35
Figure III.7 X and Y Axis Step Motor Holders. ……...…..……..37
Figure III.8 Welding Torch Holder……..……..……..….38
Figure III.9 Proximity Switch Holders……..38
Figure III.10 Belt Pulley Holders……...……...39
Figure III.11 M2MD806 Bipolar Stepper Motor Driver……...40

Figure III.12 Screen-Shot Of The MarelCNC Software……. …….**41**
Figure III.13 DeskCNC 2nd Generation Controller Board…….……...**43**
Figure III.14 Proximity Switches……..…….……...**43**
Figure IV.1 Picture Of The Z axis, Including Step Motor, Bearing Shafts, Ballscrews, Belt And Pulley System…….……....**45**
Figure IV.2 Picture Of The Y axis, Including Step Motor, Shaft, Linear Guideway, Belt and Pulley System,…….…….…..….**45**
Figure IV.3 Picture Of The Electronic Parts On A Clipboard Including Stepper Motor Drivers, Controller Board, Power Supply Units, Connections...**45**
Figure IV.4 Picture Of The Welding Torch And Designed Holder For That……**46**
Figure IV.5 Picture Of The Welding Arc That Is Done By The Welding Robot…..**46**
Figure IV.6 Picture Of The Welding Arc That Is Done By The Welding Robot…..**46**

LIST OF TABLES

PAGE NUMBER

Table II.1 Stepper Motor Drive Sequences……...**27**

Table III.1 Standard Parts Used In the Design of X-Y Axes……....…**32**

Table III.2 Standard Parts Used In the Design of Z Axis……..……**33**

Table III.3 Stepper Motor Parameters…….……..**39**

CHAPTER I

INTRODUCTION AND AIM

As a result of rapid rise in population today, there has been an increasing demand on different types of products, therefore in manufacturing systems there have been extraordinary developments. As a consequence of expanding the automation-based manufacturing system that was suggested in the middle of last century, optimization age was passed through; and the 'robot' era that allows to increase productivity by decreasing investment costs, increase quality level with production rate, and provide more humanitarian working conditions has begun. [1]

Robot arc welding has begun growing quickly just recently, and already it commands about 20% of industrial robot applications. The major components of arc welding robots are the manipulator or the mechanical unit and the controller, which acts as the robot's "brain". The manipulator is what makes the robot move, and the design of these systems can be categorized into several common types, such as the scara robot and cartesian coordinate robot, which use different coordinate systems to direct the arms of the machine. [2]

This study aims to serve a different application about a welding automation which can be easy controlled, economical to produce and suitable for linear and repetitive small tasks. For this purpose a computer numerical controlled cartesian coordinate welding robot will be designed and produced.

CHAPTER II.

GENERAL BACKGROUND

II.1 LITERATURE SUMMARIES

There are many studies on designing a robot or a part of robot. Hereby not all of them will be talked about here; only some of them will be summarized. However, there are not so many studies about welding robots. Commercially, it is so easy to find so many types of welding robots designed and manufactured by famous companies about this subject like Fanuc, Mitsubishi, Motoman and etc. Despite this truth, only three studies about welding robot can be found at the available thesis library of The council of Higher Education of The Republic of Turkey. That thesis about welding and some others about cartesian robots will be summarized here.

Eğilmez and Zeylan worked on the same cartesian coordinate welding robot. Zeylan who is an Electric and Electronic Engineer designed the electronic parts to control the motion of stepper motors and Eğilmez, designed the mechanical parts of the robot as a mechanical engineer. 2 axis cartesian robot designed and produced. After producing the robot, some welding operations were carried out and radiographic tests were applied on that welding and better results were obtained compared to the manual weldings. [3,5].

Büyükşahin, designed and constructed a three axis CNC milling machine. Every calculations of the design were made by him. The ballscrews, guideways, stepper motors are all selected according to the calculations made by him. After all design and production, cost analysis was made by him. [4]

Özyalçın worked on designing and producing of an open structure cartesian coordinate robot. Stepper motors were used for this purpose. The electronic parts and interface programs were supplied from different places and an open structure cartesian robot was produced. Open structure cartesian robot means that many kinds of head can be used on this robot. According to the head used on this robot, the usage purpose of the robot can change. The main objective of that study was to get a precise 3 axis motion and it was accomplished. [5]

Aydoğdu worked on an existing arc robot with changing the some mechanical design and applying servo motor control. The most important advantage of the servo motors is feedback feature however they are really expensive. Aydoğdu made this job also for his company and had some good results. Because of constant and faster speed of servo motor controlled welding machines, the efficiency of the company was increased nearly 30 percent. [6].

Keskin's study is about robotic welding applications in automotive industry. In this study Keskin described some technical information about the welding methods, and welding parameters. Especially he worked on spot welding because of the much usage at automotive industry. After giving these information, he explained the basics of robot selection and the elements of the robot. Finally he designed the components and layout of the robotic cell and made simulation of optimum conditions working on an automobile door. This simulation was made with the help of ROBCAD software. [7]

II.2 WELDING

Welding is a fabrication process that joins materials, usually metals or thermoplastics, by causing coalescence. This is often done by melting the work pieces and adding a filler material to form a pool of molten material (the weld puddle) that cools to become a strong joint, with pressure sometimes used in conjunction with heat, or by itself, to produce the weld. This is in contrast with soldering and brazing, which involve melting a lower-melting-point material between the work pieces to form a bond between them, without melting the work pieces.

Figure II.1 Arc Welding

Many different energy sources can be used for welding, including a gas flame, an electric arc, a laser, an electron beam, friction, and ultrasound. While often an industrial process, welding can be done in many different environments, including open air, underwater and in space. Regardless of location, however, welding remains dangerous, and precautions must be taken to avoid burns, electric shock, eye damage, poisonous fumes, and overexposure to ultraviolet light.

Until the end of the 19th century, the only welding process was forge welding, which blacksmiths had used for centuries to join metals by heating and pounding them. Arc welding and oxyfuel welding were among the first processes to develop late in the century, and resistance welding followed soon after. Welding technology advanced quickly during the early 20th century as World War I and World War II drove the demand for reliable and inexpensive joining methods. Following the wars, several modern welding techniques were developed, including manual methods like shielded metal arc welding, now one of the most popular welding methods, as well as semi-automatic and automatic processes such as gas metal arc welding, submerged arc welding, flux-cored arc welding and electroslag welding. Developments continued with the invention of laser beam welding and electron beam welding in the latter half of the century. Today, the science continues to advance. Robot welding is becoming more commonplace in industrial settings, and researchers continue to develop new welding methods and gain greater understanding of weld quality and properties.

II.2.1 History of Welding

Figure II. 2, Iron Pillar Of Delhi.

The history of joining metals goes back several millennia, with the earliest examples of welding from the Bronze Age and the Iron Age in Europe and the

Middle East. Welding was used in the construction of the Iron pillar in Delhi, India, erected about 310 and weighing 5.4 tons. [2] The Middle Ages brought advances in forge welding, in which blacksmiths pounded heated metal repeatedly until bonding occurred. In 1540, Vannoccio Biringuccio published De la pirotechnia, which includes descriptions of the forging operation. Renaissance craftsmen were skilled in the process, and the industry continued to grow during the following centuries. [9] Welding, however, was transformed during the 19th century in 1800, Sir Humphry Davy discovered the electric arc, and advances in arc welding continued with the inventions of metal electrodes by a Russian, Nikolai Slavyanov, and an American, C. L.Coffin in the late 1800s, even as carbon arc welding, which used a carbon electrode, gained popularity. Around 1900, A.P. Strohmenger released a coated metal electrode in Britain, which gave a more stable arc, and in 1919, alternating current welding was invented by C.J. Holslag, but did not become popular for another decade. [8]

Resistance welding was also developed during the final decades of the 19th century, with the first patents going to Elihu Thomson in 1885, who produced further advances over the next 15 years. Thermite welding was invented in 1893, and around that time, another process, oxyfuel welding, became well established. Acetylene was discovered in 1836 by Edmund Davy, but its use was not practical in welding until about 1900, when a suitable blowtorch was developed. [2] At first, oxyfuel welding was one of the more popular welding methods due to its portability and relatively low cost. As the 20th century progressed, however, it fell out of favor for industrial applications. It was largely replaced with arc welding, as metal coverings (known as flux) for the electrode that stabilize the arc and shield the base material from impurities continued to be developed. [10]

World War I caused a major surge in the use of welding processes, with the various military powers attempting to determine which of the several new welding processes would be best. The British primarily used arc welding, even constructing a ship, the Fulagar, with an entirely welded hull. The Americans were more hesitant, but began to recognize the benefits of arc welding when the process allowed them to repair their ships quickly after German attacks in the New York Harbor at the beginning of the war. Arc welding was first applied to aircraft during the war as well, as some German airplane fuselages were constructed using the process. [9] Also noteworthy is the first welded road bridge in the world built across the river

Słudwia Maurzyce (near Łowicz, Poland) in 1929, but designed by Stefan Bryła of the Warsaw University of Technology in 1927. [14]

During the 1920s, major advances were made in welding technology, including the introduction of automatic welding in 1920, in which electrode wire was fed continuously. Shielding gas became a subject receiving much attention, as scientists attempted to protect welds from the effects of oxygen and nitrogen in the atmosphere. Porosity and brittleness were the primary problems, and the solutions that developed included the use of hydrogen, argon, and helium as welding atmospheres. [2] During the following decade, further advances allowed for the welding of reactive metals like aluminum and magnesium. This, in conjunction with developments in automatic welding, alternating current, and fluxes fed a major expansion of arc welding during the 1930s and then during World War II. [9]

During the middle of the century, many new welding methods were invented. 1930 saw the release of stud welding, which soon became popular in shipbuilding and construction. Submerged arc welding was invented the same year, and continues to be popular today. Gas tungsten arc welding, after decades of development, was finally perfected in 1941, and gas metal arc welding followed in 1948, allowing for fast welding of non-ferrous materials but requiring expensive shielding gases. Shielded metal arc welding was developed during the 1950s, using a flux coated consumable electrode, and it quickly became the most popular metal arc welding process. In 1957, the flux-cored arc welding process debuted, in which the self-shielded wire electrode could be used with automatic equipment, resulting in greatly increased welding speeds, and that same year, plasma arc welding was invented. Electroslag welding was introduced in 1958, and it was followed by its cousin, electro gas welding, in 1961. [2]

Other recent developments in welding include the 1958 breakthrough of electron beam welding, making deep and narrow welding possible through the concentrated heat source. Following the invention of the laser in 1960, laser beam welding debuted several decades later, and has proved to be especially useful in high-speed, automated welding. Both of these processes, however, continue to be quite expensive due the high cost of the necessary equipment, and this has limited their applications. [9]

II.2.2 Welding processes

II.2.2.1 Arc welding

These processes use a welding power supply to create and maintain an electric arc between an electrode and the base material to melt metals at the welding point. They can use either direct (DC) or alternating (AC) current, and consumable or non-consumable electrodes. The welding region is sometimes protected by some type of inert or semi-inert gas, known as a shielding gas, and filler material is sometimes used as well.

To supply the electrical energy necessary for arc welding processes, a number of different power supplies can be used. The most common classification is constant current power supplies and constant voltage power supplies. In arc welding, the length of the arc is directly related to the voltage, and the amount of heat input is related to the current. Constant current power supplies are most often used for manual welding processes such as gas tungsten arc welding and shielded metal arc welding, because they maintain a relatively constant current even as the voltage varies. This is important because in manual welding, it can be difficult to hold the electrode perfectly steady, and as a result, the arc length and thus voltage tend to fluctuate. Constant voltage power supplies hold the voltage constant and vary the current, and as a result, are most often used for automated welding processes such as gas metal arc welding, flux cored arc welding, and submerged arc welding. In these processes, arc length is kept constant, since any fluctuation in the distance between the wire and the base material is quickly rectified by a large change in current. For example, if the wire and the base material get too close, the current will rapidly increase, which in turn causes the heat to increase and the tip of the wire to melt, returning it to its original separation distance. [2]

The type of current used in arc welding also plays an important role in welding. Consumable electrode processes such as shielded metal arc welding and gas metal arc welding generally use direct current, but the electrode can be charged either positively or negatively. In welding, the positively charged anode will have a greater heat concentration, and as a result, changing the polarity of the electrode has an impact on weld properties. If the electrode is positively charged, the base metal will be hotter, increasing weld penetration and welding speed. Alternatively, a negatively charged electrode results in more shallow welds. [11] Nonconsumable electrode processes, such as gas tungsten arc welding, can use either type of direct current, as

well as alternating current. However, with direct current, because the electrode only creates the arc and does not provide filler material, a positively charged electrode causes shallow welds, while a negatively charged electrode makes deeper welds. [9] Alternating current rapidly moves between these two, resulting in medium-penetration welds. One disadvantage of AC, the fact that the arc must be re-ignited after every zero crossing, has been addressed with the invention of special power units that produce a square wave pattern instead of the normal sine wave, making rapid zero crossings possible and minimizing the effects of the problem.

Figure II.3,Shielded Metal Arc Welding

One of the most common types of arc welding is shielded metal arc welding (SMAW), which is also known as manual metal arc welding (MMA) or stick welding. Electric current is used to strike an arc between the base material and consumable electrode rod, which is made of steel and is covered with a flux that protects the weld area from oxidation and contamination by producing CO2 gas during the welding process. The electrode core itself acts as filler material, making separate filler unnecessary.

The process is versatile and can be performed with relatively inexpensive equipment, making it well suited to shop jobs and field work. [2] An operator can become reasonably proficient with a modest amount of training and can achieve mastery with experience. Weld times are rather slow, since the consumable electrodes must be frequently replaced and because slag, the residue from the flux, must be chipped away after welding. [10] Furthermore, the process is generally limited to welding ferrous materials, though special electrodes have made possible the welding of cast iron, nickel, aluminum, copper, and other metals. Inexperienced operators may find it difficult to make good out-of-position welds with this process.

Gas metal arc welding (GMAW), also known as metal inert gas or MIG welding, is a semi-automatic or automatic process that uses a continuous wire feed as

an electrode and an inert or semi-inert gas mixture to protect the weld from contamination. As with SMAW, reasonable operator proficiency can be achieved with modest training. Since the electrode is continuous, welding speeds are greater for GMAW than for SMAW. Also, the smaller arc size compared to the shielded metal arc welding process makes it easier to make out-of-position welds (e.g., overhead joints, as would be welded underneath a structure).

The equipment required to perform the GMAW process is more complex and expensive than that required for SMAW, and requires a more complex setup procedure. Therefore, GMAW is less portable and versatile, and due to the use of a separate shielding gas, is not particularly suitable for outdoor work. However, owing to the higher average rate at which welds can be completed, GMAW is well suited to production welding. The process can be applied to a wide variety of metals, both ferrous and non-ferrous. [9]

A related process, flux-cored arc welding (FCAW), uses similar equipment but uses wire consisting of a steel electrode surrounding a powder fill material. This cored wire is more expensive than the standard solid wire and can generate fumes and/or slag, but it permits even higher welding speed and greater metal penetration. [10]

Gas tungsten arc welding (GTAW), or tungsten inert gas (TIG) welding (also sometimes erroneously referred to as heliarc welding), is a manual welding process that uses a nonconsumable tungsten electrode, an inert or semi-inert gas mixture, and a separate filler material. Especially useful for welding thin materials, this method is characterized by a stable arc and high quality welds, but it requires significant operator skill and can only be accomplished at relatively low speeds.

GTAW can be used on nearly all weldable metals, though it is most often applied to stainless steel and light metals. It is often used when quality welds are extremely important, such as in bicycle, aircraft and naval applications. [10] A related process, plasma arc welding, also uses a tungsten electrode but uses plasma gas to make the arc. The arc is more concentrated than the GTAW arc, making transverse control more critical and thus generally restricting the technique to a mechanized process. Because of its stable current, the method can be used on a wider range of material thicknesses than can the GTAW process, and furthermore, it is much faster. It can be applied to all of the same materials as GTAW except magnesium, and automated welding of stainless steel is one important application of

the process. A variation of the process is plasma cutting, an efficient steel cutting process. [10]

Submerged arc welding (SAW) is a high-productivity welding method in which the arc is struck beneath a covering layer of flux. This increases arc quality, since contaminants in the atmosphere are blocked by the flux. The slag that forms on the weld generally comes off by itself, and combined with the use of a continuous wire feed, the weld deposition rate is high. Working conditions are much improved over other arc welding processes, since the flux hides the arc and almost no smoke is produced. The process is commonly used in industry, especially for large products and in the manufacture of welded pressure vessels. [10] Other arc welding processes include atomic hydrogen welding, carbon arc welding, electroslag welding, electrogas welding, and stud arc welding.

II.2.2.2 Gas Welding

The most common gas welding process is oxyfuel welding, also known as oxyacetylene welding. It is one of the oldest and most versatile welding processes, but in recent years it has become less popular in industrial applications. It is still widely used for welding pipes and tubes, as well as repair work. It is also frequently well-suited, and favored, for fabricating some types of metal-based artwork. Oxyfuel equipment is versatile, lending itself not only to some sorts of iron or steel welding but also to brazing, braze-welding, metal heating (for bending and forming), and also oxyfuel cutting.

The equipment is relatively inexpensive and simple, generally employing the combustion of acetylene in oxygen to produce a welding flame temperature of about 3100 °C. The flame, since it is less concentrated than an electric arc, causes slower weld cooling, which can lead to greater residual stresses and weld distortion, though it eases the welding of high alloy steels. A similar process, generally called oxyfuel cutting, is used to cut metals. [10] Other gas welding methods, such as air acetylene welding, oxygen hydrogen welding, and pressure gas welding are quite similar, generally differing only in the type of gases used. A water torch is sometimes used for precision welding of small items such as jewelry. Gas welding is also used in plastic welding, though the heated substance is air, and the temperatures are much lower.

II.2.2.3 Resistance Welding

Resistance welding involves the generation of heat by passing current through the resistance caused by the contact between two or more metal surfaces. Small pools of molten metal are formed at the weld area as high current (1000–100,000 A) is passed through the metal. In general, resistance welding methods are efficient and cause little pollution, but their applications are somewhat limited and the equipment cost can be high.

Figure II.4 Spot Welder

Spot welding is a popular resistance welding method used to join overlapping metal sheets of up to 3 mm thick. Two electrodes are simultaneously used to clamp the metal sheets together and to pass current through the sheets. The advantages of the method include efficient energy use, limited work piece deformation, high production rates, easy automation, and no required filler materials. Weld strength is significantly lower than with other welding methods, making the process suitable for only certain applications. It is used extensively in the automotive industry—ordinary cars can have several thousand spot welds made by industrial robots. A specialized process, called shot welding, can be used to spot weld stainless steel.

Like spot welding, seam welding relies on two electrodes to apply pressure and current to join metal sheets. However, instead of pointed electrodes, wheel-shaped electrodes roll along and often feed the work piece, making it possible to make long continuous welds. In the past, this process was used in the manufacture of beverage cans, but now its uses are more limited. Other resistance welding methods include flash welding, projection welding, and upset welding. [10]

II.2.2.4 Energy Beam Welding

Energy beam welding methods, namely laser beam welding and electron beam welding, are relatively new processes that have become quite popular in high production applications. The two processes are quite similar, differing most notably

in their source of power. Laser beam welding employs a highly focused laser beam, while electron beam welding is done in a vacuum and uses an electron beam. Both have a very high energy density, making deep weld penetration possible and minimizing the size of the weld area. Both processes are extremely fast, and are easily automated, making them highly productive. The primary disadvantages are their very high equipment costs (though these are decreasing) and a susceptibility to thermal cracking. Developments in this area include laser-hybrid welding, which uses principles from both laser beam welding and arc welding for even better weld properties. [10]

II.2.2.5 Solid-State Welding

Like the first welding process, forge welding, some modern welding methods do not involve the melting of the materials being joined. One of the most popular, ultrasonic welding, is used to connect thin sheets or wires made of metal or thermoplastic by vibrating them at high frequency and under high pressure. The equipment and methods involved are similar to that of resistance welding, but instead of electric current, vibration provides energy input. Welding metals with this process does not involve melting the materials; instead, the weld is formed by introducing mechanical vibrations horizontally under pressure. When welding plastics, the materials should have similar melting temperatures, and the vibrations are introduced vertically. Ultrasonic welding is commonly used for making electrical connections out of aluminum or copper, and it is also a very common polymer welding process.
Another common process, explosion welding, involves the joining of materials by pushing them together under extremely high pressure. The energy from the impact plasticizes the materials, forming a weld, even though only a limited amount of heat is generated. The process is commonly used for welding dissimilar materials, such as the welding of aluminum with steel in ship hulls or compound plates. Other solid-state welding processes include co-extrusion welding, cold welding, diffusion welding, friction welding (including friction stir welding), high frequency welding, hot pressure welding, induction welding, and roll welding. [10]

II.2.3 Costs And Trends

As an industrial process, the cost of welding plays a crucial role in manufacturing decisions. Many different variables affect the total cost, including

equipment cost, labor cost, material cost, and energy cost. Depending on the process, equipment cost can vary, from inexpensive for methods like shielded metal arc welding and oxyfuel welding, to extremely expensive for methods like laser beam welding and electron beam welding. Because of their high cost, they are only used in high production operations. Similarly, because automation and robots increase equipment costs, they are only implemented when high production is necessary. Labor cost depends on the deposition rate (the rate of welding), the hourly wage, and the total operation time, including both time welding and handling the part. The cost of materials includes the cost of the base and filler material, and the cost of shielding gases. Finally, energy cost depends on arc time and welding power demand.

For manual welding methods, labor costs generally make up the vast majority of the total cost. As a result, many cost-savings measures are focused on minimizing the operation time. To do this, welding procedures with high deposition rates can be selected, and weld parameters can be fine-tuned to increase welding speed. Mechanization and automation are often implemented to reduce labor costs, but this frequently increases the cost of equipment and creates additional setup time. Material costs tend to increase when special properties are necessary, and energy costs normally do not amount to more than several percent of the total welding cost. [10]

In recent years, in order to minimize labor costs in high production manufacturing, industrial welding has become increasingly more automated, most notably with the use of robots in resistance spot welding (especially in the automotive industry) and in arc welding. In robot welding, mechanized devices both hold the material and perform the weld,[9] and at first, spot welding was its most common application. But robotic arc welding has been increasing in popularity as technology has advanced. Other key areas of research and development include the welding of dissimilar materials (such as steel and aluminum, for example) and new welding processes, such as friction stir, magnetic pulse, conductive heat seam, and laser-hybrid welding. Furthermore, progress is desired in making more specialized methods like laser beam welding practical for more applications, such as in the aerospace and automotive industries. Researchers also hope to better understand the often unpredictable properties of welds, especially microstructure, residual stresses, and a weld's tendency to crack or deform. [13]

II.3 ROBOT WELDING

Robot welding is the use of mechanized programmable tools (robots), which completely automate a welding process by both performing the weld and handling the part. Processes such as gas metal arc welding, while often automated, are not necessarily equivalent to robot welding, since a human operator sometimes prepares the materials to be welded. Robot welding is commonly used for resistance spot welding and arc welding in high production applications, such as the automotive industry.

Robot welding is a relatively new application of robotics, even though robots were first introduced into US industry during the 1960s. The use of robots in welding did not take off until the 1980s, when the automotive industry began using robots extensively for spot welding. Since then, both the number of robots used in industry and the number of their applications has grown greatly. As of 2005, more than 120,000 robots are used in North American industry, about half of them pertaining to welding. Growth is primarily limited by high equipment costs, and the resulting restriction to high-production applications.

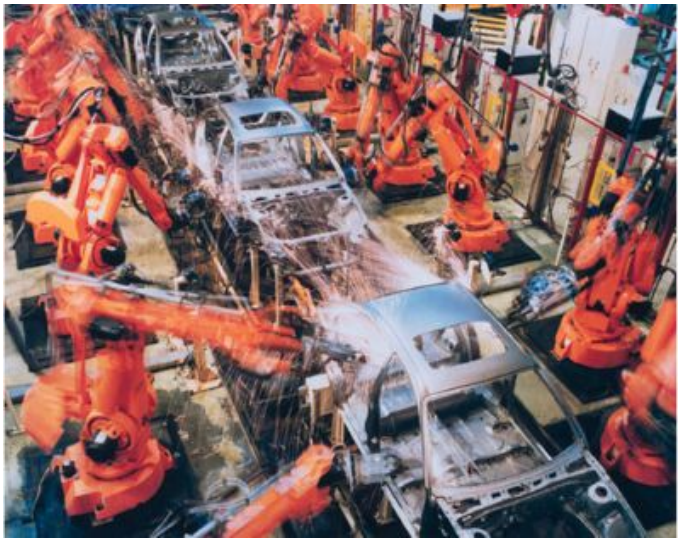

Figure II.5 Industrial Robots Welding A Car In A Production Line.

Robot arc welding has begun growing quickly just recently, and already it commands about 20% of industrial robot applications. The major components of arc welding robots are the manipulator or the mechanical unit and the controller, which acts as the robot's "brain". The manipulator is what makes the robot move, and the design of these systems can be categorized into several common types, such as the SCARA robot and cartesian coordinate robot, which use different coordinate systems to direct the arms of the machine.

The technology of signature image processing has been developed since the late 1990s for analyzing electrical data in real time collected from automated, robotic welding, thus enabling the optimization of welds. [2]

II.3.1 When Should Robots Be Used For Welding?

A welding process that contains repetitive tasks on similar pieces might be suitable for automation. The number of items of any type to be welded determines whether automating a process or not. If parts normally need adjustment to fit together correctly, or if joints to be welded are too wide or in different positions from piece to piece, automating the procedure will be difficult or impossible. Robots work well for repetitive tasks or similar pieces that involve welds in more than one axis or where access to the pieces is difficult. [16]

II.3.2 Why Robot Welding?

The most prominent advantages of automated welding are precision and productivity. Robot welding improves weld repeatability. Once programmed correctly, robots will give precisely the same welds every time on work pieces of the same dimensions and specifications. Automating the torch motions decreases the error potential which means decreased scrap and rework. With robot welding you can also get an increased output. Not only does a robot work faster, the fact that a fully equipped and optimized robot cell can run for 24 hours a day, 365 days a year without breaks makes it more efficient than a manual weld cell.

Another benefit of automated welding is the reduced labor costs. Robotic welding also reduces risk by moving the human welder/operator away from hazardous fumes and molten metal close to the welding arc. [16]

II.4 CONTROL SYSTEM [20]

II.4.1 Numerical Control

Numerical control or numerically controlled (NC) machine tools are machines that are automatically operated by commands that are received by their processing units. NC machines were first developed soon after World War II and made it possible for large quantities of the desired components to be very precisely and efficiently produced (machined) in a reliable repetitive manner. These early

machines were often fed instructions which were punched onto paper tape or punch cards. In the 1960s, NC machines largely gave way to CNC, or computer numerical control, machines.

Numerical Control (NC) was the precursor of today's Computer Numerical Control (CNC), which controls the automation of machine tools and the inherent tool processes for which they are designed. The CNC machine tool is the servo actuator of the CAD/CAM (Computer Assisted Design/Computer Assisted Manufacturing) technology both literally and figuratively. CNC inherits from NC the essential character of by-the-numbers interpolation of transition points in the work envelope of a multi-axis motion platform, based on the separation of programming from operations. The set of instructions, or "program" is prepared from a blueprint or CAD file and transferred to the memory of the CNC via floppy drive, serial data interface or a network connection. Once stored in the CNC memory and selected, the program is executed by pressing the appropriate key on the machine operator panel.

II.4.1.1 Historical Notes

The need of the U.S. Air Force for templates more precise than could be obtained by state-of-the-art methods of the late 1940s inspired John Parsons, President of the Parsons Works of Traverse City, Michigan, to propose that a by-the-numbers technique (commonly used by machinists of that era) be placed under servo control with positional data generated by a computer, thereby providing much more data than would be practical by means of hand calculations. His concept was to machine to set points as guides for subsequent manual finishing, that is, to speed up a manual process so more points could be included.

Mr. Parsons' project was enjoined by the Servo Mechanisms Laboratory of the Massachusetts Institute of Technology and redefined as interpolative positional control that caused the cutting tool to traverse a series of straight lines between defined points at a prescribed rate of travel. Thus, the cutting tool would be almost constantly on the programmed contour and would spend very little of its time making non-cutting moves.

In the M.I.T. scheme, a contour of constantly changing curvature was represented as a poly-line with the intersections between line segments being points on the curve, and the axial coordinates of these points were listed for execution in

sequential order in the part program (much like the figure which results from connecting-the-dots in an activity book). The shorter the line segments the more accurately the poly-line would approximate the actual curve. Thus, M.I.T. retained separation of programming from operations while redefining the servo control as interpolative, rather than discretionary, positioning. M.I.T. demonstrated the first ever NC machine tool to a select group from the military, the aerospace industry, the machine tool industry and the technical media in September, 1952.

At the time when M.I.T. was developing numerical control, engineers at General Motors were putting position transducers on the lead screws of a conventional engine lathe and recording the motion of the axes as the machinist put the machine through its paces to make a work piece. The machine was also fitted with a servo system that took data from the recording to reproduce the same sequence of motion to produce a second, third and more parts. This technique is called record/playback. Record/playback is different from numerical control in that the program is produced by the machinist in the process of making the first part. The Air Force wanted numerical control and not record/playback because 1) the latter put the machinists who were union members in charge of program production, thus union strikes could result in unacceptable delays in military production, and 2) numerical control demonstrated the capability of producing complex parts that were not possible by the conventional manual methods used in the record/playback technique. The Air Force used its deep pockets to get its way and while American manufacturing may have been better served by the simpler Parsons concept or by record/playback, today this is a moot issue.

The electronic files used to control NC and CNC machines are often in a format called G-Code, after Gerber Scientific Instruments, a manufacturer of photo plotters and developer of the file format. The X-Y two-dimensional motion of photo plotters was extended to include the third Z axis, and along with special codes, allows milling machines to be steered in more than three axes. Many of the lines of text in the control files start with the ASCII letter G, thus the name; however, there are other commands that start with the letter D and M, as well as X and Y for coordinates. The file format became so widely used that it has been embodied in an EIA standard.

II.4.1.2 Today

An entire manufacturing technology known as CAD/CAM has developed around the NC concept and, in addition, CNC with its powerful microprocessors and other enabling technologies proffered from the personal computing phenomenon has enabled the NC concept to branch into many variants, even a variant that is essentially record/playback. The latter of which are known in the industry as "teach lathes".

In addition, powerful and well-crafted human/machine interfaces allow the machine operator to prepare programs by means of interactive displays which request only the definition of the machining operation and its required parameters (such as a "pocket" and its dimensions) and not the actual tool paths with all the calculations that are there required. Anyone who knows machining concepts and blueprint interpretation can produce programs at the machine without the need for CAD/CAM. Nonetheless, the vast majority of programs are now produced with the aid of CAD/CAM and, for most users, CNC today (for all its gigahertz microprocessors and megabytes of real time kernel software) is conceptually little different from the first NC demonstrated by the M.I.T. in 1952.

If there is a notable difference in concept, it is that CNC is no longer just for the spindle/cutting tool process of stock removal. It is for any processes that can be carried on machine tool motion platforms and that benefit from the separation of programming from operations, that is, from the CAD/CAM technology. These include lasing, welding, Rapid prototyping, friction stir welding, ultrasonic welding, flame cutting, bending, spinning, pinning, gluing, fabric cutting, sewing, tape and fiber placement, routing, picking and placing , sawing and undoubtedly, the industrial processes of tomorrow.

II.4.1.3 Motion Control

The most basic function of any CNC machine is automatic, precise, and consistent motion control. All forms of CNC equipment have two or more directions of motion, called axes. These axes can be precisely and automatically positioned along their lengths of travel. The two most common axis types are linear (driven along a straight path) and rotary (driven along a circular path).

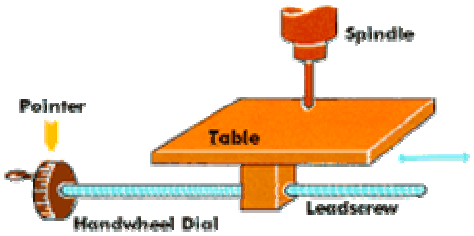

Figure II.6 A Conventional Machine's Slide Is Moved By Turning The Hand Wheel.

Instead of causing motion by manually turning cranks and hand wheels as is required on conventional machine tools, CNC machines allow motions to be actuated by servomotors under control of the CNC, and guided by the part program. Generally speaking, the motion type (rapid, linear, and circular), the axes to move, the amount of motion and the motion rate (feed rate) are programmable with almost all CNC machine tools. Figure II.6 (above) shows the motion control of a conventional machine tool. Figure II.7 (below) shows the makeup of a linear axis of a CNC machine.

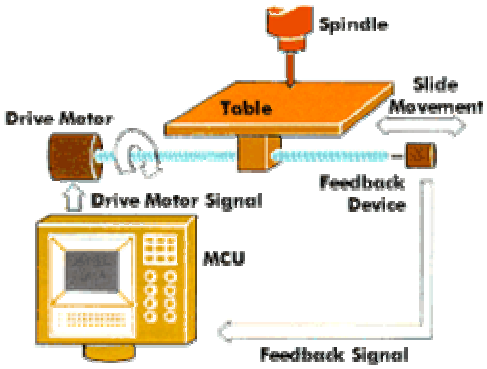

Figure II.7 A CNC Machine Takes The Commands From The CNC Program. *

*The drive motor is rotated a corresponding amount, which in turn drives the ballscrew, causing linear motion of the axis. A feedback device confirms that the proper amount of ballscrew revolutions have occurred.

A CNC command executed within the control (commonly through a program) tells the drive motor to rotate a precise number of times. The rotation of the drive motor in turn rotates the ballscrew. And the ballscrew drives the linear axis. A feedback device at the opposite end of the ballscrew allows the control to confirm that the commanded number of rotations has taken place.

Though a rather crude analogy, the same basic linear motion can be found on a common table vise. As you rotate the vise crank, you rotate a lead screw that, in turn, drives the movable jaw on the vise. By comparison, a linear axis on a CNC

machine tool is extremely precise. The number of revolutions of the axis drive motor precisely controls the amount of linear motion along the axis.

II.4.2 Stepper Motor Basics

II.4.2.1 Technical Description

Stepper motors are electromechanical equipments converting electrical energy into rotation movement. Pulses of electricity drive rotor and connected shaft. They are connected to stepper motor drivers which have high switching capability. This driver gets pulses from a digital controller and each pulse drives the shaft of the motor for a determined angle. This little angle is called step angle and fixed for each motor. The speed and direction of the movement depends on pulse sequence and pulse frequency. A basic shape of a stepper motor is shown in Figure II.8.

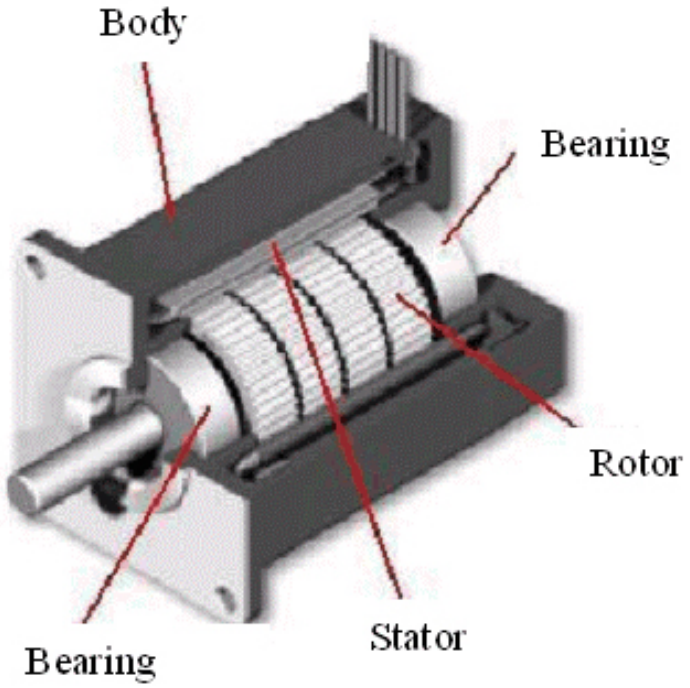

Figure II.8 Construction Of A Stepper Motor

The rotation has not only a direct relation to the number of input pulses, but its speed is also related to the frequency of the pulses. Stepper motors vary in the amount of rotation that the shaft turns each time when a winding is energized. The amount of rotation is called step angle as mentioned before and vary from 0.9° degrees (1.8° degrees is more common) to 90° degrees. Step angle determines the number of steps per revolution. A stepper with a 1.8° degrees step angle must be pulsed 200 times (1.8° x 200 = 360°) for the shaft to turn one complete revolution.

Sensitivity of a stepper motor increase with the number of steps in one revolution like its cost.

Obviously, a smaller step angle increase the accuracy of a motor. But stepper motors have an upper limit to the number of pulses they can accept per second. Heavy-duty steppers usually have a maximum pulse rate (or step rate) of 200 or 300 steps per second, so they have an effective high speed of one to three revolution per second (60 to 180 rpm). Some smaller steppers can accept a thousand or more pulses per second, but they don't provide very torque and are not suitable as driving or steering motors.

The stepper motor coils are typically rated for a particular voltage. The coils act as inductors when voltage is supplied to them. As such they don't instantly draw their full current and in fact may never reach full current at high stepping frequencies. The electromagnetic field produced by the coils is directly related to the amount of current they draw. The larger the electromagnetic field the more torque the motors have the potential of producing. The solution to increasing the torque is to ensure that the coils reach full current draw during each step.

Stepper motors can be viewed as electric motors without commutators. Typically, all windings in the motor are part of the stator, and the rotor is either a permanent magnet or, in the case of variable reluctance motors, a toothed block of some magnetically soft material. All of the commutation must be handled externally by the motor controller, and typically, the motors and controllers are designed so that the motor may be held in any fixed position as well as being rotated one way or the other.

It should be noted that stepper motors couldn't be motivated to run at their top speeds immediately from a dead stop. Applying too many pulses right off the bat simply causes the motor to freeze up. To achieve top speeds, the motor must be gradually accelerated.

The acceleration can be quite swift in human terms. The speed can be 1/3 for the first few milliseconds, 2/3 for the next 50 or 75 milliseconds, then full blast after that.

Actuation of one of the windings in a stepper motor advances the shaft. Continue to apply the current to the winding and the motor won't turn any more. In fact, the shaft will be locked, as if brakes are applied. As a result of this interesting locking effect, you never need to add a braking circuit to a stepper motor, because it

has its own brakes built in. The amount of breaking power of a stepper motor is expressed as holding torque.

II.4.2.2 Stepper Motor Types

Variable Reluctance (VR)

VR motors are characterized as having a soft iron multiple rotor and a wound stator. They generally operate with step angles from 5 degrees to 15 degrees at relatively high step rates, and have no detent torque (detent torque is the holding torque when no current is flowing in the motor).

In Figure II.9 when phase A is energized, four rotor teeth line up with the four stator teeth of phase A by magnetic attraction. The next step is taken when A is turned off and phase B is energized, rotating the rotor clockwise 15 degrees; Continuing the sequence, C is turned on next and then A again. Counter clockwise rotation is achieved when the phase order is reversed.

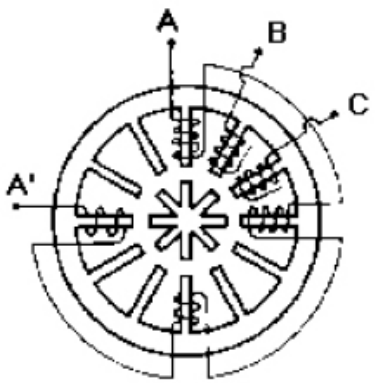

Figure II.9, Variable Reluctance Motor

Permanent Magnet (PM)

PM motors differ from VR's by having permanent magnet rotors with no teeth, and are magnetized perpendicular to the axis. In energizing the four phases in sequence, the rotor rotates as it is attracted to the magnetic poles. The motor shown in Figure II.10 will take 90 degree steps as the windings are energized in sequence ABCD. PM's generally have step angles of 45 or 90 degrees and step at relatively low rates, but they exhibit high torque and good damping characteristics.

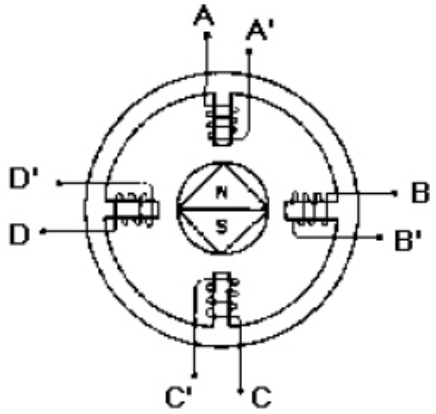

Figure II. 10, Permanent Magnet Motor

Hybrid (HB)

Combining the qualities of the VR and the PM, the hybrid motor has some of the desirable features of each. They have high detent torque and excellent holding and dynamic torque, and they can operate at high stepping speeds. Normally, they exhibit step angles of 0.9 to 5 degrees. Bi-polar windings are generally supplied (as depicted in Figure II.11), so that a single-source power supply can be used . If the phases are energized one at a time, in the order indicated, the rotor would rotate in increments of 1.8 degrees. This motor can also be driven two phases at a time to yield more torque, or alternately one then two then one phase, to produce half steps or 0.9 degree increments.

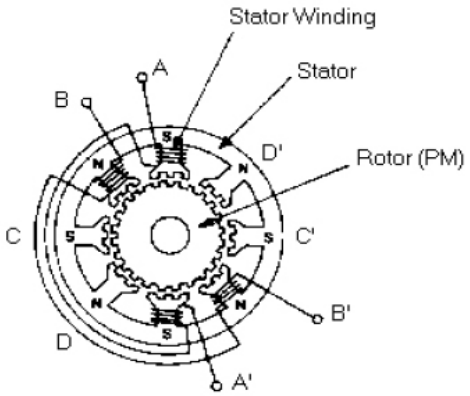

Figure II.11 Hybrid Motor

II.4.3 Coil Excitation Types

II.4.3.1 Unipolar Stepper Motors

Unipolar motors are relatively easy to control. A simple 1-of-'n' counter circuit can generate the proper stepper sequence, and drivers as simple as 1 transistor per

winding are possible with unipolar motors. Unipolar stepper motors are characterized by their center tapped windings. A common wiring scheme is to take all the taps of the center-tapped windings and feed them +Vm (Motor voltage). The driver circuit would then ground each winding to energize it.

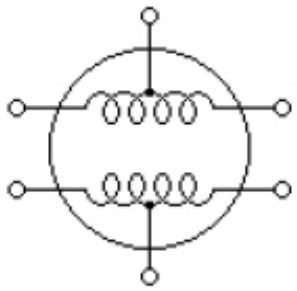

Figure II.12 6-Wire Unipolar Stepper Motor

Unipolar stepper motors, both Permanent magnet and hybrid stepper motors with 5 or 6 wires are usually wired as shown in the schematic in Figure II.12, with a center tap on each of two windings. In use, the center taps of the windings are typically wired to the positive supply, and the two ends of each winding are alternately grounded to reverse the direction of the field provided by that winding. (Figure II.13)

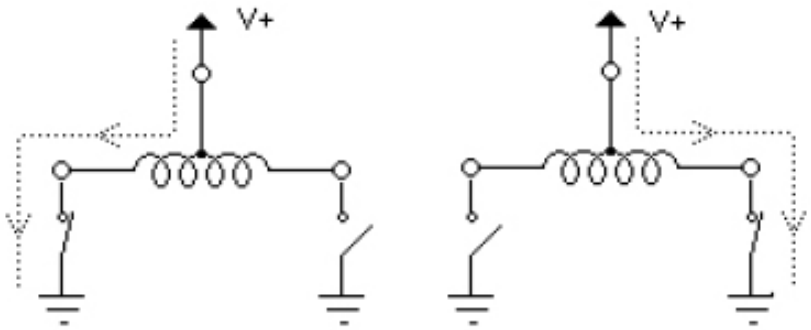

Figure II.13 Reversal Of Current In One Coil Of A Unipolar Stepper Motor

In unipolar stepper motors the number of phases is twice the number of coils, since each coil is divided in two. The diagram below which has two center-tapped coils represents the connection of a 4-phase unipolar stepper motor.

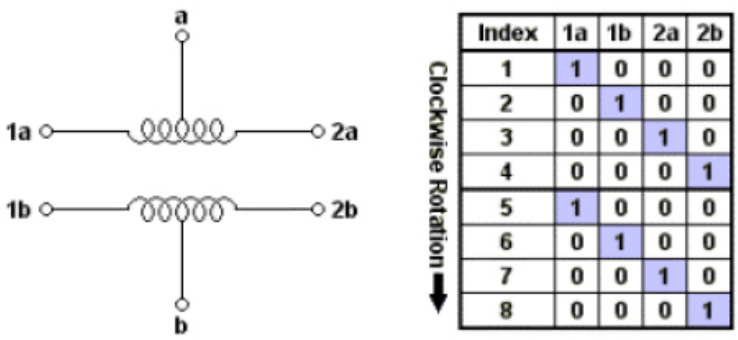

Index	1a	1b	2a	2b
1	1	0	0	0
2	0	1	0	0
3	0	0	1	0
4	0	0	0	1
5	1	0	0	0
6	0	1	0	0
7	0	0	1	0
8	0	0	0	1

Figure II.14 Unipolar Drive Sequence

In addition to the standard drive sequence, high-torque and half-step drive sequences are also possible. In the high-torque sequence, two windings are active at a time for each motor step. This two-winding combination yields around 1.4 times more torque than the standard sequence, but it draws twice the current. Half-stepping is achieved by combining the two sequences. First, one of the windings is activated, then two, then one, etc. This effectively doubles the number of steps the motor will advance for each revolution of the shaft, and it cuts the number of degrees per step in half.

II.4.3.2 Bipolar Stepper Motors

Bipolar permanent magnet and hybrid motors are constructed with exactly the same mechanism as is used on unipolar motors, but the two windings are wired more simply, with no center taps. Thus, the motor itself is simpler but the drive circuitry needed to reverse the polarity of each pair of motor poles is more complex. The schematic in Figure II.15 shows how such a motor is wired.

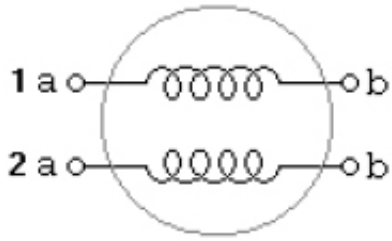

Figure II.15 4-Wire Bipolar Stepper

Unlike unipolar stepper motors, bipolar units require more complex driver circuitry. Bipolar motors are known for their excellent size/torque ratio, and provide more torque for their size than unipolar motors. Bipolar motors are designed with

separate coils that need to be driven in either direction (the polarity needs to be reversed during operation) for proper stepping to occur. This presents a driver challenge. Bipolar stepper motors use the same binary drive pattern as a unipolar motor, only the '0' and '1' signals correspond to the polarity of the voltage applied to the coils, not simply 'on-off' signals. Figure II.16 shows a basic 4-phase bipolar motor's coil setup and drive sequence.

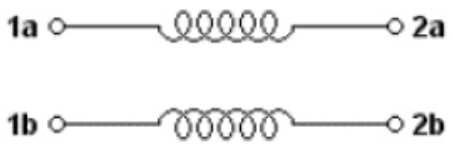

Clockwise Rotation

Index	1a	1b	2a	2b
1	+	–	–	–
2	–	+	–	–
3	–	–	+	–
4	–	–	–	+
5	+	–	–	–
6	–	+	–	–
7	–	–	+	–
8	–	–	–	+

Figure II.16 Bipolar Drive Sequence

The Bipolar Controller must be able to reverse the polarity of the voltage across either coil, so current can flow in both directions. And, it must be able to energize these coils in sequence. The mechanism for reversing the voltage across one of the coils is called an H. Bridge, because it resembles a letter "H" (Figure II.17).

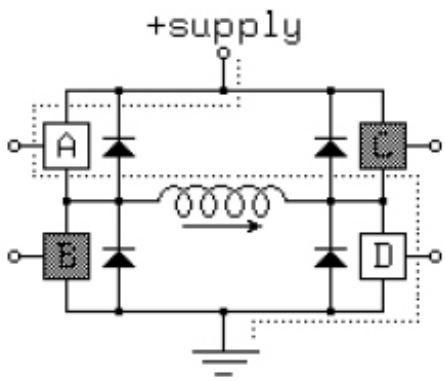

Figure II.17 Conception Of H-Bridge Circuit

II.4.4 Stepper Motor Drive Sequences

The following table describes 3 useful stepping sequences and their relative merits. The polarity of terminals is indicated with +/-. After the last step in each sequence the sequence repeats. Stepping backwards through the sequence reverses

the direction of the motor. Note that these sequences are identical for unipolar and bipolar stepper motors.

Table II.1 Stepper Motor Drive Sequences

Name	Sequence	Polarity	Description
Wave Drive, One-Phase	0001 0010 0100 1000	---+ --+- -+-- +---	Consumes the least power. Only one phase is energized at a time. Assures positional accuracy regardless of any winding imbalance in the motor.
Hi-Torque, Two-Phase	0011 0110 1100 1001	--++ -++- ++-- +--+	This sequence energizes two adjacent phases, which offers an improved torque-speed product and greater holding torque.
Half-Step	0001 0011 0010 0110 0100 1100 1000 1001	---+ --++ --+- -++- -+-- ++-- +--- +--+	Effectively doubles the stepping resolution of the motor, but the torque is not uniform for each step. (Since switching occurs between Wave Drive and Hi-Torque with each step, torque alternates each step.) This sequence reduces motor resonance which can sometimes cause a motor to stall at a particular resonant frequency. Note that this sequence is 8 steps.

II.4.5 Stepper Motor Control

Amount, speed, and direction of rotation of a step motor are determined by appropriate configurations of digital control devices. Major types of digital control devices are: Motor Drivers. Control Links, and Controllers. These devices are employed as shown in Figure II.18. The Driver accepts clock pulses and direction signals and translates these signals into appropriate phase currents in the motor. The indexer creates the clock pulses and direction signals. The computer or PLC (programmable logic controller) sends commands to the indexer.

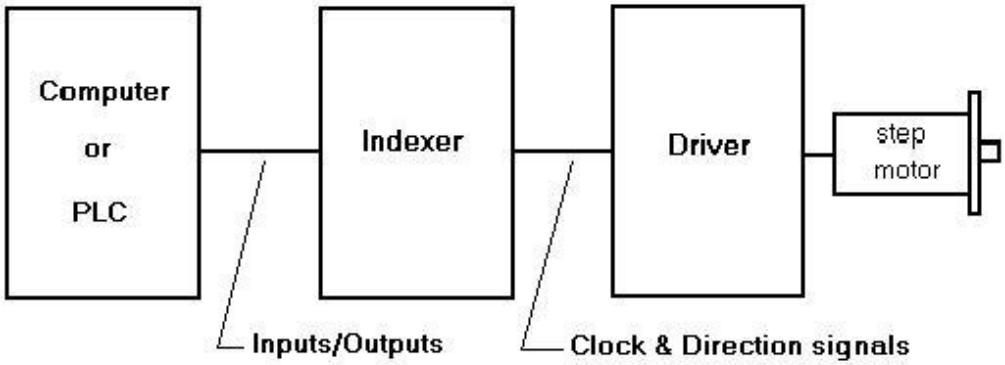

Figure II.18 Typical Step Motor System

II.4.5.1 Modes

There are three commonly used excitation modes: full-step, half-step, and micro-step.

Full-Step

In full step operation, the motor steps through the normal step angle e.g. 200 step revolution motors take 1.8 steps while in half step operation, 0.9 steps are taken. There are two kinds of full-step modes. Single phase full-step excitation is where the motor is operated with only one phase energized at-a-time. This mode should only be used where torque and speed performance are not important, e.g. where the motor is operated at a fixed speed and load conditions are well defined. Problems with resonance operated at fixed speed and load conditions are well defined. Problems with resonance can preclude operation at some speeds. This mode requires the least amount of power from the drive power supply of any of the excitation modes. Dual phase full-step excitation is where the motor is operated with two phases energized at-a-time. This mode provides good torque and speed performance with a minimum of resonance problems. Dual excitation, provides about 30 to 40 percent more torque than single excitation, but does require twice the power from the drive power supply.

Half-Step

Half-step excitation is alternate single and dual phase operation resulting in steps one half the normal step sizes. This mode provides twice the resolution. While the motor torque output varies on alternate steps, this is more than offset by the need to step through only half the angle. This mode has become the predominately used mode by Anaheim Automation because it offers almost complete freedom from resonance problems. Motors can be operated over a wide range of speeds and used to drive almost any load commonly encountered.

Micro-Step

In the micro-step mode, a motor's natural step angle can be divided into much smaller angles. For example, a standard 1.8 degree motor has 200 steps/revolution. If the motor is micro-stepped with a 'divide-by-10'. Then each micro-step would move the motor 0.18 degrees and there would be 2,000 steps/revolution. Typically, micro-step modes range from divide-by-10 to divide-by-256 (51.200 steps/rev for a

1.8 degree motor). The micro-steps are produced by proportioning the current in the two windings according to sine and cosine functions. This mode is only used where smoother motion or more resolution is required.

CHAPTER III.

THE STUDY FOR DESIGN AND PRODUCTION OF THE WELDING ROBOT

The first step in the design procedure of the welding robot is the determination of the robot type. Cartesian coordinate system is selected as robot type in this study. 3 axes coordinate welding robot will be designed and produced, because of easy control and economical production of that type.

There are certain features that have to be implemented, in order to design a Cartesian coordinate welding robot. The motion of the cartesian coordinate robot will be in 3 axes (X, Y, Z). The mechanical movements have to be precise, and the human intervention has to be minimal. In order to satisfy this feature computer numerical control will be implemented as mentioned before. A PC is used as the controller and signal generator. The generated signals are transferred to the drivers through the serial port of the computer to the interface. After that motor drivers have to be implemented to the system. And with these drivers the motors will be driven. For the movement of head at X and Y direction and movement of the weldment at Z direction three motion sources are needed. This motion sources can be DC motors, stepper motors, servo motors or linear motors. Stepper motors are chosen because of their agreeable cost and accuracy range. Servo motors are faster and since they have feedback circuits the position accuracy is certain but they are much more expensive than stepper motors so their driver units. For this application since there is not much load, an open loop system with a stepper motor will satisfy the accuracy.

The first step of designing a welding robot is to design a carrying unit for the axes and control units. A chassis is designed for carrying and assembling the system. 40x40 mm with 3 mm thickness steel profiles are used for the chassis. There are also some assembling parts on the chassis for providing easy installation.

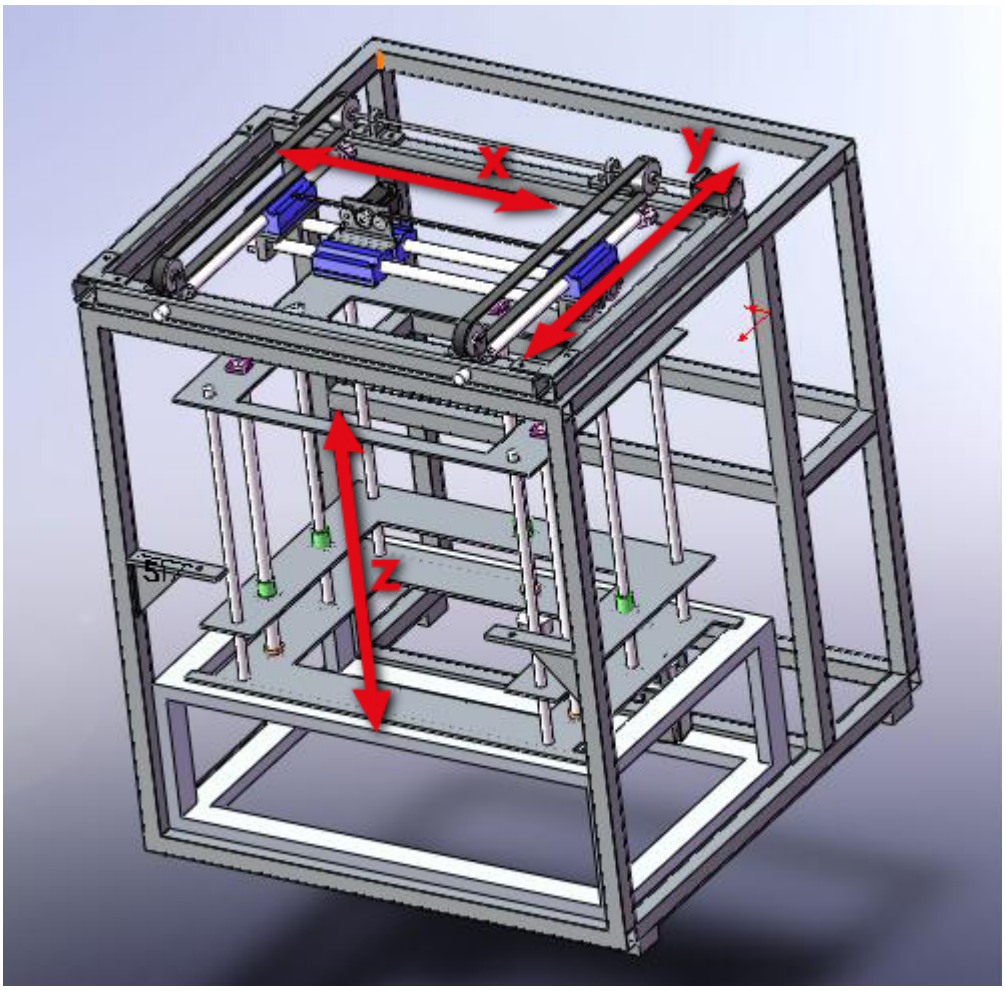

Figure III.1 General View Of The Preliminary Design Made By CAD Techniques.

III.1 X AND Y AXIS OF THE ROBOT

As mentioned above there are three motion axes of the welding robot. The main axes are X and Y axes because the head unit which includes welding torch is moves along these axes. However the Z axis is for the material that will be welded. With the X and Y axes the major key of the study is the precise control of the motion along the axes since there is not an excessive load exerted. For the precise motion control, belt and belt pulleys are used and assembled to the system.

X and Y axes are mounted on a 1080x700 mm rectangular frame which is combined of 40x40 aluminum profiles that have 3 mm thickness. All the fixing and mounting materials are also aluminum. Belt and pulley system is selected for power transmission. There are two step motors in X and Y axes, one is for X axis and the other one is for Y axis motion. The head unit is attached to the X axis which means head unit directly depends on X axis motion but relatively depend on to the motion

of Y axis. The welding torch will be mounted on the head unit and will be bolted to the linear guideways.

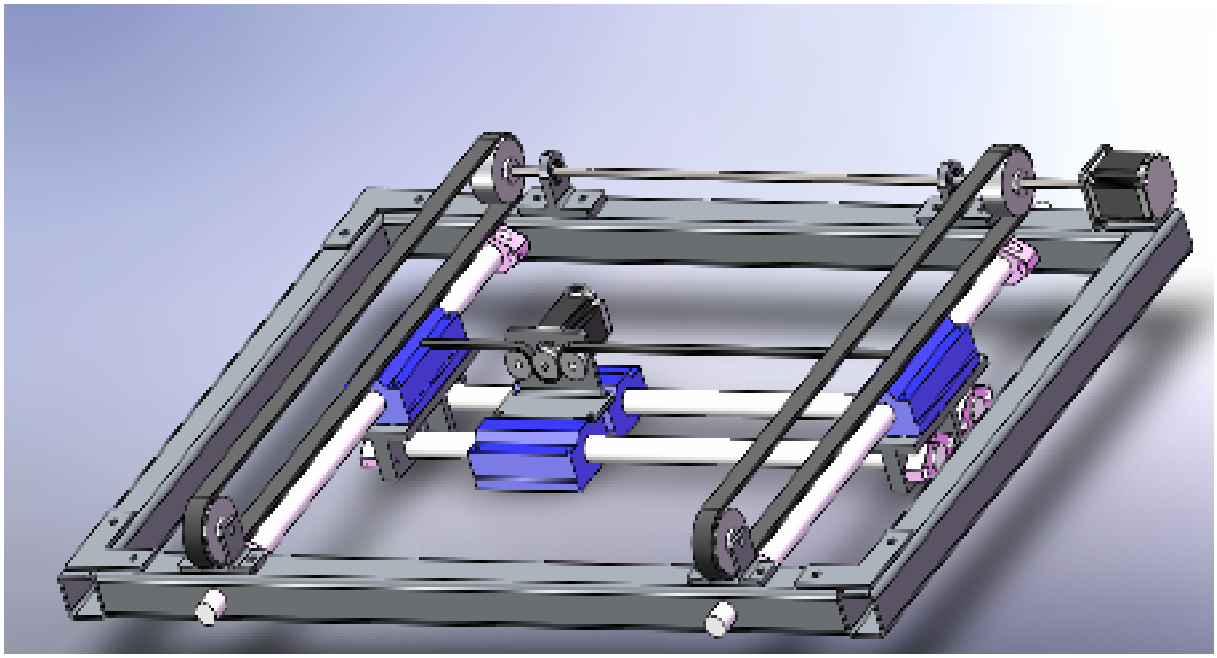

Figure III.2 X and Y axis of the design including the components used on

Table III.1,Standard Parts Used In the Design of X-Y Axes

No	Part Name	Quantity	For which Axe
1	Shafts for guideways	4	2 X, 2 Y
2	Linear Guideways	4	2 X, 2 Y
3	Belt pulley	5	1 X, 4 Y
4	Bearing	2	2 X, 2 Y
5	Bearing Bushing	2	2 X
6	Shaft end flange	8	4 X, 4 Y

III.2 Z AXIS OF THE ROBOT

The third axis of the robot is the Z axis. The structural frame of this axis is designed of aluminum. The structural frame is composed of three trays. The bottom and top ones are constant and the middle one is movable for the welded material. The motion of the middle tray is gained by a step motor, 3 ballscrew, belt and belt pulley combination. The power of the step motor is transmitted to the ballscrew by the belt and pulleys. The rotating power on the ballscrews turns into linear motion by the help of linear bushings and the middle tray moves along Z axis. Selection of the step motor for this axis is so important because load is exerted through this axis. The step motor must be more powerful than the other step motors on the other axes.

For this purpose some calculations are made and a step motor with a 8.4 Nm holding torque and 2.4 N.m detent torque is selected.

The parallelism of the power screws is the most important part of this axis. Because any deficiency on the parallelism of this power screws will obstruct the motion of the middle tray. The designed Z axis can be seen at figure III.2. At first design the power screws and two more bearing shafts were thought as sufficient, however while producing the axe, four more bearing shafts are thought to make better the design and supplying the parallelism. These shafts are induction hardened shaft with 20 mm diameter. Moreover one chassis is needed for mounting on mother chassis. This design is produced at Tezguller Makine.

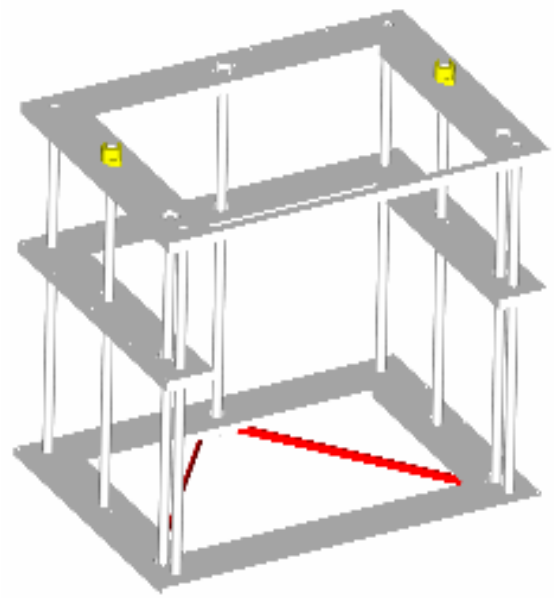

Figure III.3 General View Of The Z Axis Of Preliminary Design.

Table III.2, Standard Parts Used In the Design of Z Axis

No	Part Name	Quantity
1	Ballscrews	3
2	Bearing Shaft	6
3	Belt pulley	1
4	Linear Bushing	3
5	Bearing Bushing	2
6	Shaft end flange	8

III. 2. 1 Calculations For Z Step Motor

Consider a Force F applied at a mean radius r_m which causes the load to be raised. The nut is turning the screw is prevented from turning.

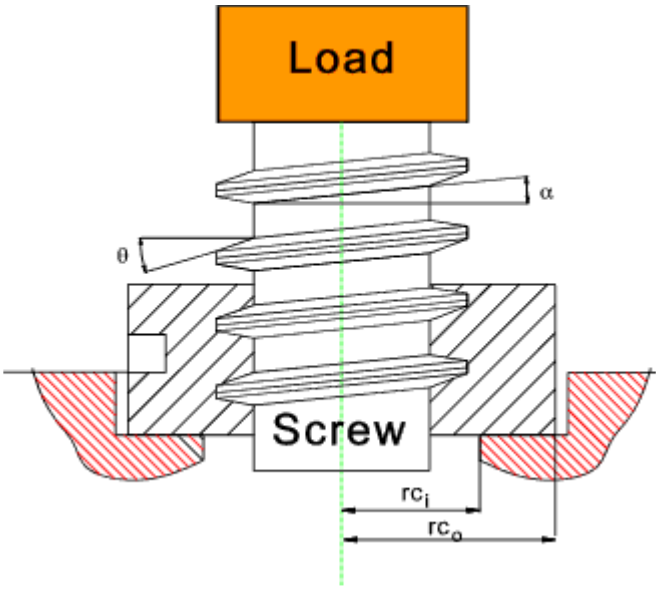

Figure III.4 Load power screw relation

The sketch below identifies the reactive forces acting at point O on the screw thread surface. The reactive force F_n acting normal to the surface has the following components in the plane of interest ABDO.

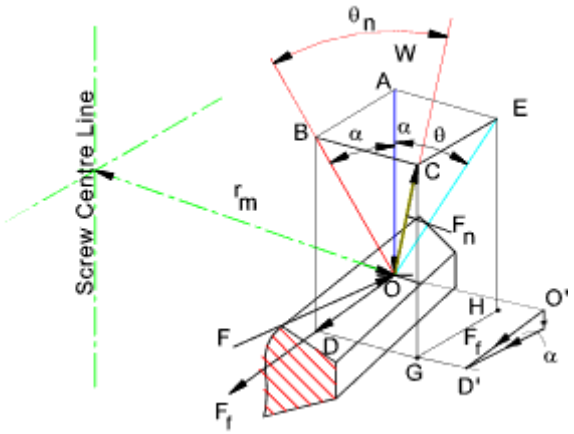

Figure III.5 Reactive forces

OD = F_f which is the friction force opposing movement up the thread surface($F_f = \mu_s F_n$)

- OA = Is equal and opposite to the force being lifted. (W)
- OB = Is the vector sum of OD and OA and forms an angle θ_n with vector (OB $= F_n \cos \theta_n$)

The sketch below illustrates the horizontal and vertical forces acting at a representative point at a radius r_m in the plane normal to the radius. For equilibrium the sum of all vertical forces = 0 and the sum of all horizontal forces = 0

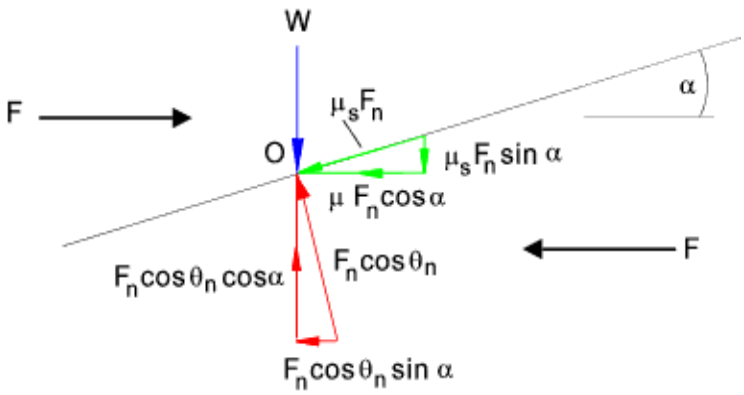

Figure III.6 Illustration of the forces

Summing the forces in the vertical direction results in.

$$\mathbf{F_n \cos\theta_n \cos\alpha = W + F_f \sin\alpha}$$

The coefficient of friction for the screw surface materials is μ_s : $F_f = \mu_s . F_n$ and therefore.

$$\mathbf{F_n = W / (\cos\theta_n \cos\alpha - \mu_s . \sin\alpha)}$$

Summing the moment of the forces around the centerline of the screw to obtain T_R , the torque to raise the load W up the incline of the screw.

$$\mathbf{T_R = F . r_m = r_m . (F_f \cos\alpha + F_n \cos\theta_n \sin\alpha) = r_m . (\mu_s . F_n . \cos\alpha + F_n \cos\theta_n \sin\alpha)}$$ [17]

There is an additional friction torque resulting from the friction force on the thrust collar see top sketch above. This friction force = μ_c. W. (μ_c = coefficient of friction between the screw thrust surface and the collar surface.). This friction torque is assumed to be acting at the thrust collar mean radius r_{mc}

The total torque required to raise the load W is therefore equal to

$$\mathbf{T_R = r_m . (\mu_s . F_n \cos\alpha + F_n \cos\theta_n \sin\alpha) + r_{mc} . \mu_c . W}$$

Substituting for F_n. . see equation A above and replacing r_m by $d_m/2$ . . (and r_{mc} by $d_{mc}/2$)

$$T_R = \frac{d_m W}{2} \left[\frac{\mu_s . \cos\alpha + \cos\theta_n . \sin\alpha}{\cos\theta_n \cos\alpha - \mu_s . \sin\alpha} \right] + \frac{d_{mc} . \mu_c . W}{2}$$

dividing the first term numerator and denominator by cos α results in. .

$$T_R = \frac{d_m W}{2}\left[\frac{\mu_s + \cos\theta_n.\tan\alpha}{\cos\theta_n - \mu_s.\tan\alpha}\right] + \frac{d_{mc}.\mu_c.W}{2}$$

T_r = the torque in Nm to lift the load W (N)

BC = AE = OA tan θ = (OB cosα). tanθ . . therefore tan θ_n = BC/OB = cos α. tan θ . . therefore $\theta_n = \tan^{-1}$ [cos α. tan θ]

For many applications the helix angle is small compared to the thread angle and therefore cos α is approximately equal to 1. e. g. For M20 2. 5 pitch the value of cos α = 0. 999

Therefore it is reasonable to let tan θ_n = tan θ and therefore θ_n = θ. .

For normal screws and fine pitch power screws the above equation for T_R can be written as :

$$T_R = \frac{d_m W}{2}\left[\frac{\mu_s + \cos\theta\ .\tan\alpha}{\cos\theta - \mu_s.\tan\alpha}\right] + \frac{d_{mc}.\mu_c.W}{2} \quad \text{Or more accurately} \quad \frac{d_m W}{2}\left[\frac{\mu_s + \cos\theta_n.\tan\alpha}{\cos\theta_n - \mu_s.\tan\alpha}\right] + \frac{d_{mc}.\mu_c.W}{2}$$

For applications where the thrust is taken on ball or roller thrust bearing the value of μ_c is sufficiently low that it can be taken as approximately 0 and therefore the second term can be ignored. [17]

$$T_R = \frac{d_m W}{2}\left[\frac{\mu_s + \cos\theta\ .\tan\alpha}{\cos\theta - \mu_s.\tan\alpha}\right]$$

Our assumption for the weight of the middle tray and the materials on the tray is equal to totally 500 N and it can be assumed to be static load. 500 N divided into three because of three ball screws.

Dm: 0.02 (m)

W : 500/3 N (per ball screw)

μ_s :0. 003

α : 5 Rad (Helix /lead angle)

θ :15 Rad (Thread angle)

$$T_R = \frac{0.02 \times 2500/3}{2}\left(\frac{0.003 + \cos 15 \times \tan 5}{\cos 15 - 0.003 \times \tan 5}\right)$$

T_R =0. 755 Nm

This T_R is torque per ballscrew so total torque is 2.265 Nm. Depending on this value the step motor which has a 2.4 Nm detent torque is selected for Z axe.

III.3 DESIGN OF SOME PARTICULAR COMPONENTS

At the assembly stage of the mechanical components after mounting standard parts, some problems arise. Some particular components manufactured to solute these problems. These parts are manufactured from aluminum because of their easy manufacturing. These particular components will be explained briefly.

III.3.1 Step Motor Holders

For mounting the step motors on the chassis, there should be some components. These components are designed for easy assembly and rigid standing of the motors without vibration. These parts are produced of aluminum material. Different components designed for each motor depending on their mounting place. The X axis and Y axis step motor holders can be seen on figure III.6

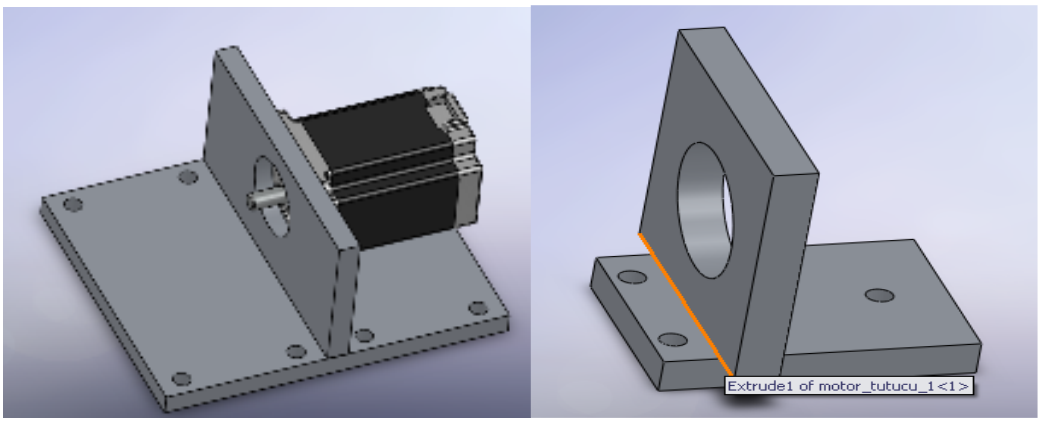

Figure III.7 X -Y Axis Step Motor Holders.

III. 3. 2 Welding Torch Holder

The main function of the robot is making welding. Because of that there should be a welding torch attaching to the head unit. This attachment will be done by the help of a particular component. This component designed and produced according to the torch measurements. The designed and manufactured torch holder can be seen at

figure III.7. The angle between the torch and welding material, and the distance of the torch to the welding material can be adjusted with the adjusting units of the holder.

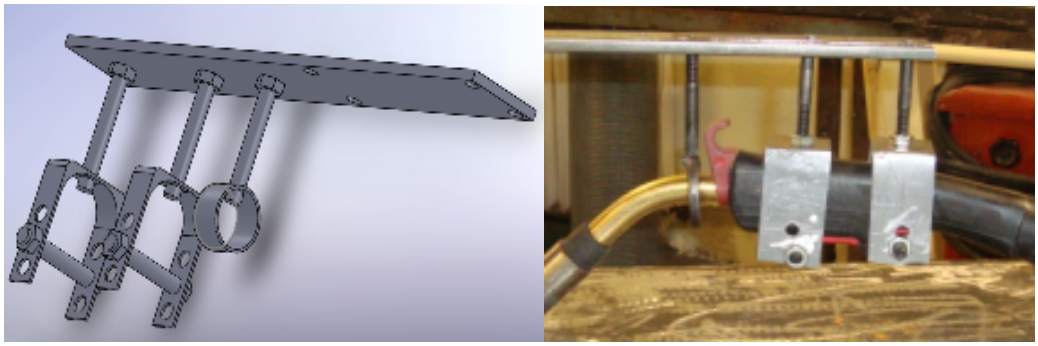

Figure III.8 Welding torch holder

III. 3. 3 Limit and Home Switches Holders

As told above limit and home switches are designed to be used on the robot for safety of the system and homing of the axis. However there should be used some extra components for holding the switches. They are designed to made of from 1,5 mm sheet metal. One hole drilled at the middle of the holder for holding the switch and some small holes drilled for mounting on the machine.

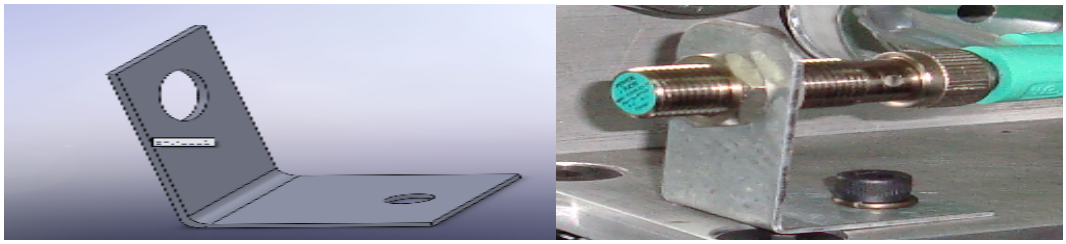

Figure III.9 Proximity Switch Holders

III.3.4 Belt Pulley Holder

Searches of a pulley holder couldn't answer our need and one extra holder is designed for the pulley and pulley shaft. Two holes drilled for the shaft and two more for mounting on the machine. While producing the design some small changes can be made for easing the producing.

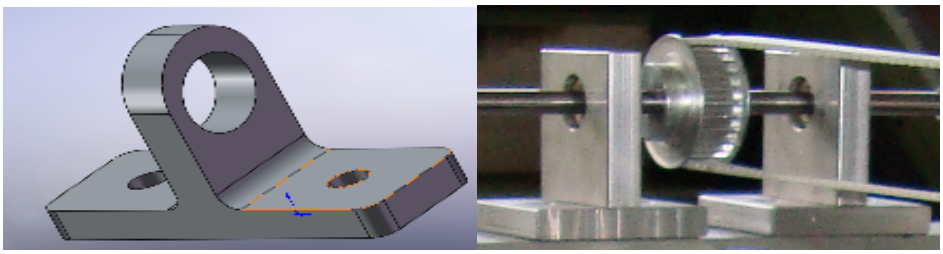

Figure III.10 Belt Pulley Holders

III. 4 ELECTRONIC COMPONENTS OF THE ROBOT

After the design of the chassis and the decision of stepper motors as motion source, driver units of these motors (M2MD806 Bipolar Stepper Motor Driver) were supplied. Also these drivers need to communicate with the computer; to do this serial port interface card (DeskCNC 2nd Generation Controller Board) was supplied. Stepper motors need direct current (DC). In order to supply the direct current, high rating power supply units was also supplied. After the installation of controller units and power units to case, stepper motors are ready to be tested. MarelCNC program was used to generate signals for direction and step amount from serial port.

Afterwards the electrical and electronic works, motion source can be easily and accurately controlled. Now three motions should be combined to move the head all directions smoothly.

III.4.1 Stepper Motor Drivers and Serial Port Interface

Minebea-Matsushita Motor Corporation's 23KM-C723-13V model stepper motors are selected for the X and Y axes, and Marel Makine's MSM34H2120-01IP model stepper motor selected for the Z axe. Calculations only made for Z axe because of load on Z axe and the calculations can be seen above. The specifications of the motors are listed below;

Table III.3 ,Stepper Motor parameters

	23KM-C723-13V	**MSM34H2120-01IP**
Step Angle	1. 8 Degrees	1. 8 Degrees
Drive Sequence	Bi-Polar	Bi-Polar
Rated Current	2 Ampere	6 Ampere
Holding Torque	1. 2 Nm	8. 4 Nm

For three axes, three stepper motor drivers supplied firstly. All of these drivers are M2MD806 Bipolar stepper motor drivers which can support maximum 6A at 80VDC. Each driver needs direction and step signals. These signals will be sent from the computer's parallel port to interface board and then to drivers.

III.4.1.1 M2MD806 Stepper Motor Driver [18]

Stepper motor driver, controls the motion of the motors and directions of their motion according to the signal that come from the controller. Motors work stabilized by the help of drivers. Stepper drivers are the most easy controlled and the least expensive drivers.

Figure III.11 M2MD806 Bipolar Stepper Motor Driver

- Supply Voltage 24…80 V DC
- Output Current 1.8…60A
- Step Modes 1000-2000-5000-10000
- Current Adjustments via DIP Switches
- Clock Frequency 0…400 kHz Max.
- Pulse width (clock) min.1.25 us high/low
- Ambient temperature 0 C…50C
- Thermal protection
- Short circuit and wrong polarity protection
- Optoisolated signal input
- Low vibration, high speed and high torque
- Potentiometer LEC for adjustable current reduction

III.4.2 Software [18]

MARELCNC is used for control software. This software can directly read G and M codes and converts them to signals that are needed for stepper motor drivers. Detailed information can be obtained from users' manual of the program. The parameters of the step motors are adjusted. There are options for adjusting the step increment, acceleration, step range, maximum speed, starting speed etc.

There are two modes for running the machine. First one is direct numerical control, in which the user can run the pre-prepared g-codes and the other one is manual operation. For our application both modes can be used.

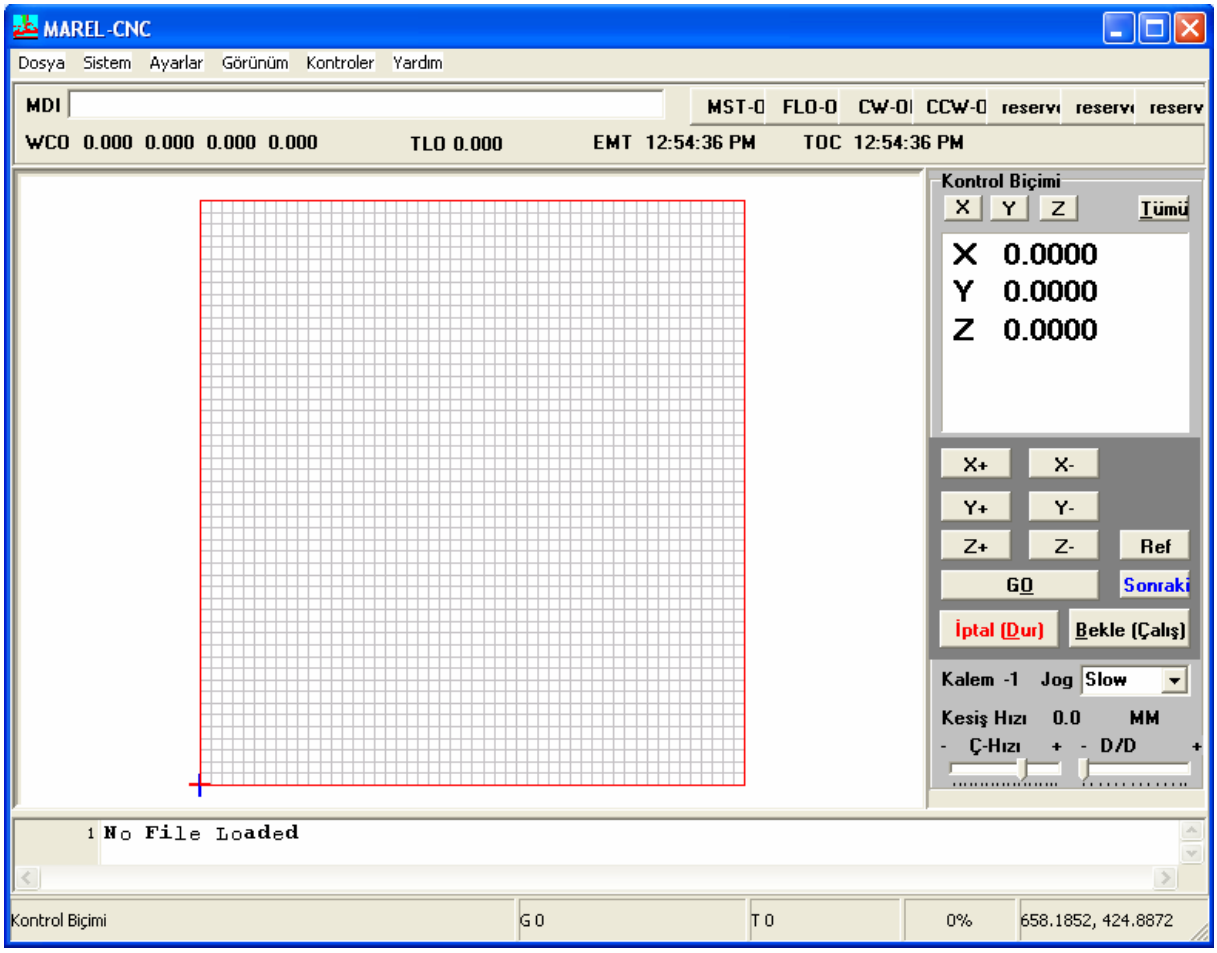

Figure III.12 Screen-Shot Of The MarelCNC Software.

III.4.3 DeskCNC 2nd Generation Controller Board [19]

Desk CNC Controller runs with Marelcnc interface program via the help of a

computer. At the figure III.13 controller card can be seen. At MarelCNC program, the drawings are turned into G codes and these G codes sent to the controller via serial port. The controller which understood the G codes, sent signals to drivers for motion of the stepper motors at a quantity of the desired at the program.

The DeskCNC 2nd Generation Controller utilizes a microcontroller to perform the timing and interpolation functions for smooth operation under Windows.

- Runs smoothly on any system that can comfortably run Windows (95, 98, Me, XP, NT, 2000).
- Fast Block Processing when machine is running (over 300 Blocks/Sec).
- True Linear Acceleration Ramp (programmable) throughout the 60 - 125,000 SPS range.
- Any Accel Profile is programmable.
- True 4 axis interpolation.
- +-2 Billion step Absolute positioning.
- 230 move First In/First Out Buffer.
- RS232 Intelligent Controller running at 115K Baud.
- Continuous Motion Contouring.
- Mist, Flood, CW, CCW, AUX1, AUX2, and AUX3 outputs.
- PWM Output for Spindle Speed Control.
- Single Channel Quadrature Encoder input.
- Flash reprogrammable firmware updates.
- Requires 9 pin Serial Cable.
- Requires 9 Vdc external power supply and enclosure.

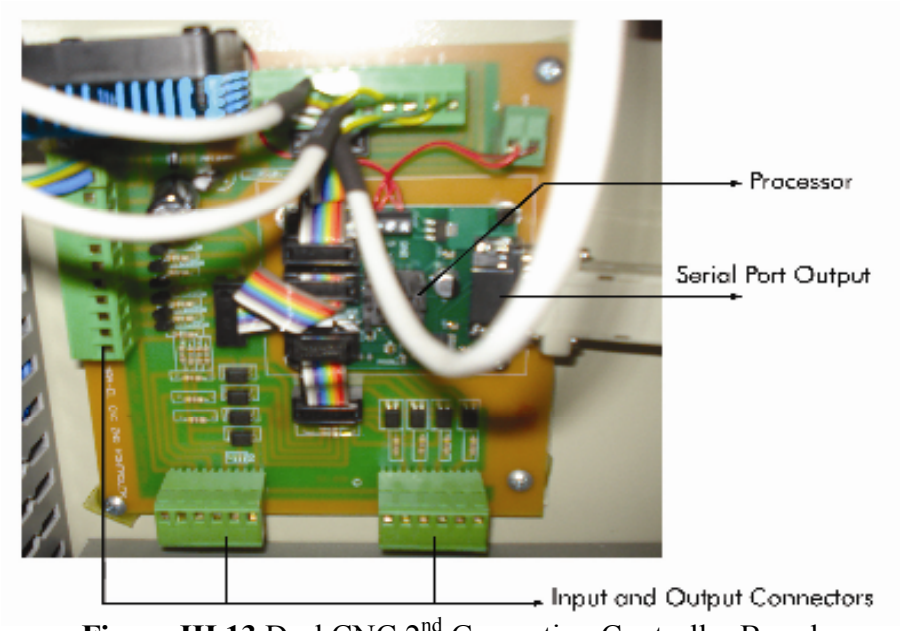

Figure III.13 DeskCNC 2nd Generation Controller Board

III.4.4 Limit And Home Switches [15]

Inductive proximity switches are sensors to detect metal objects within operation ranges. This object distance then translated into an analog output signal proportional to distance , making these sensors ideally suited for measuring and control applications. There are six inductive proximity switches are mounted on the robot for safety of robot and homing of the axes. For example 2 switches are mounted for Z axe, one is at the top side of the chassis, and the other is at the bottom side. When the Z axe approaches these switches less than 4 mm the axe will stop. Two of them is used for limiting the movement, and one of them is also used for homing the axe. The same procedure is current for the other axis.

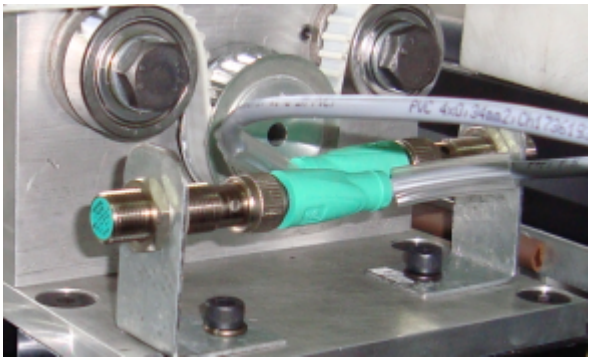

Figure III.14 Proximity Switches

CHAPTER IV

RESULTS AND DISCUSSION

In this project, design and production of a three-axes Cartesian coordinate welding robot was accomplished successfully. Some studies on this subject and Cartesian coordinate systems, numerical control principals, step motors, ballscrews and linear guideways were examined and explained in detail.

Preliminary design of the mechanical components is made by CAD software (Solidworks) and during the manufacturing phase, the robot is manufactured in line with the preliminary design. After the design of the robot, the chassis is manufactured in order to ensure the required support to the mechanical components. Welding and fastening techniques are used to assemble the profiles to each other. Outer dimensions of the robot are 1245x1080x1080 (length, height, depth) and the working area is 500x600x400 (X, Z, Y).

Proper linear guideways and ballscrews are selected and assembled to the chassis in order to provide precise and smooth motion. The step motor selected for axis motion and controlled via step motor drivers, controller and program are supplied for the robot. After being placed on a switch cabinet, the connections of the step motors to the drivers, and the drivers to the controller are implemented. Step motors are then mounted to the chassis and all connections required to transmit the motion to the ballscrews are made with rims.

Connection with the computer is made via its serial port and the interface card. And after this connection is realized test runs of the system are done. After having test runs, the head is designed for welding operation and a welding torch is mounted on the robot. After mounting the welding torch some welding tests were made. Some pictures may be seen below, showing the mechanical assembly of the axis, step motors and welding torch.

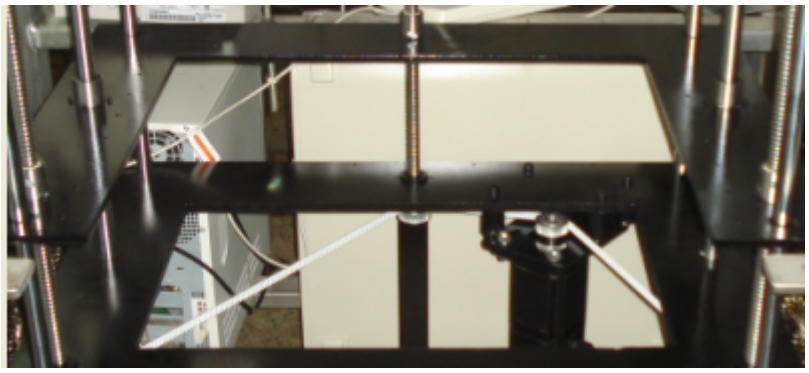

Figure IV.1 Picture Of The Z Axis, Including Step Motor, Bearing Shafts, Ballscrews, Belt and Pulley System

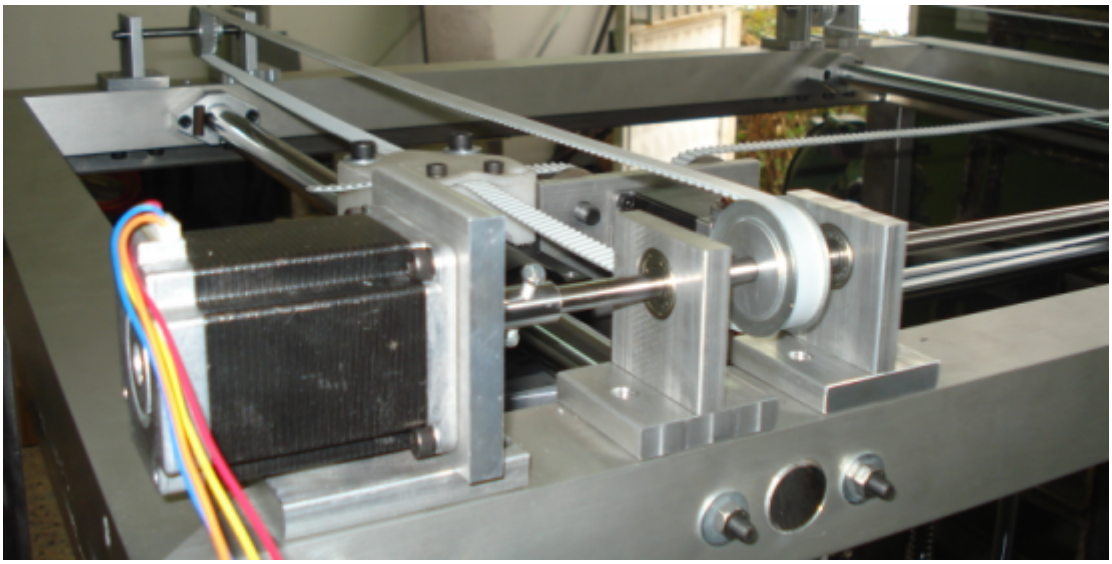

Figure IV.2 Picture Of The Y Axis, Including Step Motors, Shaft, Linear Guideway, Belt and Pulley System,

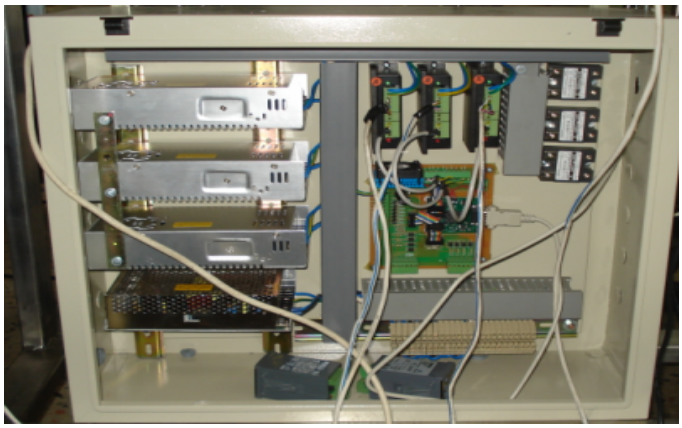

Figure IV.3 Picture Of The Electronic Parts On A Clipboard Including Stepper Motor Drivers, Controller Board, Power Supply Units and Connections

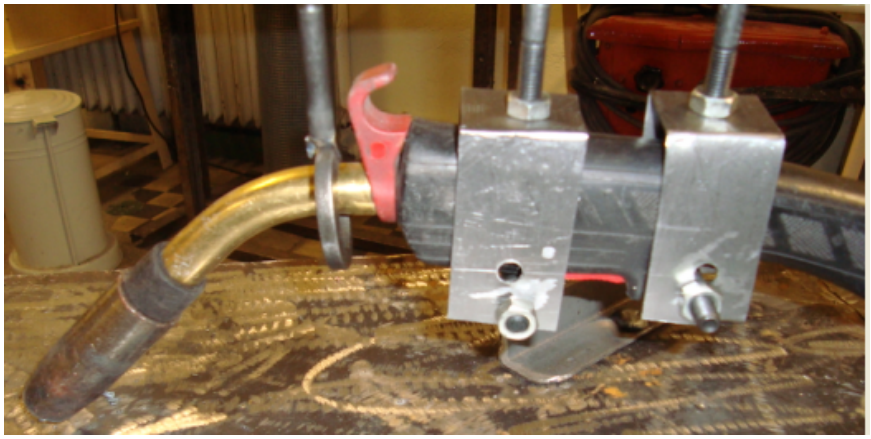

Figure IV.4 Picture Of The Welding Torch And Designed Holder For That.

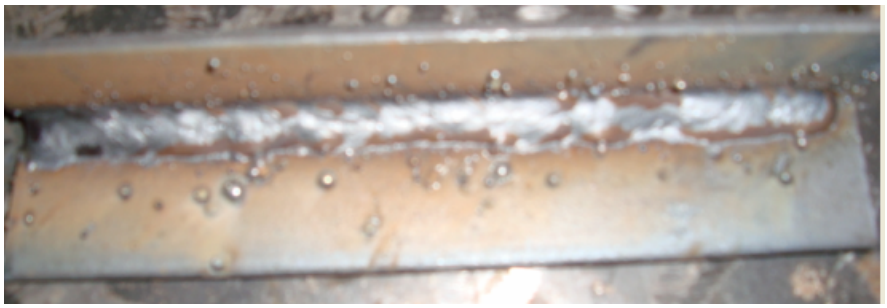

Figure IV.5 Picture Of The Welding Arc That Is Done By The Welding Robot

Figure IV.5 Picture Of The Welding Arc That Is Done By The Welding Robot

CHAPTER V

CONCLUDING REMARKS AND RECOMMENDATIONS

In this project, welding processes, numerical control fundamentals, step motors, are explained in detail and three-axes Cartesian coordinate welding robot design and production has been accomplished successfully.

Required chassis, the X, Y and Z axes are manufactured successfully. Mechanical assembly for linear guideways, ballscrews, belts and pulleys are manufactured and assembled to the chassis. The head is designed for a standard TIG welding machine and parts were manufactured for mounting welding torch. Also electric and electronic parts supplied and assembled to the system with the step motors, drivers and inductive proximity switches.

As a conclusion, the implemented mechanical system achieved all the goals targeted at the beginning of the project. A 3-axes Cartesian system has been produced and has operated without a problem. The head unit is working in synchronization with the 3-axes motion.

Although the design and manufacturing phases finished successfully, it may be concluded that cartesian coordinate robots are not objected for a welding operation. It is probable that a robot that has a higher degree of freedom and an arm-type manipulator is better for a welding robot. The primary reason for the selection of a cartesian coordinate robot for design/production is its easy control and low cost of production. This welding robot can be usable for the welding of small parts and in serial production with huge numbers.

This study has had substantial advantages for learning the mechanical parts of a precise motion and the motion control of mechanical parts. Particulars of step motors etc. are examined in detail for this purpose.

The head unit of this system was designed for not only for welding operations but also for other manufacturing processes. Motion of the axes is same for many kinds of numeric controlled robots, but the head units, may differ for different types.

This robot can, for example, be used as a milling machine or a rapid prototyping machine if the head unit is designed ad hoc.

For future this robot can be used as a part of any type of manufacturing machine, besides it can be used as a welding robot, as originally designed, provided that some improvements are done on the robot. For example the head unit can be designed for more flexible movements to reach more inaccessible parts of the weldments. Moreover the quality of the welding that can be made by this robot should be tested and should be compared with manual welding. Finally the speed of an ideal welding should be inquired and the speed of the robot should be adjusted according to the speed of ideal welding.

REFERENCES

[1] Yumurtacı, S.; Mert, T.: "*Robotik Kaynak Sistemleri ve Gelişme İstikametleri*", MMO Mühendis ve Makine Dergisi, İstanbul, Sayı 526 **(2003)** 1

[2] Cary, H.B,; Helzer S. C.: "*Modern Welding Technology"*. Pearson Education Upper Saddle River, New Jersey:**. (2005).** 4

[3] Eğilmez,M.M.: "*Kartezyen Koordinatlı Kaynak Robotu*", Yük. Lisans Tezi, Yıldız Teknik Üniversitesi Fen Bilimleri Enstitüsü, İstanbul, Türkiye, **(2005)** ii

[4] Büyükşahin, U.: "*Üç Eksenli CNC Tezgah Tasarımı ve Uygulaması*", Yüksek Lisans Tezi, Yıldız Teknik Üniversitesi Fen Bilimleri Enstitüsü, İstanbul, Türkiye, **(2005)** iv

[5] Zeylan, F.: "*Kartezyen Koordinatlı Kaynak Robotu*", Yük. Lisans Tezi, Yıldız Teknik Üniversitesi Fen Bilimleri Enstitüsü, İstanbul, Türkiye, **(2006)** ii

[6] Özyalçın, İ.: "*Kartezyen Robot Tasarımı*", Yüksek Lisans Tezi, Mustafa Kemal Üniversitesi Fen Bilimleri Enstitüsü, Antakya, Türkiye, **(2007)** 9

[7] Aydoğdu, C.İ.: "*Servo Motor Kontrollü Mag Kaynak Makinesi*", Yüksek Lisans Tezi, Gebze Yüksek Teknoloji Enstitüsü Mühendislik ve Fen Bilimleri Enstitüsü, Gebze, Türkiye, **(2007)** 12

[8] Keskin, H.: "*Otomotiv Sektöründe Robot Kaynak Uygulaması*", Yüksek Lisans Tezi, Gebze Yüksek Teknoloji Enstitüsü Mühendislik ve Fen Bilimleri Enstitüsü, Gebze, Türkiye, **(2007)** iii

[9] Lincoln Electric "*The Procedure Handbook of Arc Welding"* Cleveland: Lincoln Electric. ISBN 99949-25-82-2. **(1994).** 3

[10] Weman, K. ; " *Welding processes handbook.* " CRC Press LLC New York:. **(2003).** 26

[11] Kalpakjian, S,; Schmid, S.R.: "*Manufacturing Engineering and Technology"* Prentice Hall. ISBN 0-201-36131-0. **(2001).** 780

[12] Hicks, J.: "*Welded Joint Design"*. New York: Industrial Press. **(1999)** 52

[13] ASM International "*Trends in Welding Research*."Materials Park, Ohio: ASM International. **(2003).** 995

[14] Sapp, M. E. "*Welding Timeline 1900-1950.*" **(2008).** WeldingHistory.org. 2008-04-29.

[15] Pepperl-Fuchs.: ”*Automation Components Catalog”* **(2005)**
http://pepperl-fuchs.com

[16] Robot,Welding.: *“Robot Welding”* **(2007)** http://www.robot-welding. com/ home. htm 22.12.2007

[17] Lemaster, R. A.: “ *Spring 2001 Classes Machine Design Notes*” **(2001)**
http://www.utm.edu/departments/engin/lemaster/Machine%20Design/Notes%2 027.pdf 19.02.2008

[18] Demirtaş, A.; Demirtaş İ.: “*Personal Contact*”(Marel Makine), **(2007)** 09.05.2007

[19] Carken Co.: “*New 2nd Generation Controller Board*” **(2006)**
http://deskcnc.com

[20] Akalın,A.: “*Design And Production Of A New Rapid Prototyping Machine*”, M.ScThesis, İstanbul, **(2005)** 24

[21] Eskiyazıcı, H.:”*Robotlu Kaynak Otomasyonu*” AB Rotech, Bursa, **(2007)**
http://www.turkcadcam.net/rapor/robotlu-kaynak/index. html (02.05.2007)

[22] Vaughan S.: “*Taking a closer look at welding robotics and automation*” **(2002)**
http://www.thefabricator.com/Robotics/Robotics_Article. cfm?ID=490

[23] Grene, R.; Mannion, B.: “*The Pros and Cons of Automated Welding*”, **(1998)**
http://www.assemblymag.com/articles/web_exclusive/d47915323c5c9010 VgnVCM100000f932a8c0_

[24] Bentürk,Ö.: “*Preliminary Design And Control Of A Rapid Prototyping Machine*”, Engineering Project, İstanbul, **(2005)**

CURRICULUM VITAE

Name, Surname	Fatih ARI
Address	Huzur Mah. Cevizlidere Cad. No:111/7 06520 ANKARA
Phone	0 312 296 83 71
E-mail	fatih.ari@tcmb.gov.tr
Date of Birth	15.04.1982

Education

2005 -	M.S. Mechanical Engineering - Marmara University, Institute for Graduate Studies in Pure and Applied Sciences, Istanbul, Turkey
2000 - 2005	B.S. Mechanical Engineering - Marmara University, Engineering Faculty, Department of Mechanical Engineering, Istanbul, Turkey
1997 - 2000	Isparta Süleyman Demirel Fen Lisesi, Isparta, Turkey

Professional Experience

2006- Mechanical Engineer, Central Bank Of The Republic Of Turkey
General Directorate Of The Banknote Printing Plant

Computer Skills

Power user of the following softwares; Solidworks, Mechanical Desktop, AutoCAD, MS Office Applications