THE IMPACT OF CORPORATE HERITAGE DESIGN AND AUGMENTED ROLE IDENTITIES ON CUSTOMER SATISFACTION THROUGH EXPERIENCE. THE CASE STUDY OF TRADITIONAL LONDON TAXI.

A thesis submitted for the degree of Doctor of Philosophy

By

Bedri Munir Ozdemir

Brunel Business School

Brunel University London

2020

Abstract

Purpose: The study aims to explore the relationship between corporate heritage design, augmented role identities and customer behaviour towards the well-known traditional London taxi. The study scrutinises whether the city and national role identities of London black cab positively resonate among the traditional London taxi users. Furthermore, the study examines if corporate heritage design plays a moderator role in the relationship between its perceived identities and user experience.

Design/methodology/approach: This study is a deductive, case study based on positivist research philosophy. Before the main research, augmented identities of the traditional London cab revealed based on initial research with the secondary data. Then, a conceptual framework developed through the relevant literature. Various hypotheses were proposed via the conceptual framework. To test the proposed hypotheses, the research adopted an online survey research method to collect the required data. Surveys were collected via social media channels such as Facebook and Twitter. At the end of the data collection process, as a sample of 523 clean survey responses were received.

Results: The data were analysed by using SPSS and Structural Equation Modelling software SPSS AMOS. Within the context of traditional London taxi, data analysis validated the saliency of both city and national role identity for customer satisfaction. In addition to that, the analysis confirmed the significance of corporate heritage design on customer perceptions and responses of multiple identities (Corporate ID, City Role ID, and National Role ID) attached to the London black cab.

Originality/value: This study differentiates by exploring the antecedents and impacts of corporate heritage design. On top of that, the notion city role identity and its effects are introduced to extend the understanding of corporate heritage. The conceptual framework confirms the moderation of corporate heritage design on the relationship between corporate identity, city role identity, and national role

identity and customer experience. The study also identifies the antecedents of corporate heritage design (Continuity, Familiarity, Functionality, and Aesthetic).

Managerial Implications: The study shows that corporate heritage design is an essential tool to communicate added identities such as national and city identity. Companies acquiring corporate heritage design should maintain those unique design elements whilst updating their products or service to satisfy customers' modern needs. The study also suggests that companies attributed to other identities (e.g. social, territorial, cultural etc.) could increase the customer experience and satisfaction via revealing and communicating those augmented role identities. Lastly, like the traditional London cab, certain corporate heritage assets could become a symbol of a city or territory. Hence city administrators should also consider protecting those corporate heritage symbols to promote and differentiate the cities.

Keywords: Corporate heritage design, augmented role identity, city role identity, national role identity, customer experience, customer satisfaction, London taxi.

Dedication

This doctoral thesis is dedicated to, my father Ali Ozdemir, my mother Ayse Ozdemir, my brother Abdurrahman Ozdemir and my sister Beyza Nur Ozdemir for their enduring encourage and love.

Acknowledgement

First and foremost, I would like to express my gratitude to my principal supervisor, Professor John M.T. Balmer, for his invaluable guidance and support throughout all the years. I would like to also thank my secondary supervisor, Dr. Weifeng Chen, for his continuous encouragement and advice. I am deeply indebted and thankful to both for giving me the opportunity to conduct my research under their supervision.

I am privileged to have been able to work with Professor John M.T. Balmer who is a pioneering scholar on both corporate identity and corporate heritage. He continuous to illuminate on corporate marketing and corporate heritage areas through many acclaimed articles by the academics and thousands of researchers, which gives better understandings to the researchers like me while exploring those phenomena.

I am also thankful to the Ministry of Turkish National Education for supporting me financially as part of a scholarship program during my study. Without their support, I would not have been able to have this research and life experience. I would like to thank Mustafa Karasahin, Osman Duran, Recep Ictuzer, and my father for accepting to be my guarantors to apply for this scholarship.

I would also like to thank Dr. Ammar Sammour for his support. I am also thankful for all the PhD students supporting me in my study. I will be forever grateful especially to my fellow PhD student, Serap Sap. She has had enormous support to me in my academic research. She also helped me a lot to overcome my personal problems. Thank you very much Serap. Besides them, I would like to thank all the people who participated in my study as well as people who helped me in one or another way.

Finally, I am thankful for my parents who have been always supportive all through my educational life. I dedicate this thesis to my parents.

Declaration

I, Bedri Munir Ozdemir, declare that this thesis is entirely based on my own research. I also declare that this thesis has not been submitted for a degree in this or any other university.

I further certify that all ideas, information, analyses and conclusions reported in this thesis has been obtained and presented in accordance with academic rules and ethical conduct.

Bedri Munir Ozdemir

Table of Contents

Abstract *2*

Dedication *4*

Acknowledgement *5*

Declaration *6*

Table of Contents *7*

List of Tables *11*

List of Figures *12*

CHAPTER 1: INTRODUCTION *13*

1.1. Introduction **13**

1.2. Background of the Study **13**

1.2.1 Corporate Identity 14

1.2.2 Corporate Heritage as Unique Corporate Identity Traits 17

1.3. Research Problem and Gaps **19**

1.4. Research Questions **21**

1.5. Research Aim and Objectives **22**

1.6. Research Methodology **23**

1.7. Research Context **24**

1.8. Research Contribution **25**

1.9. Thesis Structure **28**

1.10. Summary **30**

CHAPTER 2: LITERATURE REVIEW *31*

2.1. Introduction **31**

2.2. Theoretical Background **31**

2.2.1 Corporate Heritage Theory 31

2.2.2 Social Identity Theory 32

2.2.3 Symbolic Interactionism 34

2.3. Corporate Identity **36**

2.3.1 Corporate Identity Quality Trait 40

2.3.2 Corporate Identity Country of Origin Trait: 43

2.3.3 Corporate Identity History Trait: 45

2.3.4 Corporate Identity Positioning Trait: 47

2.4. Heritage and Corporate Heritage 48

2.4.1 Corporate Heritage identity and Corporate Heritage Brands 49

2.5. Augmented Role Identities: 53

2.5.1 City Role Identity of London Taxi: 54

2.5.2 National Role Identity of London Taxi: 58

2.6. Heritage Design 61

2.6.1 Design Heritage vs Heritage Design 62

2.6.2 Corporate Heritage Design in Literature: 65

2.7. Customer Experience and Satisfaction 80

2.7.1 Customer Satisfaction 80

2.7.2 Customer Experience 81

2.8. Summary 91

CHAPTER 3: CONCEPTUAL FRAMEWORK DEVELOPMENT 92

3.1. Introduction 92

3.2. Hypotheses Discussion 92

3.2.1 Corporate Identity 92

3.2.2 City Role Identity of London Taxi: 95

3.2.3 National Role Identity of London Taxi 98

3.2.4 The Moderator Effect of Heritage Design: 100

3.2.5 Customer Experience and Satisfaction 102

3.3. Summary 107

CHAPTER 4: METHODOLOGY 108

4.1. Introduction 108

4.2. Research Context 108

4.2.1 Taxi Industry in London 108

4.2.2 The Manufacturer of London Taxis: 110

4.2.3 London Taxi Vehicle 111

4.2.4 London Taxi as a Visitor Attraction 113

4.3. Research Method 115

4.3.1 Research Philosophy 115

4.3.2 Case Study as a Research Approach 117

4.3.3 Preliminary Research with Secondary Data 119

4.3.4 Quantitative Method 122

4.3.5 Sample Selection 125

4.3.6 Survey Design 126

4.3.7 Methods for Data Analysis 128

4.4. Ethical Considerations 133

4.5. Summary 134

CHAPTER 5: DATA ANALYSIS AND RESULTS 135

5.1. Introduction 135

5.2. Sample and Data Collection 135

5.2.1 Pilot Study 135
5.2.2 Main Data Collection 142

5.3. Preliminary Analysis 146

5.3.1 Missing Value 146
5.3.2 Outliers 146
5.3.3 Normality 147
5.3.4 Demographic Characteristics of the Sample 149
5.3.5 Frequency Analysis 151
5.3.6 Reliability Assessment 157
5.3.7 KMO and Bartlett's Test of Sphericity 158

5.4. Quantitative Data Analysis 159

5.4.1 Exploratory Factor Analysis 159
5.4.2 Confirmatory Factor Analysis 163
5.4.3 Construct Validity 165
5.4.4 Hypotheses Testing 169

5.5. Summary 173

CHAPTER 6: DISCUSSION AND CONCLUSION 174

6.1. Introduction 174

6.2. Discussion on Results 174

6.2.1 Corporate Identity 175
6.2.2 City Role Identity 178
6.2.3 National Role Identity 180
6.2.4 Moderator Effect of Heritage Design 183
6.2.5 Reflections on Analysis and Conclusion 187

6.3. Theoretical Contribution 187

6.4. Implications for Practice 193

6.5. Overall Contribution 196

6.6. Limitations of the Research 197

6.7. Future Research Direction 198

6.8. Summary 201

REFERENCES 202

APPENDIX *239*

Consent Form **239**

Survey **240**

London taxi corporate heritage design elements A **245**

London taxi corporate heritage design elements B **246**

Examples of traditional London taxi national role identity: **247**

Participant Information Sheet **248**

Example of traditional London black cab city role identity: **249**

Example of traditional London black cab city role identity: **250**

Structural Models **251**

List of Tables

Table 2.1: AC^2ID TEST, Definitions of Identity Types (Balmer and Greyser, 2002) 39
Table 3.1: Conceptual Model Dimensions, Measures And Relevant Academic References . 106
Table 5.1: Pre-Established Items Adopted from the Existing Literature 136
Table 5.2: Main Data Collection Sources 145
Table 5.3: Skewness and Kurtosis Values..... 148
Table 5.4: Demographics Features of the Sample 149
Table 5.5: The Cross Tabulation Between Income and The Number of Usages 150
Table 5.6: Cronbach`s Coefficient Alpha for Each Construct 158
Table 5.7: KMO and Bartlett`s Test of Sphericity..... 159
Table 5.8: Goodness of Fit Indices 163
Table 5.9: Convergent Validity 166
Table 5.10: Discriminant Validity 168
Table 5.11: Goodness of Fitness Indices 169
Table 5.12: Hypothesis Results 171
Table 6.1: Hypothesis Results 175

List of Figures

Figure 1.1: Flow of Research Process 30
Figure 2.1: Theoretical Framework of the Research 36
Figure 2.2: Antecedents of Corporate Heritage Design 79
Figure 3.1: The Proposed Conceptual Framework 104
Figure 4.1: The Stages of Deductive Approach Bryman and Bell (2011, p.11) 125
Figure 5.1: Relation Between Income and the Number of Usages 151
Figure 5.2: Confirmatory Factor Analysis (CFA) 164
Figure 5.3: Structural Model 1 170

CHAPTER 1: INTRODUCTION

1.1. Introduction

The introduction chapter is allocated to provide an overall view and summary of this doctoral thesis along explaining the background of the study while detailing the literature, purpose and research context. Moreover, this chapter summarizes both theoretical and managerial/practical contribution. The chapter also includes the research methodology and methods informing the current study. At the beginning of the chapter details the background and the context of the research. Then, it details the research problem to verbalise the reasoning of the thesis. Following, the chapter details the research gap, main purpose, research questions and objectives of the current research. Subsequently, research methodology and the research methods adopted in the thesis are discussed. Finally, this chapter articulates the main contributions apropos both theoretical and managerial contribution as well as outlining the structure of the thesis.

1.2. Background of the Study

To differentiate themselves among others albeit attracting potential stakeholders, organisations should acquire and present corporate characteristics unique to them. Scholars in corporate marketing have been discussing to determine the antecedents of those unique characteristics. One of the emerging areas within the realm of corporate marketing is the corporate heritage namely continuous corporate traits has been attracted many scholars' attention over the years (e.g. Balmer, Greyser and Urde, 2006; Urde, Greyser and Balmer, 2007; Blomback and Brunninge, 2009; Wiedmann, Hennings, Schmidt and Wuestefeld, 2011a, 2011b; Hudson, 2011; Balmer 2011b, 2011c, 2013; Burghausen and Balmer, 2014a, 2014b; Bargenda, 2015; Balmer and Chan, 2015, 2017). In a similar vein from the traditional marketing point of view, the salience of heritage to the companies has been articulated by many scholars (e.g. Aaker, 1996, 2004; Simms and Trott, 2006; Fionda, and Moore, 2009; Hakala, Latti and Sandberg, 2011, Rose, Merchant, Orth, and Horstmann, 2016; Pecot, Merchant, Valette-Florence, and De Barnier, 2018).

On the other hand, to a better comprehension of corporate heritage, the notion of the corporate identity should be understood since corporate heritage emerged out of corporate identity realm.

1.2.1 Corporate Identity

In the earlier studies, some practitioners, as well as scholars, focused on only visual elements while investigating the corporate identity (Abratt, 1989; Bernstein, 1984; Feldman, 1969; Olins, 1978; Selame and Selame, 1975). The reasoning to grasp visual characteristics might lay behind the clients' demand tangible solutions on building a corporate identity. Furthermore, the corporate identity used to define as the visual tools assisting the identification of companies among others. Consequently, corporate identity restrained within the design elements such as name, logo, product design, etc. that conveys the corporate identity to the stakeholders (Margulies, 1970; Olins, 1978). On the other hand, further research suggested that corporate identity consists more than visual elements at the same time articulating the significance of design as one facet of corporate identity (Schmitt, Simonson, & Marcus, 1995; Baker and Balmer, 1997; Cees B.M. van Riel and Balmer, 1997; Gray & Balmer, 1998; Balmer, 1995, 2001, 2008, 2017; He and Balmer, 2007; Christensen & Askegaard, 2001; Melewar and Karaosmanoglu, 2006).

The comprehension of changes in corporate heritage could be seen by the various corporate identity definitions over the years. For instance, Selame and Selame (1975) define corporate identity as a statement of visual elements belonging to a firm whereas Bernstein (1984) adds that corporate identity is about visual cues assisting the public to recognize the company among others. However, further studies claim that the scope of corporate identity transcends beyond the visual elements and includes many other dimensions. According to Balmer (2001; p. 254), corporate identity is "The mix of elements which gives organisations their distinctiveness: the foundation of business identities". Later, Balmer and Greyser (2002) suggest a corporate identity framework (AC ^{2}ID) test provide a clear view of both the practitioners and scholars. The framework articulated various type of

corporate identities repectively; Actual Corporate Identity, Communicated Corporate Identity, Conceived Corporate Identity, Ideal Corporate Identity and Desired Corporate Identity, which is detailed in the literature chapter of the study (Section 2.3.). The framework also supported by the idea suggesting that companies acquire multiple identities (Balmer 2008, pp. 893-894). At this point, it should be noted that this study is interested in conceived corporate identity since the research conducted among customers.

Corporate marketing and corporate identity scholars have also been provided suggestions on defining the dimensions of corporate identity. Corporate identity studies agree that quality is one of the significant facets of constructing corporate identity (Downey, 1986; Balmer and Greyser, 2006; Balmer, 2008, 2017). It is asserted that at the organisational level quality is salient to company administration (Balmer and Greyser, 2006). The delivery of promise given by the company to its stakeholders also relates to the quality of service or product (Balmer, 2017). Also, companies delivering a certain quality are considered as reliable, which is another unique differentiating trait of corporations among the rivals (Ingenhoff and Fuhrer, 2010). Likewise, quality could play an essential role in the reputation building process, which leads to a positive resentment from customers (Cravens *et al*., 2003). For instance, in his study on a well-known fast-food chain company, Simpson (1998) unveils that apart from cleanliness, and value, quality is one of the distinguishing characters of the corporation. In another study, Balmer and Greyser (2012) note the impact of quality on its reputation of Swedish car company Volvo. It is also suggested that product or service quality could be a cue for customers to create a certain perception regarding the company (Abratt and Kleyn, 2012). To create positive perception with regard to quality in the mind of customers, companies provide a consistent quality (De Chernatony, 1999; Rowden, 2017) since the perception of quality is salient to the customers with rational choices (David *et al.,* 2005).

Another facet of corporate identity is the affiliation country of origin with a company or its products/services. Corporate identity scholars list the country of

origin as a unique trait seperating from one to another. Scholars suggest that the country of origin could be exploited by the organisations to communicate their corporate identity (Melewar, 2003). Any stereotypes or reputation associated with a product/ service of a certain country is defined as the country of origin image (Piron, 2000, p. 30). Customers might have different approach within different product categories towards different products linked with a certain country (Balabanis and Diamantopoulos, 2004; Watson and Wright, 2000; Cordell, 1992). For instance, Germany has the image of being advanced engineering, whilst Japanese product represents high technology and innovation (Avison, 1997). Additionally, the country of origin could be used as a cue by customers creating perception towards an organisation (Keller, 1993; Balmer, 1998). It could also provide a basement in assessing the quality of product or service (Chao, 1998). As an example, some empirical studies exhibit that British customers showed positive attitudes towards British car brands comparing vehicles made in other countries (Balabanis and Diamantopoulos, 2004, Mohd Yasin *et al*., 2007). It is also shown that familiarity with a specific country could impact customer evaluation of a certain product or service (Ahmed and d'Astous, 2008).

Companies could also stand out among others via different positioning strategies. Market positioning is described as an essential dimension of corporate identity in various studies (Golnick, 1985; Schmidt, 1995; Marwick, 1997; Melewar, 2003). Market positioning at the corporate level is the corporate effort to impact the judgement regarding a product, brand or service against the competitors (Balmer and Greyser, 2006, p. 736) In a broader perspective it is described as "…whether there are inconsistencies between what the organisation makes, does and behaves and how the organisation positions itself to other organisations and in the minds of key stakeholder groups" (Balmer, 1998 p. 982). On the other hand, positioning strategies within a marketplace could vary based on the organisational structure (Melewar, 2003). To distinguish themselves among others in a meaningful and favourable way, companies could use market positioning as a unique corporate identity trait (Balmer, 2017). However, it is suggested that the effects on customer perception of a company could change based on different positioning strategies (Fuchs and Diamantopoulos, 2010). Those strategies might consist of visual

identity programs (Marwick, 1997), communication strategies such as slogans, mission statements, or advertisement campaigns (Grey and Balmer, 1998). Furthermore, it is also suggested that continues heritage traits could be also used as a platform to discern a company from the rivals (Urde *et al*. 2007).

The last corporate identity dimension discussed in the literature is the history trait. Scholars suggested that history is among the unique features confining corporate identity (Moingeon and Ramanantsoa, 1997; Melewar and Karaosmanoglu, 2006; Abratt and Kleyn 2012; Balmer, 2017). In a parallel vein, scholars interested in customer-based research also articulates the saliency of the history to the companies (Aaker, 2004; Netemeyer *et al*., 2004; Lehman *et al.,* 2008; Merchant and Rose, 2013). Some scholars assert that there is a strong relationship between history and the identity since identity is the product of the history of a company (Moingen and Ramanantsoa, 1997). Moreover, others claim that history could be one of the answers to the question of what an organisation is while identifying the corporate identity of a certain company (Balmer, 1998). On the other hand, some companies might prefer utilizing the real history and heritage (Beverland and Luxton, 2005), others might choose to create fiction-based history to create positive perceptions (Beverland, *et al*. 2008, Holak *et al*., 2008). Companies with a rich history and heritage could receive a positive reaction from the customers. It is suggested that long history and heritage create specific juxtaposition in the mind of customers (Aaker, 2004) besides enriching the company personality (Keller and Richey, 2006). It is suggested that there is a consistency in positive image building if customers consider a company attaining a long history (Netemeyer *et al*., 2004). In a similar way, corporate marketing scholars emphasise the saliency of heritage to the organisations. The next part provides overviews on the emerging notion of corporate heritage from the related literature.

1.2.2 Corporate Heritage as Unique Corporate Identity Traits

The notion of heritage has been attracted to the attention of scholars from various disciplines. Even though the common meaning of the subject is to inherit, there

has been a debate over the academic reflection on the description of heritage since most practitioners vocalise a different definition (Harvey, 2001). Many establishments such as UNESCO has articulated the definition of heritage over the years. In the beginning, UNESCO described heritage as only tangible heritage (e.g. ancient ruins) while adding natural heritage (e.g. Amazon forests), and intangible heritage (masters of a certain traditional artefact) to create a classification (Kirshenblatt-Gimblett, 2004). Different heritage types have been assessed on a different level such as individual, regional, or community level through other disciplines like history, sociology and so on.

On the other hand, corporate marketing scholars recently suggest that heritage might be salient to the companies. Consequently, corporate marketing scholars has displayed an increasing attention to the heritage phenomenon (e.g. Balmer, Greyser and Urde, 2006; Urder, Greyser and Balmer 2007; Balmer 2011a, 2011 b, 2013; Blombäck and Brunninge, 2009; 2013, Wiedmann, Hennings, Schmit and Wuestefeld, 2011a, 2011b; Hudson, 2011; Burghausen and Balmer, 2014a, 2014b; Bargenda, 2015; Rindel, Santos and Lima, 2015; Santos, Burghausen and Balmer, 2016; Balmer and Chen, 2017; Pecot, Merchant, Valette-Florence, and De Barnier, 2018; Pecot, and De Barnier, 2018; Brunninge, and Hartmann, 2019; Spielmann, Cruz, Tyler, and Beukel, 2019; Pizzi, and Scarpi, 2019; Balmer, and Burghausen, 2019; Iglesias, Markovic, Singh, and Sierra, 2019). In like manner, traditional marketing scholar at product level also articulated the significance of heritage as part of consumer-based brand equity (e.g. Aaker, 2004; Fionda *et al*., 2009; Hakala, Lätti, and Sandberg, 2011; Rose *et al*., 2016; Pecot *et al*., 2018).

The early conceptual corporate heritage studies on different monarchies imbued with corporate heritage brand identity (Balmer *et al*., 2006; Urde *et al*., 2007; Balmer, 2011b, 2011c) unveils that corporate heritage could be salient to other types of organisations as well (Balmer *et al*., 2006). Corporate marketing studies scrutinise the notion of heritage at both corporate identity (Balmer, 2011c; 2013; Burghausen and Balmer, 2014a, 2014b, Bargenda, 2015) and corporate brand level (Urde *et al*., 2007; Wiedmann *et al*., 2011a; Rindell *et al*., 2015; Santos *et al.,* 2016; Balmer and Chen, 2017). Corporate heritage identities and corporate heritage brands are different from each other. Corporate heritage identity refers

to the specific and continuous multiple-faceted identity traits meaningfully connected to past, present and prospective future (Balmer, 2011c; Burghausen and Balmer, 2014a). However, corporate heritage brands attain long-lasting corporate brand promises being linked with all three temporal layers; past, present, and future (Balmer, 2013).

As stated earlier in this section, corporate heritage is scrutinised by corporate marketing scholars in a different context. One of the earliest studies unveils that Monarchies could exploit its existing heritage to satisfy the demands of different stakeholders (Balmer *et al*., 2006). On the other hand, certain corporate brands could benefit from their heritage to create a differentiation strategy among other companies (Urde *et al*., 2007). It is also asserted that corporate heritage could affect the discernment and behaviour of customers towards certain companies (Wiedmann *et al*., 2011a, Wiedman *et al*., 2011b; Balmer and Chen, 2017). Apart from that companies imbued with heritage could reposition itself through revealing their corporate heritage (Hudson, 2011; Santos *et al*., 2016) as well as recovering from a structural brand crisis by revitalising their corporate heritage (Cooper, Merrilees, and Miller, 2015). However, companies should acquire stewardship mindset to protect and use corporate heritage as a strategic source (Burghausen and Balmer, 2015).

1.3. Research Problem and Gaps

As stated in the previous sections, the emerging subject of corporate heritage is quite latent to the new researches. After proceeding relevant literature review, there are some subjects that need to be addressed in detail in order to fill the existing gaps. Even though the notion of corporate heritage has been drawn the attention of corporate heritage scholars, there is a lack of empirical scrutiny on both corporate heritage brands and corporate heritage identities (Balmer, 2011c). Therefore; this section discusses the existing gaps in the corporate heritage literature.

Although there are many corporate heritage traits (Balmer, 2013), augmented role identities are one of the critical identity types associated with a company imbued with heritage. Over a certain time, some companies imbued with identities connected to other social identities such as territorial, social, class, cultural and so on (Balmer, 2013). It is asserted that customers might tend to associate certain corporations with other identities (Keller, 1993). Augmented role identities attributed to a company could polish the corporate identity (Balmer, 2011a). Some studies validate that customer behaviour is impacted by national and cultural associations (Wiedmann *et al*., 2011a). Monarchies with imbued heritage could also be an example of those institutions acquiring augmented role identities such as national and territorial role identities (Balmer, 2011). In another empirical study, Burghausen and Balmer (2014) reveal the association between Britain's oldest Brewery Company Shepherd Neame and UK's brewery heritage. On the other hand, Balmer and Chen (2017) exhibit that there is a strong connection with the Chinese pharmacy company Tong Ren Tang' imperial identity and customer satisfaction. However, there is still a lack of empirical study on different augmented role identities and customer behaviour. Thanks to its meaningfulness, augmented role identities could be a platform to enrich different facets of customer experiences such as affective and social experiences (Brakus *et al*., 2009) since customers also seek experiences to satisfy their emotional and social needs (Schmitt, 1999a).

Another latent subject within the corporate heritage realm is the corporate heritage design elements. Corporate heritage design is defined as "The pursuance and continuance of certain design features vis-a` -vis products, graphic design, architecture, livery, etc. can accord an entity with heritage distinctiveness if it has prevailed over time. Also relates to the coherent visual system is in place (corporate design/house style/ visual identity)" (Balmer, 2013, p. 310). Urde *et al*. (2007) suggest that symbols of corporate heritage brands could be a vital tool to communicate the core values of the brand. Another study on a well-known cruise company Cunard discloses that interior heritage design elements could play a significant role regarding heritage strategy (Hudson, 2011). Furthermore, in her

study on a French financial organisation, Bargenda (2015) concludes that architectural heritage design could be exploited on corporate identity creation as well as the differentiation process. Another study in connection with corporate image creation reveal that any major change on existing corporate heritage design elements receive negative responses from the customers thinking the company does not keep its promise on the protection of its heritage value (Rindell *et al*., 2015). On the other hand, in their longitudinal study regarding a Portuguese soap and cosmetic company Ach Brito, Santos *et al*., suggest that companies could reposition themselves through revitalising their corporate design heritage. Finally, Balmer and Chen (2017) suggest that long-lasting Chinese pharmacy company Ton Ren Tang uses the colour to communicate its Chinese Imperial role identity to the customers. Although the studies mentioned above observe corporate heritage design at the corporate level, there is still a lack of research on how corporate heritage design resonates among customers. On top of that, some the corporate heritage scholars call for more scrutiny and validation on the corporate heritage design phenomenon through further empirical studies (Bargenda, 2015; Rindell *et al*., 2015; Santos *et al*., 2016).

1.4. Research Questions

To address the problems mentioned above, this thesis pursues to answer questions stated below as:

1. What are the subsequent outcomes of corporate identity on customers?
2. Is there any augmented identity accorded with the research subject? If so, do augmented role identities have any influence on customer behaviour?
3. What are the antecedents and consequences of corporate heritage design as well as customers' reaction towards the corporate heritage design elements?
4. Does corporate heritage design have any role in the communication of corporate and augmented role identities?

In order to answer the questions above Chapter 2 discusses the related literature and defines the antecedents of the concepts pertaining to research questions. On the other hand, in Chapter 3 develops a framework as well as hypotheses to answer the relational part of the questions. Chapter 4 designs the empirical examination of the proposed framework. Then the empirical analysed in Chapter 5 whilst Chapter 6 consists of the discussion and conclusion to answer the other research questions.

1.5. Research Aim and Objectives

The aim of the research is to scrutinise the following concepts as:

a. The relationship between perceived corporate identity and customer satisfaction through experience.

b. The impact of certain augmented role identities on customer satisfaction mediated by customer experience.

c. The moderating effect of corporate heritage design on the relationships between corporate identity, augmented role identities, and customer experience.

In order to achieve the aim of the current research, the following objectives are defined as:

1. Conducting preliminary research in order to determine the unique augmented role identities associated with the case.

2. Review of relevant literature in order to define the antecedents of corporate identity, augmented role identity, corporate heritage design and customer experience as well as customer satisfaction.

3. Developing a theoretical framework to illuminate the relationships between the relevant researches' constructs.
4. Designing and testing the hypotheses in the theoretical framework for companies with corporate heritage.
5. Suggesting both theoretical and managerial implications to researchers as well as practitioners.

1.6. Research Methodology

To answer the second research question, this study conducted preliminary research through observation of secondary data sources such as press release, company website, and social media websites, and customer comments pertain to traditional London taxi. On top of that, some personal observation also included such as a short visit to the Transport by Design 2016 festival featuring London transportation vehicles including traditional London taxi. The festival organised by TFL (Transport for London) provided the researcher with the opportunity to interact with stakeholders pertaining to London taxi.

The case of London taxi is deliberately chosen thanks to its informational richness and the significance with managerial implications. After defining the augmented role identities of London taxi, an immense literature review conducted on relevant literature to detail all the constructs. Consequently, based on the literature review, each construct has been defined and operationalised to measure the conceptual framework.

After determining items on the literature, the questions are discussed with a few corporate heritage scholars as well as researchers in the corporate marketing area. Then, a pilot study conducted to test and clarify the questionnaire for the main quantitative study. Based on the exploratory factor analysis of data collected in the pilot study some dimensions (Customer Experience- Behavioural and Intellectual) were removed. The final stage of the main data collection conducted in 2018, June and July. Convenient sampling technique is used because of its

efficient nature (McDaniel and Gates, 2012). Online surveys were targeted the social media webpages (some of them with over a million members) having direct (e.g. London Transport Museum Facebook Page), or indirect (e.g. Londonist, Timeout London, Visit London Facebook, Twitter and Instagram pages) relationship with the traditional London taxi as they share London taxi related posts and topics. The initial analysis of online pages reveals that London Taxi news or posts were shared as a content leading interaction and comments from the members. The targeted webpages were chosen based on the number of pages and member's interest in the research subject. The research reached out to 694 people in total while the number of the completed survey was 556. As it is suggested that the proposed model and hypotheses' analyses require large samples to use the SEM method (Hair *et al.*, 2010).

Finally, after the completion of the data collection stage, the current research immersed in a meticulous process to validate the constructs of survey items by performing a series of analyses. The statistical software SPSS 25.0 and AMOS 25.0 software were used to perform structural equation modelling which confines an effective series of analysis techniques to validate and test a proposed model.

1.7. Research Context

This study aims to contribute corporate heritage realm through observing the effects of corporate heritage, mainly corporate design heritage and augmented role identities, on customers' experiences and satisfaction with traditional London taxi. Some corporate heritage scholars call for further research on different context including UK brands (Balmer and Chen, 2016) in a study on Chinese Heritage Company. This is one of the main reasons for the current research and selection of the case study. The research context will be iconic London Taxi. The subject of the study is London Taxi (namely black cab) encapsulating corporate heritage trough continuous design elements (carrying similar design features for a long time with a relative change) plus different role identities that have attached to it by stakeholders (representing the city of London and Britishness as an iconic British design).

It is suggested that the case study is one of the most convenient approaches for open to question social phenomena which requires detailed understanding because of its complexity (Yin, 2009, p.9). On the other hand, an experiment or survey could be preferred by researchers regarding the approaches adapted for the case study (Yin, 2009). It is significant to remind that this study mainly places itself under the field of corporate heritage and the single case method have been utilised for the emerging subject of corporate heritage. Following the fact that single case study have been popular among the scholars who have been conducting research in the field of corporate heritage (Balmer 2011; Hudson, 2011; Burghausen and Balmer 2014, 2015; Urde and Greyser, 2015; Rindell *et al*, 2015; Bargenda, 2015; Santos *et al*, 2016; Balmer and Chen, 2017; Maier and Andersen, 2017), the current research also adopt the single case study method.

Since the heritage design and its perception was one of the main subjects of the research, the dominant continuous design elements of traditional London taxi is one of the reasons behind its selection as the main case. In addition to that the associated meanings with a corporate heritage assets, which is defined as role identities, are also significant part of the research since corporate heritage studies have been placed importance on the subject of different role identities (Balmer 2011; Balmer 2013; Burghausen and Balmer 2014; Bargenda 2015; Balmer and Chen 2017; Schroeder *et al*., 2017). Initial research revealed that traditional black cabs have the potential to provide a platform to answer those research questions. All these factors mentioned above assist the researcher to select traditional London taxi as the context of the current study.

1.8. Research Contribution

Although the notion of traditional heritage has been attracted by many scholars, there is a lack of knowledge on the emerging subject of corporate heritage. Hence, the latent area has many questions to answer by scholars. Corporate heritage is the ongoing traits that relate to an organisation past, present and future. Those

features if protected could give advantage to companies to differentiate themselves among others. Companies with corporate heritage could be perceived as stable by the stakeholders of many generations (Balmer and Chen, 2017). As a result, it stipulates more exploration and observation shine a light on this topic within the corporate marketing realm. This study aimed to add some theoretical insights as well as practical suggestions through observing one of the well-known corporate heritage entities namely, traditional London taxi. One of the main theoretical contributions of the study to develop a model including to observe the relationships among heritage design, corporate identity, augmented role identities, and customer behaviour. On the other hand, the study also makes a contribution by validating the model through empirical data. This study makes theoretical contributions by introducing city role identities as an augmented role identity. On top of that, the notion of corporate heritage design was explained by defining the antecedents.

The study also added to the corporate identity field by defining antecedents. On top of that corporate identity impact on customer behaviour tested via the proposed model. The research empirically proved that there is a positive relationship between corporate identity and customer satisfaction as a result of experience within the traditional London taxi context. This study adds on augmented identity notion by exploring the impact of traditional London taxi's national identity association with Britain via testing its impact on customer satisfaction through experience. The study makes a theoretical contribution by defining the city role identity and its dimensions. The study also tests the subsequence of city role identity regarding customer behaviour within the context of traditional black cab. The current study among traditional London taxi users contributes to the corporate heritage literature by defining city role identity as another augmented role identity. On top of that, the study validates its impact on customer experience via conducting empirical research among customers. As it mentioned at the beginning of the section, one of the theoretical contributions of the research is defining the layers of Corporate Heritage design while providing validation of its moderation effect on related corporate identities and customer experience. Finally, the proposed model validates that traditional London taxi's

corporate heritage design has a moderator effect on the relationships between corporate identity, national role identity, city role identity, and customer experience.

The study also makes managerial contributions for the companies imbued with certain corporate heritage characteristics. This study proves that corporate heritage traits have an impact on consumer behaviour. Focusing on corporate heritage design, the hypotheses shows that costumers desire continuity on familiar design characteristics of traditional London taxi. Hence, managers should take continuous heritage design elements while manufacturing a new product or service. In a similar vein, this study finds that both the city and national role identity of traditional London taxi positively impacts customer satisfaction via customer experience. Hence, the managerial team of companies with associated identities should identify if there are any extra associated identities attributed to their product or service. After the identification process, companies should integrate those identities, adding extra meanings to the product/service, in their marketing and communication programs since it might receive a positive response from the customers. Although the study does not reflect opinions from the other city stakeholders such as city administrators, it provides a wider scope by transcending from the company to the city. Although some icons might not fit with the newer city identity strategies (Truman *et al*, 2006), dynamic icons such as traditional London taxi could adapt itself to those strategies. For instance, in recent years, London city administration initiated to be an eco-friendly program to decrease the air pollution in London. Although many other companies made an offer to produce new electric taxi vehicles as an alternative to the traditional London cabs, the London Taxi company responded by manufacturing newer electric models while maintaining iconic design elements of the existing taxis. Hence, the city administrators should collaborate with this type of corporate heritage organisations to maintain its iconic features communicating city identity.

1.9. Thesis Structure

This thesis is divided into various chapters. The design of the thesis structure is explained below as:

Chapter 1 of the thesis initiates the study by introducing the research background. Further down the chapter research problem, gaps are addressed whilst defining the research questions, aim and objectives. In addition to that, the chapter shed lights on the research context, research methodology, and research contribution. Finally, this chapter closes with the explanation of the thesis structure consisting of all the chapters.

In Chapter 2, the review of relevant literature is discussed to determine the antecedents of the research constructs including, corporate identity, corporate heritage design, augmented role identities, customer experience, and satisfaction. The chapter provides bases on developing a theoretical framework within the following chapter.

Chapter 3 includes the development of a theoretical framework to clarify the relationships between the relevant constructs. On top of that, this chapter proposed hypotheses are defined in order to answer various research questions.

Chapter 4 starts with the background of traditional London taxi as the research context of the current study. Further on the chapter, the research methodology and methods are discussed to empirically test the proposed model developed in the previous chapter.

Following the details of the research methodology in Chapter 4, Chapter 5 demonstrates the process of clarifying measurements through the application of quantitative methods like factor analysis commonly used by scholars. The goodness of fit indices of the conceptual model is also discussed. Furthermore, this chapter provides the empirical results based on the surveys conducted among the customers by using the structural equation model (SEM) method on the software called SPSS.

Finally, Chapter 6 starts with the discussion of results under the light of relevant literature. The chapter continues with presenting the theoretical and practical contributions for scholars and managerial team of corporate heritage companies. Additionally, the limitations pertaining to conceptual, empirical and methodological ways are demonstrated to be considered in future researches. In the final part of Chapter 6, further research suggestions are made based on the current study and its results.

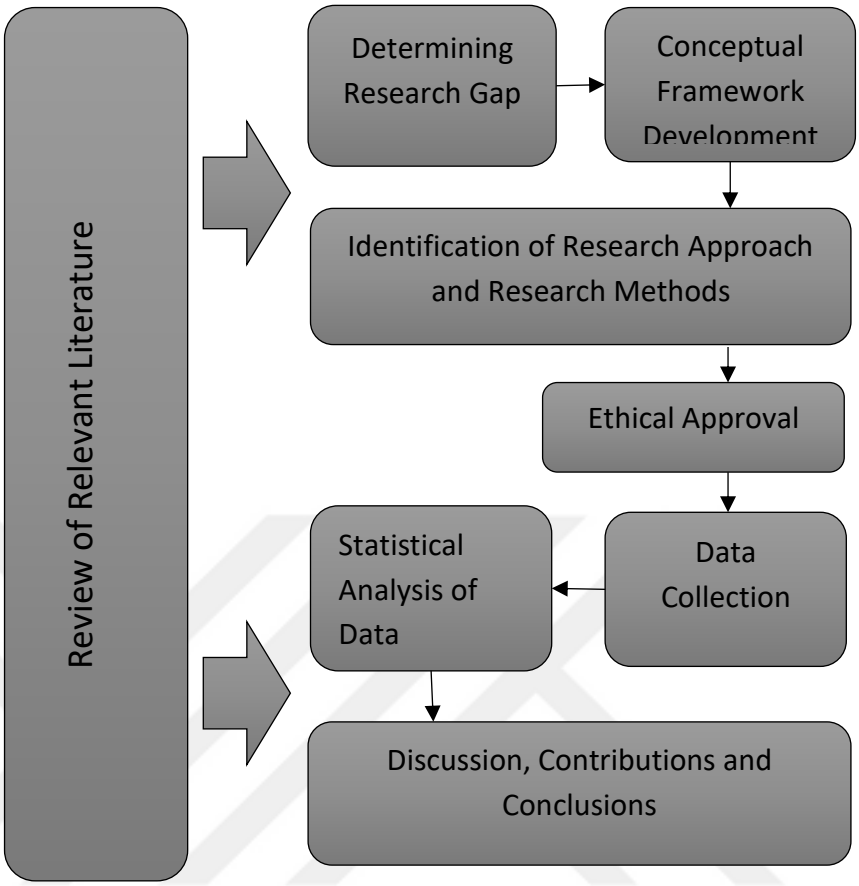

Figure 1.1: Flow of Research Process

1.10. Summary

The introduction part (Chapter 1) of the study briefly elucidates the current research chapter by chapter. The section begins with delineating the background of the study. Then, research problem, gaps, aim and objectives are presented. Furthermore, the selected research approach and methods are clarified. On the other hand, the next section addresses the research context in detail. Later, the theoretical and managerial contributions of the current research are demonstrated in the section. Finally, the chapter ends with illustration of thesis structure through synopsis regarding each section. The next segment (Chapter 2) of the thesis goes through the review of relevant literature in detail.

CHAPTER 2: LITERATURE REVIEW

2.1. Introduction

In this section, the main theories and the literature that informs the study are scrutinised. First, the theories which the current research grounded on are explained in detail. Those theories are respectively, Corporate Heritage Theory, Social Identity Theory and the theory of Symbolic Interactionism. The explanation of the theories is followed by the literature review pertaining to the concepts and ideas of the study. Then the chapter delves into the corporate identity, corporate heritage, and heritage design, augmented role identities, customer experience and satisfaction that composes the main headlines of the literature review section.

2.2. Theoretical Background

2.2.1 Corporate Heritage Theory

The notion of corporate heritage emerges from the scholars of corporate marketing as part of corporate identity. Because of technological development, reaching knowledge and production technology, companies could easily compete with other companies. In a saturated marketplace, companies need to differentiate from others. At this point, corporate identity as unique differentiating characters of a company was suggested by corporate marketing scholars (Baker & Balmer, 1997; Balmer, 1995; He & Balmer, 2007; Melewar & Karaosmanoglu, 2006; Cees B.M. van Riel & Balmer, 1997). On the other hand, within the corporate identity, there are some unique stable characteristics of companies and it could be exploited by organisations to accomplish their desired aims.

Corporate heritage is defined as specific continuous identity traits of a company, having multiple facets while meaningfully affiliate the organisation's past, present and prospective future (Burghausen and Balmer 2014, Balmer, 2011). If a brand puts its corporate heritage in the centre, then it could be classified as corporate heritage brand (Balmer 2013, Burghausen and Balmer 2014).

Some stakeholders such as customers might tend to create connections between a corporation and other entities (Keller 1993). Corporate heritage theory assists scholars to comprehend these connections. Corporate heritage identities draw their power from the possible tie with social collective memory and capturing and conveying specific associated identities throughout time (Balmer 2011, Hakala *et al*., 2011). It is suggested that some corporate brands especially heritage brands are usually associated with culture or places over a period (Balmer and Chen, 2015; Burghausen and Balmer, 2015). Hence those types of companies might have additional role identities that are linked with a place, group, society etc., (Balmer 2013) and could influence stakeholder behaviour such as customer satisfaction (Balmer and Chen, 2017).

Another subcategory of corporate heritage is corporate heritage design which is defined as "The pursuance and continuance of certain design features vis-a` -vis products, graphic design, architecture, livery, etc. can accord an entity with heritage distinctiveness if it has prevailed over time. Also relates to the coherent visual system is in place (corporate design/house style/ visual identity)" (Balmer, 2013, p. 310). A study on financial sector proposes that corporate history could be transformed into corporate heritage via design elements of architecture as the spatial and material manifestation of the institutional past (Bargenda, 2015).

Since this study intends to scrutinise augmented role identities and heritage design of traditional London taxi besides their impact on customer behaviour, corporate heritage is one of the main theories to inform the current research.

2.2.2 Social Identity Theory

This section discusses another main theory, Social Identity Theory, as this study is also informed by Social Identity Theory. The notion of social identity theory is mentioned and defined in the seminal work by Tajfel and Turner, (1979) in order to seize the main reasons on discrimination within a group as well as to anticipate certain behaviours regarding group members. The principal suggestion of the social identity theory is that one of the components of the self-concept is social identity. Social identity is attained and preserved by containing a membership in

a group which is positively classified by the individual comparing to other groups (Tajfel & Turner, 1979). The developers of the theory later advanced the theory by suggesting that individuals might relate themselves to companies or groups with regard to define their self-concept (Tajfel & Turner, 1985). In the interest of fostering the theory, some scholars asserted that "people classify themselves into social categories on the basis of various factors, such as the organisation they work for, and that membership in these social categories influences an individual's self-concept" (Turban and Greening, 1997, p.660). On the other hand Hogg and Terry (2002, p.3) proposed the core of social identity theory as "a social category (e.g. nationality, political affiliation, organisation, workgroup) within which one falls, and to which one feels one belongs, provides a definition of who one is in terms of the defining characteristics of the category – a self-definition that is a part of the self-concept". Accordingly, an individual is able to define oneself depending on the membership within a different sort of social groups such as an organisational, professional or educational based on the social identity theory (Ashforth & Mael, 1989; Tajfel & Turner, 1985).

Social identity theory has grasped the attention of scholars in various realms and was adapted to discern identification among customers (Bhattacharya and Sen, 2003; Currás-Pérez *et al*., 2009; Aspara and Tikkanen, 2011; Marín and Maya, 2013), identification of employee and organisation (Dutton, *et al*., 1994), identification between alumni and alma mater (Mael & Ashforth, 1992), and identification with physicians (Dukerich, *et al*., 2002). Furthermore, the theory is also utilized in studies to observe the identification of an individual with for-profit organisations (Kuenzel & Vaux Halliday, 2008) as well as non-profit organisations (Bhattacharya, Rao, & Glynn, 1995). In addition to that, some researchers applied the social identity theory to observe the customer identification with corporate brands and product brands (Kim, Han and Park, 2001; Kuenzel and Vaux Halliday, 2008; Currás-Pérez, *et al*., 2009).

A fundamental component of the social identity theory is the theory of self-categorization which is also invented and further advanced by Turner and his some other collaborators (Tajfel & Turner, 1985; Turner, 1985; Turner, Hogg, Oakes, Reicher, & Wetherell, 1987). With its association to self-concept, the

essential idea of the self-categorization theory is that a person not only acquires a personal identity but also a social identity (Tajfel & Turner, 1985). Personal identity differs from social identity as it is defined as a group of both personality traits and characteristics of oneself to differentiate themselves from other individuals. By contrast, social identity is at the group level referring to an associated group that an individual relates oneself such as religious, educational, community or another sort of groups (Tajfel & Turner, 1985). To briefly expand the self-categorization theory; it suggests that an individual is not restricted regarding the number of categorizations oneself to a group. Hence, one could carry numerous group memberships by identifying themselves with many groups, which might result in those individuals acquiring multiple group identities. If we take a male person as an example; he could classify himself as a male (regarding his gender group), an employee of an organisation (regarding his profession), a fan of a sport organisation or an institution (regarding his interest group), a student (regarding his educational establishment) or an American (regarding his nationality) (Mael & Ashforth, 1992; Turner, 1985; Turner *et al*., 1987).

Whereas both social identity theory and self-categorization theory have been applied by various scholars in regard to interpretation of customer identification with a company or a brand (Bhattacharya and Sen, 2003; Kuenzel and Vaux Halliday, 2008; Currás-Pérez, *et al*., 2009; Homburg, Wieseke and Hoyer, 2009; Aspara and Tikkanen, 2011; Marín and Maya, 2013), this research likewise adapts both theories to understand the relations between notions of customers, social identities, experience and identification by scrutinizing London traditional black cab as a case study since this study is not only observing the utilitarian sides of it but also its role identities and relevant perceptions in the mind of customers.

2.2.3 Symbolic Interactionism

At this stage, it is useful to mention symbolic interactionism since corporate design heritage could be more comprehendible in respect with this theory. Symbolic interaction theory examines society via observing the subjective meanings that are given by people to objects, behaviours or events. “Modern

interpretations of symbolic interactionism are derived mainly from the works of George Herbert Mead. In addition, the historical underpinnings of symbolic interactionism can be found in Charles Horton Cooley's theory of society, John Dewey's concept of habit, and W.I. Thomas' definition of the situation (Leigh and Gabel, 1992, p. 28).” In the same article Leigh and Gabel contests: “Individuals are assumed to relate to objects or events based on their symbolic meaning given by society. It is a well-known fact that consumers may buy a given product for reasons other than the product's basic functional performance. People are often motivated to buy a good or service based on what it represents to themselves, and to others with whom they associate or to some societal referent.” (Leigh and Gabel, 1992, p. 27).

Nevertheless, in the former article symbolic interactionism is observed only at product level focusing on customers themselves, this theory could be applied to corporate marketing realm and different stakeholder groups. Due to the fact that the main concern of the study is not drivers of London Taxi Company but other stakeholder group customers (locals and visitors) using black cabs which acquires corporate design heritage while representing other social identities (the city of London, and British nation) to the users. Iconic London Taxi might mean a vehicle that makes taxi drivers earn their life. On the other hand, it is contested that London Taxi vehicle is seen by many customers not only as transportation service but also a living heritage. This study is going to deal with the customers as the stakeholders. For these reasons, the present study aims to find how corporate design heritage as part of service offerings besides symbolising a city and a nation, affect customer’ attitudes towards traditional London cab.

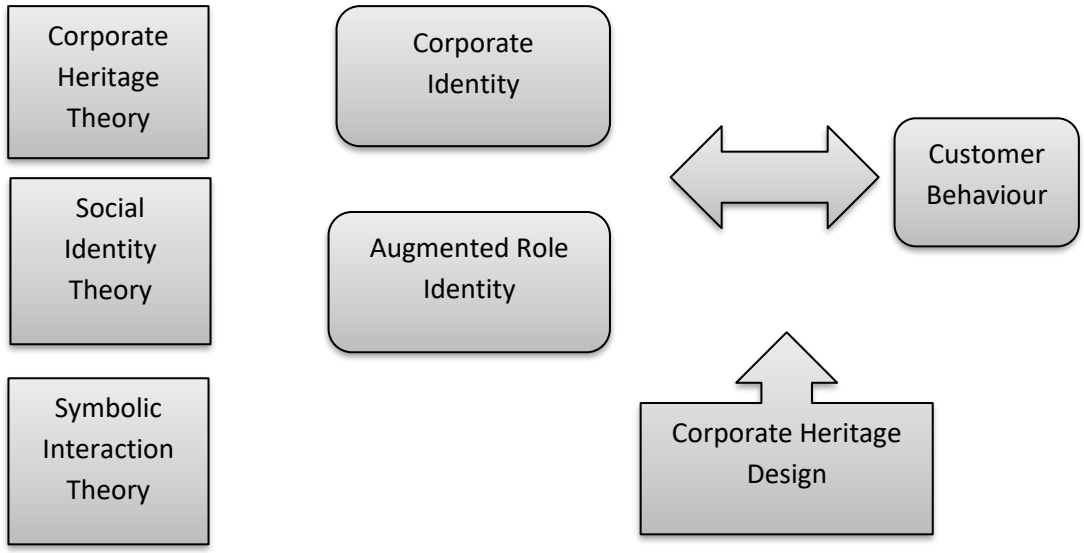

Figure 2.1: Theoretical Framework of the Research

2.3. Corporate Identity

In early corporate identity works, some practitioners as well as academic researchers linked corporate identity with only visual elements (Abratt, 1989; Bernstein, 1984; Feldman, 1969; Olins, 1978; Selame & Selame, 1975). Accountability of practitioners against clients might force them to exhibit tangible solutions with regard to corporate identity. Moreover, corporate identity used to seem as visual cues that assist audience to identify the organisations among others. Hence it could be one of the reasons that the term corporate identity was restrained with visual elements such as logo, name, design, etc. by practitioners and consultants (Margulies, 1970; Olins, 1978). For instance; in his book The Corporate Personality, well-known corporate identity consultant Wally Olins mainly focuses on visual elements as a means of corporate identity is manifestation (Olins, 1978). On the other hand, further studies contested that even visual and design elements are very significant tools for corporate marketing

objectives, they are not enough themselves to explain corporate identity of an organisation. In other words visual/design identity is distinctive from corporate identity and forms one layer of the corporate identity (Baker & Balmer, 1997; Balmer, 1995; He & Balmer, 2007; Melewar & Karaosmanoglu, 2006; Cees B.M. van Riel & Balmer, 1997). Aforementioned studies focusing on visual elements have defined corporate identity as:

"The corporate identity . . . is the firm's visual statement to the world of who and what the company is—of how the company views itself. . ." (Selame & Selame, 1975, p. 4)

> ". . . Corporate identity is about appearance . . ." (Olins 1978, p.9)
>
> "...is the sum of the visual cues by which the public recognises the company and differentiates it from others". (Bernstein 1984, p. 156).
>
> "Corporate identity is an assembly of visual cues—physical and behavioural by which an audience can recognise the company and distinguish it from others and which can be used to represent or symbolise the company." (Abratt, 1989, p. 68)

On the other hand, the more researchers observed corporate identity notion, the more definitions have emerged to assist comprehending corporate identity. Unlike the previous definitions and understandings, the researchers recognize the visual elements and design without disregarding its significance as only one facet of corporate identity. An example of this could be seen in Markwick and Fill (1997) article as they use an individual identity that differentiates one another. On the other hand, they claim that visual cues such as hairstyle or clothes are not enough to completely understand individuals. Hence, a considerable amount of following studies shed more light on corporate identity regarding corporate traits rather than only visual elements. To illuminate this difference the following definitions are presented below:

> "Corporate identity is the projection of a clear idea about what the company is and what it aims to be… (It) consists of a mix of four ingredients: personality, behaviour, symbolism (logo, design, etc.) and communications." (C.B.M. van Riel, 1992, p. 163)

> "… the explicit management of all the ways in which the organisation present itself through experiences and perceptions to all its audiences" (Wolff Olins (Firm), 1995, p. 17)

"..the set of meanings by which an object allows itself to be known and through which it allows people to describe, remember and relate to it" (van Rekom, 1997, p. 411)

In their study van Riel and Balmer (1997), the definition of corporate identity from Strathclyde Statement is "… the way in which an organisation's identity is revealed through behaviour, communications, as well as through symbolism to internal and external audiences" and " …(it) refers to an organisation's unique characteristics which are rooted in the behaviour of the members of the organisation" (p. 341).

Another brief definition of corporate identity is "The mix of elements which gives organisations their distinctiveness: the foundation of business identities" (Balmer, 2001; p. 254).

As the corporate identity notion became more noticeable to marketing and organisational scholars as well as practitioners like managers, consultants for companies; substantial studies have emerged to discern the concept. Thus, either newly emerged researches in terms of corporate identity itself (Balmer & Soenen, 1999; Balmer & Wilson, 1998; He & Balmer, 2007; Melewar & Karaosmanoglu, 2006; van Rekom, 1997) or the researches underpinning the relation between corporate identity and the existing corporate-related concepts (Balmer, 2008; Balmer & Greyser, 2006; Christensen & Askegaard, 2001; Gray & Balmer, 1998; Schmitt, Simonson, & Marcus, 1995) added into corporate identity studies to contemplate the phenomena from different point of views.

Although the substantial amount of studies increased and the saliency of corporate identity has been suggested by different authors, the amount of study brought digressiveness and the complexity regarding corporate identity notion for new researchers and practitioners alike. At this point, a simple pragmatic framework; the AC^2ID test **Table 2.1**, which is reshaped based on original ACID test (Balmer & Soenen, 1999), was suggested by Balmer and Greyser (2002). On further corporate identity studies, the theory lying behind this framework was explained by scholars as identity-based views of the firm, simply refers that companies have multiple identities (Balmer 2008, pp. 893-894). The suggested framework explains the five different sorts of identities which are respectively; Actual Corporate Identity, Communicated Corporate Identity, Conceived Corporate Identity, Ideal Corporate Identity and Desired Corporate Identity.

Table 2.1: AC^2ID TEST, Definitions of Identity Types (Balmer and Greyser, 2002)

Identity Type	Definition
Actual Identity	It constitutes the current attributes of the corporation. It is shaped by a number of elements, including corporate ownership, the leadership style of management, organizational structure, business activities and markets covered, the range and quality of products and services offered, and overall business performance. Also encompassed is the set of values held by management and employees.
Communicated Identity	It is most clearly revealed through "controllable" corporate communication. This typically encompasses advertising, sponsorship, and public relations. In addition, it derives from "non-controllable" communication, e.g., word-of-mouth, media commentary, and the like.
Conceived Identity	It refers to perceptual concepts —corporate image, corporate reputation, and corporate branding. These are the perceptions of the company—it's the multi-attribute and overall corporate image and corporate reputation—held by relevant stakeholders. Management must make a judgment as to which groups' perceptions are most important.
	It is the optimum positioning of the organization in its market (or markets) in a given time frame. This is normally based on

Ideal Identity	current knowledge from the strategic planners and others about the organization's capabilities and prospects in the context of the general business and competitive environment. The specifics of a given entity's ideal identity are subject to fluctuation based on external factors—e.g., the nuclear power industry after Chernobyl; and industries (such as travel, transport equipment, and security systems) affected negatively and positively by the September 11 World Trade Center catastrophe.
Desired Identity	The desired identity lives in the hearts and minds of corporate leaders; it is their vision for the organization. Although this identity type is often misguidedly assumed to be virtually identical to the ideal identity, they typically come from different sources. Whereas the ideal identity normally emerges after a period of research and analysis, the desired identity may have more to do with a vision informed by a CEO's personality and ego than with a rational assessment of the organization's actual identity in a particular time frame.

The framework is later applied to Corporate Brands and modified by adding two more identity types consecutively; Covenanted corporate brand identity (i.e. brand promise) and Cultural corporate brand identity (i.e. organisational culture and employee identification) (Balmer 2012). Based on the corporate identity literature the following section explores the dimensions of corporate identity.

2.3.1 Corporate Identity Quality Trait

The quality trait of corporate identity is vital to all companies. While Oxford dictionary defines quality as follow: “The standard of something as measured against other things of a similar kind; the degree of excellence of something.”, The Cambridge dictionary briefly describes it as “a high standard.”

Corporate identity could be shaped many factors including quality of products and services. Some scholars observing corporate identity suggested that the quality character should be in the basic definition of corporate identity as". . . identity in its most basic sense; that is the fundamental style, quality, character

and personality of an organisation, those forces which define, motivate and embody it" (Downey, 1986 p.7). It is suggested that product, service or brand quality, which relates to main activities of the firm to deliver the brand promise, is among the corporate identity traits that construct the whole corporate identity (Balmer, 2017).

The unique corporate identity is confined in different dimensions such as quality, market position and culture (Balmer, 2008). Quality of Service and Products is also an important dimension of for company administrative at the organisational level (Balmer and Greyser, 2006). It is also claimed that organisations who are perceived as reliable via products, services and other extensions have the advantage to differentiate themselves among others. Hence reliability as part of quality attributes of perceived corporate identity is an important element for corporations (Ingenhoff and Fuhrer, 2010).

Corporations that provide high-quality product and services in return could have the benefit of positive response from customers in the reputation building process (Cravens *et al*., 2003). Some scholars demonstrate the importance of quality by presenting examples of famous companies from different industries. For instance, the automobile brand Volvo has a positive reputation in terms of the quality of its cars (Balmer and Greyser, 2002). Another notable example of quality as part of distinguishing characters which differs a well-known fast-food chain corporation from its rivals is also accepted by Simpson (1988) besides cleanliness, value and service.

On the other hand, some scholars claimed that corporate identity components should signal the quality (Shee and Abratt 1989 p.68) since the quality of service and products is a significant cue that effects the current reflection of organisations within the minds of customers and other stakeholders (Abratt and Kleyn, 2012). Although an organisation could exploit various ways as part of a total corporate communication program, product and service quality is one of the primary communication vehicles of a corporation (Balmer, 2017). Similarly, Kiriakidou and Millward (1999) argued that the quality of service and products is one of the important corporate values that play an important role in the reflection of

corporate identity. At this point, visual identity could be one of the tools to convey the quality characteristics of a corporation. It is argued that companies could convey its quality traits not only by product or services but also with its visual identity, as part of corporate identity, such as design elements (Melewar and Saunders, 1999). On parallel Schmitt and Marcus (1995) adds that quality could also contribute the corporate identity by capturing consistency in not only product or services, but also aesthetic elements related to the organisation.

It is quite noticeable that scholars place importance on reliability, consistency and superiority comparing rivals as a cue of quality. Whereas stakeholder groups do not have the same perception of the organisation, quality and reliability are some of the main concerns of customers to create a perception of a corporation as in the past the Automobile company Jaguar has a negative perception in regard to reliability and quality (Gray and Balmer, 1998).

Organisations should achieve the consistency in quality of their products, services and within the organisation to build decent corporate identity (De Chernatony, 1999). The perception of quality and reliability related to service or products might be a result of previous achievements of the corporation in supplying high quality and reliability products or services. Whereas consumer's comprehension of quality might differ, the consistency plays a vital role to obtain high-quality perception among consumers (Rowden, 2017).

According to Marvick and Fill (1997) quality, is one of the most differentiating elements of a corporate identity, could signal the superiority compared to the other rivals within the minds of customers. Quality could be a superiority advantage on the rivals like Daimler Benz is another example that is widely appreciated by its high-quality products and has a positive perception among its customers' mind (Gray and Balmer, 1998).

Although there are various factors that affect the choice of customers on any service or products, perception of quality becomes important for the customers who are rational in their choices (David *et al.,* 2005). It is also suggested that if an organisation or manufacturer has low-quality products or services, it will have a negative impact on the perception of both external stakeholders such as

customers and internal stakeholders such as employees (Moingeon and Ramanantsoa, 1997). Whereas the perceived quality of product or services is significant for the companies, consumers might also use it as part of corporate identity besides company values or social identity traits to express or define themselves (McAlexander *et al.,* 2002).

Scholars adopting a customer-based approach also draw attention to perceived quality as part of corporate brand equity to scrutinize the phenomena from the customer point of view. Aaker (1996) suggested that the quality element could have an important impact on the overall perception of a corporation among customers. Perception of quality in customers mind is defined as "the consumer's subjective judgment about a product's overall excellence or superiority" by Zeithaml (1988 p. 3). He argues that if the perceived quality high customers would prefer high-quality product or services rather than other competitors. Perceived quality has been listed one of the main dimensions of customer-based brand equity within the customer-based studies (Keller 2001, Yoo *et al*., 2000; Pappu *et al*., 2005; Netemeyer *et al*., 2004; Low and Lamb, 2000).

2.3.2 Corporate Identity Country of Origin Trait:

Before delving into the studies in regard to country of origin trait of a corporation, it is believed that to start with basic definitions would be beneficial. The subject of origin is defined by various dictionaries can be listed as follows: "Where an object was made by Cambridge", "The point or place where something begins, arises, or is derived by Oxford", and lastly "The country from which a commodity or product originates by Collins".

Dowling suggests that the origin of an organisation has an important impact on customers' perception of corporate identity (Dowling 1993). It is suggested that country of origin is not only seen as part of perceived corporate identity and but also a vehicle to communicate the identity of an organisation (Melewar, 2003). In relation to corporate identity, the image of a country of origin is defined as "the picture, the reputation, and the stereotype that consumers attach to products of a specific country" (Piron, 2000 p. 30).

Avison lists the common perception of different country of origin as they could be benefited by the organisations (1997). He claims that 'Germanness can mean great engineering, and perhaps this is the reason for AEG to be using the slogan in its advertisements: "Advanced Engineering from Germany". He adds that "Made in Japan" resonates as innovative and high-tech products and this is the reason why Dixon prefers to use "Matsui" which sounds like Japanese for (Avison, 1997, p. 35). An extraordinary example on the country of origin is Cathay Pacific, from Hon Kong, and its efforts to link its origin to more Asian side rather than British/Asian with colonial associations after changing the political environment to develop its ability in the marketplace (Balmer and Greyser, 2002).

It is stated that country of origin provides cues to customers in order to create associations in their mind (Keller, 1993). On parallel corporate identity, studies accept the importance of country of origin and concluding that it is one of the factors that affect customers' perception towards an organisation (Balmer, 1998). Additionally, customers might perceive country of origin as a cue to evaluate the quality of a product (Chao, 1998). The empirical study conducted by Kaynak and Cavuslugil (1983) supports the idea of customer assessment on quality based on the perception of the county of origin. Another empirical study supports the claim of vehicles made in Britain has a positive response from British customers, which is an example of a country of origin impact on customer behaviour and perception (Balabanis and Diamantopoulos, 2004, Mohd Yasin *et al*., 2007).

Although the country of origin could be perceived as a signal to quality, customers might show different behaviour in their preferences. The study conducted by Elliott and Cameron (1994) clearly demonstrates that as Australian customers prefer to buy Australian cars even though they think British cars obtain high quality. The writers suggest that the reasons behind this behaviour could be availability or national identity-related emotions. It is also suggested that not only nationality but also familiarity with the country of a specific product has an impact of country of origin evaluations among customers (Ahmed and d'Astous, 2008).

Whereas country of origin could be a cue to impact the perception of customers, the size of the impact could change in different product categories (Balabanis and

Diamantopoulos, 2004; Watson and Wright, 2000, Cordell, 1992). In addition to that certain attributes of product could also affect the extent of the country of origin effect (Juric and Worsley, 1998, Supphellen and Rittenburgh, 2001, Chryssochoidis *et al*.,).

2.3.3 Corporate Identity History Trait:

The history concept has been observed by several corporate marketing scholars (Moingeon and Ramanantsoa, 1997; Balmer, 1998; Abratt and Kleyn 2012; Balmer, 2017). There are several dictionary definitions of the word History. Collins dictionary defines history as "a record or account, often chronological in approach, of past events, developments, and that is preserved or remembered of the past, especially in written form. On the other hand, it is defined as: "something that has been done or experienced by a particular person or thing repeatedly over a long period" by Cambridge dictionary. As a last definition according to Oxford dictionary history is: "A continuous, typically chronological, record of important or public events or of a particular trend or institution."

While the term history has several definitions, corporate marketing scholars agree on the importance of history and its relationship with corporate identity. In one of the early corporate identity studies; to answer the question of "what an organisation is", Balmer (1998) includes history besides strategy, philosophy, products or services as well as the way of communication whether formal or informal. It is suggested that history has a strong connection with the identity concept since identity is a result of the history of the organisation (Moingen and Ramanantsoa, 1997).

Another qualitative study informed by the practitioners' point of view supports the importance of history and the mutual relation between corporate identity and history (Melewar and Karaosmanoglu, 2006). History is also used to define the major elements that constitute corporate identity. While explaining corporate identity, Balmer lists history as one of the several elements that construct the corporate identity (Balmer 2001). Besides other layers such as organisation

structure and ownership, history is also significant in building corporate characteristics (Balmer and Greyser, 2006).

Corporate history and culture could present a platform for customers to interact with companies (Schroeder, 2009). Hence, history could be a significant engagement tool that might be preserved not only by the organisations but also by brand communities (Abratt, and Kleyn, 2012) as some companies with their stories and core activities such as newspapers could create collective history for the society and consumers (Cayla and Eckhardt, 2008).

It is suggested that companies should deem to look at themselves from Omni-temporal point of view which means, past (history and roots), present, and future might be important for key stakeholder groups (Balmer, 2017). In addition to that besides its significance to the corporate identity, Omni-temporality is utilizing history and heritage for organisations requires a small amount of effort because the past affects everyday life (Zhiyan *et al*., 2013, p.28).

Another reason history being vital for the companies is; the judgements of customers towards brands or companies are moulded by the accumulation of customer experiences (Aaker, 1991). Companies should place importance in history to utilize their brand heritage as Urde *et al*., (2007, p. 4) defines brand heritage as " a dimension of a brand's identity found in its track record, longevity, core values, use of symbols and particularly in the organisational belief that its history is important."

As a consequence, over a period of time, brand heritage creates associations linked to the brand (Aaker, 2004) which could improve the brand equity and brand personality (Keller and Richey, 2006). The perception of acquiring a rich history in the mind of customers might be the result of consistent positive company image (Netemeyer *et al*., 2004). In addition, brand heritage could lead to higher brand attachment among customers (Merchant and Rose, 2013). To utilize history and heritage some companies prefer to use their real history and heritage (Beverland and Luxton, 2005) some prefer to modify or create fiction based heritage (Beverland, *et al*., 2008; Holak *et al*., 2008) since the reinterpretation of the brand's history and origin could provide differentiation and sincerity (Aaker,

2004). The link between history and heritage is also palpable in terms of assessment of history. Some studies used heritage to measure the notion of history from the customer perspective (Lehman *et al.,* 2008).

2.3.4 Corporate Identity Positioning Trait:

Although Oxford Dictionary defines positioning as; "the state of being placed where one has an advantage over one's rivals or competitors.", Businessdictionary definition of Market Positioning is "An effort to influence consumer perception of a brand or product relative to the perception of competing brands or products. Its objective is to occupy a clear, unique, and advantageous position in the consumer's mind". In their study, Balmer and Greyser (2006 p. 736) briefly define Positioning "The organisation's position relative to its competitors (size, geographical coverage, product and service range)". In a broader definition called as identity positioning as "…whether there are inconsistencies between what the organisation makes, does and behaves and how the organisation positions itself to other organisations and in the minds of key stakeholder groups". (Balmer, 1998 p. 982).

Another brief description of positioning, by Golnick (1985), is a term that is used by the company to find out both business identity and the type of business or company desires to follow. Other scholars also claim that positioning in a marketplace, that differentiates itself from rivals as a corporate strategy, is part of corporate identity traits and it could be different based on the organisational structure (Melewar, 2003).

Market position is one of the elements in which corporate identity traits are confined (Balmer, 2008). The positioning of a company is suggested to be a process in which company in an attempt to distinguish itself from rivals seek to have a clear position which is informed by the perception of itself (Schmidt, 1995). In a similar way, his study regarding corporate identity Balmer listed the market position as one of the key corporate identity features differentiating a company from its rivals in a meaningful and favourable way (Balmer, 2017). Some scholars hold the view that positioning supports to describe one of the many types of

corporate identities and could be used as a signal on how a corporation perceived by customers (Balmer 2001). In addition to that different positioning strategies could yield different effects regarding the customer point of view (Fuchs and Diamantopoulos, 2010).

Early corporate identity-related communications regarding industry are mainly composed of the visual identity programs and symbolism to convey the direction of the intended positioning of corporations (Marwick, 1997). Company slogans, advertisement campaigns, mission statements besides other tools could be used to communicate the positioning of a corporation as British Airways' used the 'The World's Favourite Airline' for a global advertising campaign with the intention of different positioning after it was privatised (Grey and Balmer, 1998). It is suggested that brands with a history could choose to position themselves based on their continuous heritage values (Urde *et al*., 2007).

Since there could be many changes in the marketplace, environment or other elements in regard to business, and company managers might consider repositioning the organisation to achieve their objectives (Balmer 2017). Positioning strategy of a firm could be connected with its origins or associations to a country. For instance, an old Hon Kong airline company Cathay Pacific used positioning strategy to link itself from British/Asian to Asian after the political changes in Hon Kong to increase its abilities in the marketplace (Balmer and Greyser, 2002).

2.4. Heritage and Corporate Heritage

If we need to define heritage in the simplest way, we could use the dictionary definition of heritage which is to inherit. On the contrary, in his study David Harvey asserts that the definition of heritage is left broad and flexible by many researchers due to the fact almost each heritage practitioner has own definition of heritage (Harvey, 2001).

In a parallel way, the extent of heritage stated by individuals or organisations such as UNESCO has been changed throughout the years. A part of preservation heritage activities, at the beginning UNESCO started with tangible heritage (ancient ruins, buildings, pyramids) adding natural heritages (Amazon forests, Red Sea), then intangible heritages (a masterpiece of culture and masters) (Kirshenblatt-Gimblett, 2004).

Different types of heritages mentioned above are evaluated on an individual, national, regional, community-level by scholars from disciplines like sociology, history and so on. On the other hand, recent studies done by corporate marketing scholars demonstrate that heritage could be decisive at the institutional level, which led a new heritage concept called corporate heritage examining corporate heritage identities and corporate heritage brands (Balmer, 2013). He adds that heritage is not a part of history, but it is related to past, present and the future, that makes institutional heritage to expose "change, transformation and reinterpretation".

Corporate organisations should differentiate their selves to attract the attention of stakeholders as they need to preserve their performance, including non-profit organisations to achieve their objectives. One of the sources could be corporate heritage identity if we look through identity-based sources of the firm (Balmer, 2008). Corporate heritage has been drawn the attention of corporate marketing researchers for being an impactful resource regarding resource-based organisation theory. Firms can benefit from corporate heritage as a marketing resource which may increase organisational capability by honouring meaningful differentiation to corporate heritage identities having links with the stakeholder of organisations (Burghausen and Balmer, 2014a).

2.4.1 Corporate Heritage identity and Corporate Heritage Brands

Corporate identity defined as unique corporate traits that distinguish organisation among others and answer the questions of "what are we?" and "who are we?" (Balmer, 1998). On the other hand, underpinned by Omni temporality and stability across multiple generations, corporate heritage identity refers to a

unique category of organisation which obtains continuous certain identity traits having multiple layers in respect to time and can meaningfully link its past, present and prospective future (Burghausen and Balmer 2014a, Balmer, 2011).

The power of corporate heritage identities comes from the fact that they have the potential of being a component for social collective memory. In addition, corporate identities meet certain stakeholders' needs by means of capturing and handing over an identity (Balmer, 2011).

On the contrary, the concept of corporate heritage brand is different from corporate heritage identity since corporate heritage brands represent an enduring invisible agreement with stakeholders and corporate heritage identity is the main component for corporate heritage brands (Balmer, 2013; Burghausen and Balmer, 2014a). Corporate heritage brands acquire enduring promises peculiar to past, present and future. Corporate heritage identities contain particular institutional identity traits in connection with the past, present, and future (Balmer, 2011).

Both corporate identities and corporate brands can be valuable, salient and attractive to stakeholders since they represent stability, continuity, and persistent identity tested by time (Balmer, 2013).

The effect of corporate heritage has been studied by many scholars. One study show that corporate heritage has positive effects on the perception of corporate social responsibility when it is used in corporate communication program (Blombäck and Scandelius, 2013).

Monarchies attract some corporate marketing scholars as a corporate brand with heritage. The chronical history of British Monarchy is subject to a corporate heritage unveiling the prominence of protecting corporate heritage brands to remain the essential for its stakeholders (Balmer, 2009).

The notion of heritage brand or corporate heritage brand first appear in the study of Monarchies as Corporate brands (Balmer *et al.,* 2006). Then the notion of corporate brands with heritage is observed in a detailed way (Urde *et al.*, 2007). On the other hand, some researchers scrutinise the significance of the intertwined history of both family and business history as a brand heritage resource to be used

for communication purposes (Blombäck and Brunninge, 2013). On the contrary, some empirical studies propose the antecedents and outcomes of brand heritage among customers (Wiedmann *et al.*, 2011a; Wiedman *et al.*, 2011b).

In spite the fact that corporate brand heritage has not been empirically supported enough so far, some empirical studies prove that corporate heritage should be considered by managers as part of repository for marketing strategies and competitive advantages. The study on Cunard by Hudson demonstrates how decision-makers could exploit their corporate history by making it relevant to date as part of a repositioning strategy (Hudson, 2011).

Although corporate heritage studies mainly focus on the assets of the organisation itself, it is claimed that events and traditions occurring outside of organisation could also be adopted as social memory assets and resources for competitive advantages (Hakala *et al*., 2011).

As it has been stated many studies, managers have the responsibility to protect and use corporate heritage as a strategic resource. Empirical research on British Oldest Company Shepherd Neame proposes the management mindset that is formed by awareness dimensions for corporate heritage identity stewardship (Burghausen and Balmer, 2015).

Although corporate heritage brand management has been studied, new studies with different approaches reveal new classifications for management of corporate heritage. A recent study compares both corporate heritage brands and contemporary corporate brands to understand the differences in management strategies for each and proposes a corporate heritage management model (Cooper *et al*., 2015).

Corporate heritage is a latent area that could be applied to different sectors such as the financial industry. A study on financial sector demonstrates that corporate history could be transformed into corporate heritage via architecture as the spatial and material manifestation of the institutional past (Bargenda, 2015).

Another corporate heritage brand study claims that long-established corporate brands have the potential to recover brand after a structural brand crisis if corporate heritage is revitalized (Cooper *et al*., 2015).

2.4.1.1 Six Precepts of Corporate Heritage

There are six different dimensions an organisation has to attain to mention a true corporate heritage (Balmer, 2013). Those are respectively;

Omni temporality: Simply staying meaningful in past, present and future.

Institution trait constancy: This criterion is composed by eleven dimensions which are; ownership, organisational type, organisational rationales/ cultures/ ethos, product and service focus, manufacturing process and delivery of services, quality levels, location, group and class associations, design and style, sensory utilization, corporate communications. Corporate heritage institutions should have at least one, preferably two or more of these meaningful and consistent traits

External /internal tri-generational hereditary: It is expected from corporate organisations to inherit its either internal or external legacy through at least three generations for about 50 years.

Augmented role identities: Corporate heritage identities are filled by many role identities such as temporal, territorial, social, cultural and ancestral as additional identities which polish institutional identity.

Ceaseless multigenerational stakeholder utility: The ability to meet needs and wants of stakeholders across generations.

Unremitting management tenacity: The perseverance of management to protect corporate heritage.

These six criteria of corporate heritage are divided into two groups as corporate heritage criteria and corporate heritage management imperatives. Corporate heritage criteria are constructed by four precepts as; Omni-temporality, institutional trait consistency, tri-generational hereditary and augmented role identities. The two precepts regarding management side of an organisation are

ceaseless multigenerational stakeholder utility and unremitting management tenacity.

2.5. Augmented Role Identities:

The relation between certain corporations and other identities was stated earlier by corporate marketing scholars as part of answering the question of "what are we?" (Balmer, 1998). It is suggested that some corporate brands especially heritage brands are usually bonded with culture or places over a period (Balmer and Chen, 2015).

The association between a corporation and other entities such as place and people could be result of by customers' judgements as they could attempt to link them in their minds (Keller, 1993). The augmented role identity; the association of corporate identity with a long history and any other type of identity such as social or place identity, could have a reflection on consumer satisfaction. In their article, as the first of its kind within corporate heritage realm to observe the relation between role identities and consumer behaviour, Balmer and Chen found a positive relation between famous Chinese heritage brand Tong Ren Tang's imperial role identity and consumer satisfaction (2017).

Sometimes these associated brands, products or organisations could be used to express the bonded identity. For instance; the Olympic Games could be utilized to express or build national identity by using symbols that represent the nation. China, in 2008 The Beijing Olympics Opening Ceremony, used important cultural symbols and inventions to demonstrate Chinese national identity (Zhiyan *et al*., 2013 p. 92). Although those symbols could be generic such as inventions or flag, some of the organisations and their products could also be utilized as a symbol of a nation. A notable example of this the usage of traditional London taxis during 2012 The London Olympics Opening ceremony. The study by Moncrieffe, and Moncrieffe, (2019) also reveals that London black cab image is used as representative of British values and British identity among primary school students.

In his corporate heritage study Balmer contests that "some heritage institutions are meaningful in territorial (associations with a city, region or country), cultural (the values of a nation, region or city or of a class, profession, etc.) and ancestral (the familial dimension in terms of multi-generational ownership of a firm and multi-generational loyalty to a company as customers, suppliers, investors, etc.) and, absolutely critically, in institutional terms (what a company makes, stands for, etc.)."(Balmer, 2013, p. 297).

Augmented role identity is defined as additional identity, in connection with place, group, and society etc., and it is attributed to an organisation while polishing an entity's institutional and temporal properties (Balmer, 2011; 2013). British Broadcasting Corporation is an example of an institution with multiple role identities since it does not have only a distinctive corporate identity but also over a period, it is now associated with territorial role identity of Great Britain as well as British culture (Balmer, 2013). Some empirical studies unveil these kinds of linkages between institutional identity and various identities. At this point, it is better to understand that each corporate institution may have prominent association with different type of role identities such as Chinese culture and Royal association of Chinese medicine company Tong Ren Tang (Balmer and Chen, 2015), or association with Shephard Neame brewery company and regional identity of Kent and Britain brewery heritage (Burghausen and Balmer, 2014a).

Heritage assets could also be linked to certain cultures and become a symbol of that culture, which adds them distinctive characteristics. A case study in the banking sector explains that architectural design elements could be associated with French culture and symbolize the culture over time (Bargenda, 2015).

2.5.1 City Role Identity of London Taxi:

2.5.1.1 Functional Role Identity:

Cities as like the brands have been trying to find different ways to differentiate themselves among the competitors. These efforts keen to increase the economic

and social improvements of cities. Successful brands provide a platform for people to meet the consumer's physical and psychological needs via their functional and symbolic attributes (Hankinson and Cowking, 1993). Therefore, like brands cities also need to address those functional, symbolic and emotional needs (Rainisto, 2003). Cities need to consider all stakeholders while planning to create or improve their identity.

Karavatsiz theoretical framework on city branding adopts a corporate level point of view and aims to make improvement on all stakeholders including investors, visitors and residents (Kavaratzis, 2004). He suggests that infrastructure and transportation is an important part of city identity. Other scholars have also reached to an agreement the significance of transportation and its relationship with city identity (Anholt, 2006; Evans, 2003; Merrilees, *et al.,* 2013; Parkerson and Saunders, 2005). Transportation is accepted as one of the basic qualities of city branding efforts (Anholt, 2006). Some claims that transportation is a tangible element of city branding (Parkenson and Saunders, 2005). On the other hand, it is suggested that to create favourability vis a vis city identity requires investment in transportation and infrastructure (Evans, 2003).

Poor transportation as part of city identity and communication could negatively affect the city identity. In their study, De Carlo (*et al.,* 2009) found that weak transportation is one of the main factors that impact the perception of city identity regarding Milan even it is accepted as a fashionable and energetic city. In their study, Tompsin and Schofield revealed that there is a strong link between public transport performance and overall visitor satisfaction (2007).

There are various elements that construct the quality of public transportation, which has an impact on the satisfaction of public transport users. The main antecedents of public transport perceived quality as follows, comfort, vehicle safety, cleanliness, accessibility and punctuality (Stuart, *et al.,* 2000; Golob, 2003; Eboli and Mazulla, 2011, de Oña *et al.,* 2013; Borgaday *et al.,* 2014). Traditional London taxis have an important place within the London Transportation system (Skok, 2000). With their safety standards and many other qualities help London taxis to perform a functional role in London.

Another common concern within the cities about transportation modes is the friendliness of the vehicle for the disabled people who require using a wheelchair to travel around the city. At this point, London taxis offer a good solution by providing continuous elements of high roof for decades which was regulated long ago for a gentleman wearing a top hat while seated (Greenglass, 2015). This tradition-based feature with the ramp sliding in an out makes London Taxis wheelchair friendly and let wheelchair users have easy access to the cabs.

2.5.1.2 Symbolic Role Identity:

There are various types of iconic symbols representing cities to others because of their discursive nature. Although some contests that iconic symbols are only well-known people representing cities (Nas, 2016), subjects such as transportation vehicles could also be icons for cities by becoming an inseparable part of it (Ethington and Schwartz, 2006; Castillo-Villar, 2016; Monnet, 2006, Favro, 2006). The relation between city identity and the black cabs has been accepted by many. Joe Kerr from the Royal College of Art (RCA) emphasizes that the black cab is still as much a symbol of London as it is a vehicle besides part of London landscape like red busses by stating; "It is utterly recognisable. It's like a British telephone box. You cannot separate a black cab from people's identity of London." (Jackson, 2005). To express the strong relationship between the city identity of London and traditional London taxis Bobbit states that: “Traditionally black, frequently red. Sometimes blue, green or multi-coloured, it is as much as part of London as Big Ben, Piccadilly Circus, Tower Bridge and Trafalgar Square. Uniquely British- but as familiar to the capital’s millions of visitors as it is to Londoners- without it the City would be all the poorer. It is the London taxicab.” (Bobbit, 1998 cited in Skok, 2000, p. 225).

While there was a discussion of whether London Black Cabs should be replaced with other vehicles or not, a former conservative politician Richard Tracey called for a step from the related establishments to not replace London black cabs since along with red buses, black cabs are one of the most recognizable transport icons in the word (Tracey, 2015). In addition to that, he emphasizes the significance of

black cabs for Londoners by mentioning London Black cabs was chosen as the most iconic transport design in a poll conducted by Transport for London.

Another difference of London taxi as a dynamic icon of London is that it has the potential to adapt itself based on changing needs and strategy of city management in order to revive or add new meaning to city identity. Scholars observing city icons usually overlook this type of icons and limit the phenomena with static architectural icons such as Pyramids in Cairo, Eifel Tower in Paris, Colosseum in Rome, etc. Hence, they consider city icons not having the ability to adapt to the new strategies of improving city identity and might no longer represent the city (Trueman and Cornelius, 2006). Because of the increasing air pollution cities have been looking for new solutions to solve the problem. These types of solutions could give them an opportunity to link innovation and modern meaning with the city identity. In the city of London, administrators have been working to increase air quality and make city identity more environmentally friendly (Transport Emissions Roadmap, 2014). And the %21 of CO2 emission is because of road transportation (LAEI, 2010). Based on this strategy the newest London black cabs have become more environmentally friendly by adopting electrical motors while still preserving main heritage design characteristics.

2.5.1.3 Appeal Role Identity:

Another important part of city identity is related to its visual identity such as landscape. Kavaratzis suggests that landscape is one of the primary ways of communicating city identity (2004). He suggests that landscape strategies of city management include urban design, architecture, public space and heritage planning. Laws (1995), writing on the attractiveness of a tourist area, identified transport as one of the secondary destination features which contribute to the attractiveness of a destination.

Where an urban destination wishes to benefit from tourism, improved provision of touristic goods and services can strengthen competitive advantage (Suh and Gartner, 2004). Within this competitive market, demand for customer centred service delivery systems may be an important factor in influencing the use of local

transport services by passengers (Page, 1999). Vetter (1985), for example, in an early study of the attributes of urban destinations which render them attractive to visitors, listed the adequacy of the transport system as one of ten aspects of cities which are extremely important to tourists, claiming that the adequacy of a city's transport system contributes to its attractiveness and overall image. While London Taxis are part of the public transportation system, with their iconic heritage they create aesthetic value to London landscape and play an important role to make London distinctive.

2.5.2 National Role Identity of London Taxi:

Whereas the cultural and national identity is a prominent phenomenon, the communication of the given identity is at the very focal point of the study. In his book Englishness and National Culture, Antony Easthope asserts that among other group identities the concept of nation is the most powerful identity form, part of the culture, which could be expressed in symbols and icons. (Easthope, 2004). He claims that many institutional organisations and such as the British Broadcasting Corporation, the Royal Navy and Parliament manufactures and maintains the English national identity. The symbols and its pertinence with the identity are also asserted by other academic researchers. Watson suggests that "we all work on our identities all of the time: making meaning through a dialogue with the culture (or cultures, in so far as we are parts of several groups), its norms, values and symbols. Through our actions, we are contributing to culture as well as taking from it." (Watson, 2001 p. 21) In the same manner, in one of the renown British culture researcher Raymond Williams relates culture and its signification by defining culture as "a particular way of life which expresses certain meanings and values nor only in art and learning but also in institutions and ordinary behaviour"(Williams, 2001, p. 57) While literature, history, art, architecture and many other cultural related icons might be used to convey the given social identity, some brands with accorded role identities are also examples of icons that communicate national or cultural identity as a traditional London taxi is one of them. During the discussions of the black cab being possible ceased because of financial struggle, in her article journalist Cathy Newman elucidates the strong

relation between English, British identity and the traditional black cab as a British Icon by claiming "To the relief of Anglophiles, the British-as-tea-and-scones London black cab has been saved from extinction." (Newman, 2013).

Besides some assets such as literature, music history, some institutions could have strong associations with a certain culture over time (Balmer, 2011a, 2013). British Broadcasting Corporation is an example of an institution with multiple role identities since it does not have only a distinctive corporate identity but also over a period of time, it is now associated with British culture (Balmer, 2013). Some empirical studies have shown these kinds of associations between institutional identity and various identities. At this point, it is better to understand that each corporate institution may have a prominent association with a different type of role identities such as Chinese culture and Royal association of Chinese medicine company Tong Ren Tang (Balmer and Chen, 2015). Another study regarding financial sector demonstrates how French Bank become bonded with French culture and symbolize the culture over time (Bargenda, 2015).

Sometimes stakeholders identify with a certain institution or experience a certain culture associated with those institutions such as the USA or French citizens consuming British Culture through British Monarchy (Balmer, 2008). With its long heritage and various attractions for the visitors, London is one of the most visited cities in the world (Millington, 2017). Visitors might come to the London not only seeing the landmarks such as House of Parliament, Big Ben, Westminster Abbey and etc., but some of them could keen to experience the British culture through different experiences. London taxis as part of the daily life for the centuries could help them to achieve that. The official tourism website of Great Britain besides British Pubs, Saville Road tailoring shops, includes experiencing London taxi as part and how to hail one in with a British Manner (visitbritain.com, 2017). In a similar way Storry and Childs (2016 p.39) in their book "British Cultural Identities" defines traditional London black cab as one of the distinctive symbols for British Culture. On the other hand, it is suggested that there is not enough support to maintain the black cab, even though it is a cultural icon (Tracey, 2015). In his book Cocco (1999) also lists London black cab as a

British iconic benchmark while claiming open sports in UK are as much a British icon as Big Ben, Queen and London taxi.

In his corporate heritage study Balmer contests that "some heritage institutions are meaningful in territorial (associations with a city, region or country), cultural (the values of a nation, region or city or of a class, profession, etc.) and ancestral (the familial dimension in terms of multi-generational ownership of a firm and multi-generational loyalty to a company as customers, suppliers, investors, etc.) and, absolutely critically, in institutional terms (what a company makes, stands for, etc.)."(Balmer, 2013, p. 297).

Some scholars observe the relationship between institutions and certain territories. For instance; having many role identities, long-lasting institution British Broadcasting Corporation is now associated with territorial role identity of Great Britain (Balmer, 2013) like famous brewery company Shephard Neame and its link with the regional identity of Kent (Burghausen and Balmer, 2014a). Thanks to its efforts to preserve and respect its heritage after some years, famous American Motorbike Company Harley Davidson is also associated with the territorial identity and it has been sustainable over Japanese motorbike companies (Stanfield, 1992)

Utilizing car manufacturing to symbolize British Culture and Britishness is not a new notion for the British Motor industry. Although Raymond Levy criticizes British Car brands for lacking an international character (Loewy, 1942), it is claimed that British motor industry is aware of the situation but after war years they chose to highlight Britishness and maintain national identity (Jeremiah, 2007). However, London's iconic taxi namely black cab is one of the unique symbols of London, it is also part of Britain. It was not only chosen London most iconic transport design (London transport museum) but also it was included one of the greatest ever British design off ranking as in the sixth place (Montgomery, 2015).

National symbols are not only significant to the visitors but also to many members of a particular nation. Countries use different symbols to represent the territorial identity since those symbols could be associated with their territorial identity as

part of their national identity. For instance; the Olympic Games could be utilized to express or build territorial identity by using symbols that represent the nation. China, in 2008 The Beijing Olympics Opening Ceremony, used important cultural symbols and inventions to demonstrate Chinese national and territorial Identity (Zhiyan *et al*., 2013 p. 92). Although those symbols could be generic such as inventions or flag, some of the organisations and their products could also be utilized as a symbol of a nation. A notable example of this the usage of traditional London taxis during 2012 The London Olympics Opening ceremony. The study by Moncrieffe, and Moncrieffe, (2019) also reveals that London black cab image is used as representative of British values and British identity among primary school students.

2.6. Heritage Design

Although there are many tools to plan corporate communications, the visual identity structured by design, symbols, and graphics help the organisation to express itself (Markwick and Fill, 1997). At the beginning of corporate identity studies, design characteristics were focused more since it could be easily related to the corporate image (Gruning 1993, Brown 1998), later it is claimed that corporate identity concept is not limited to design but also different dimensions (Balmer, 1998). In early studies of corporate visual identity, the usage of design elements as part of visual identity could be listed as follows; communicating mission and philosophy, culture, and contemporaneity besides the demonstration of communication endeavour (Balmer, 1995; Baker and Balmer, 1997).

The emerging field of corporate heritage has brought attention to heritage design as the corporate heritage could be found in continuous design elements at the micro-level (Balmer, 2011a). Corporate heritage design is defined as "the pursuance and continuance of certain design features vis-à-vis products, graphic design, architecture, livery, etc. can accord an entity with heritage distinctiveness if, it has prevailed over time' (Balmer, 2013 p.318). Even though, the relation between design and heritage are mentioned and investigated at corporate level as a strategic tool by some scholars (Burghausen and Balmer, 2014a; Bargenda,

2015, Rindell *et al*., 2015, Santos *et al.,* 2016), there is no empirical study on heritage design and its relationship with customer behaviour. On the other hand, heritage design could be a base to reflect the meanings and perceptions regarding company to the consumers as situation as "Individuals are assumed to relate to objects or events based on their symbolic meaning given by society. It is a well-known fact that consumers may buy a given product for reasons other than the product's basic functional performance. People are often motivated to buy a good or service on the basis of what it represents to themselves, and to others with whom they associate or to some societal referent" (Leigh and Gabel, 1992, p. 27)". Experience scholars also contest that experiential design features positively affect customer behaviour (Schmitt, 1999b; Brakus *et al.,* 2014). From this point, heritage design could positively moderate the relation between those perceptions and customer experience. Since one of the objectives of this study to fill this gap, this section is given to explain the notion of heritage design in detail.

2.6.1 Design Heritage vs Heritage Design

As this study aims to scrutinise the notion of heritage design which is discussed in detail in the following part. However, before that for further clarity, it is important to briefly mention the difference between heritage design and design heritage.

At the macro-level, design heritage could be defined as standards, patterns or the ways of design associated with certain culture or nations. For instance; certain design standards defined as Socialist Realist architecture regulated by the Communist Party for new buildings during the Soviet Union by the help of historians (using history and past to create a new form) (Cooke, 1997). National design heritage and industrial design heritage could be part of the national identity in modern times. Fallan (2012) claims that the significance of industrial heritage as a national identity marker increasing in today's world since they can reflect collective memory. Similarly, the United Kingdom has first industrialized society place importance on industrial heritage design by having many museums such as Iron Bridge and Coalbrookdale Iron Museum (Fallan and Lees-Maffei,

2016). Some countries are aware of the significance of their design heritage and put efforts to protect them. The Netherlands, for example; built an archive called the Dutch National Design Archive to transfer it to the next generations and designers (Tollenaar and Meihuizen, 2016).

In her article Blankenship (2005) covers his teaching experience to Indian design students in India. She states that they should be aware of the unique aesthetic, design and cultural heritage and adapt to Western demand rather than just copying Western trends and style in design. On the other hand, design heritage could be unique to a region or territory rather than a whole nation. Catalan region of Spain could be given as an example of the relation of regional identity and design heritage. Narotzky (2009) states that the expression of this identity depends on the current meaning of being Catalan since it has been changing throughout the years. On the other hand, he adds that this change and transition has left a rich regional design heritage which could be exploited by the next generations.

Some well-known designers could also be part of design heritage. In his article Shaw (1984) scrutinises the works of well-known American Advertising and Graphic Designer William Addison Dwellings by comparing his design elements with a modernist approach. The author describes the well-known designer as part of American design heritage even though his reputation gradually decreased after the European domination in the United States. Raul de Caldevilla and his advertising company ETP specialized in advertising posters during the early 20th century was an important example of him impacting visual heritage of Portuguese collective memory and impact next-generation designers (Barbosa *et al.,* 2009).

On the other hand, heritage design in the traditional and non-industrial terms are mostly about protecting and preserving existing heritage values. De Witte and Meyer (2012) use the term heritage design to observe the current design of African Heritage assets. They assert that the postmodern design of African Heritage is lacking the cultural value and rather make emphasis on visual attraction. Sometimes heritage design is used by cities to demonstrate the guidelines for new buildings and ask developers to follow these design

characteristics in order to protect the existing identity (Phillip H. Carter, 2006; City of Greater Bendigo, 2015).

After explaining the difference between design heritage and heritage design in cultural and more traditional terms, it is time to look at the design heritage and heritage design in from marketing point of view since this study is interested in marketing and customers perspective. In his article, Balmer (2013) defines heritage design as: "The pursuance and continuance of certain design features vis-a` -vis products, graphic design, architecture, livery, etc. can accord an entity with heritage distinctiveness if it has prevailed over time. Also relates to the coherent visual system is in place (corporate design/house style/ visual identity)". On the contrary, the most significant dimension that differs from heritage design and design heritage is the notion of continuity. While design heritage represents the deceased design attributes, it could be revealed later and could have a symbolic value of corporate heritage (Burghausen and Balmer, 2014a).

On the other hand, the Volkswagen motor company benefited from its deceased design heritage by reinterpreting for modern needs when it re-launched the New Beetle cars after a long time to evoke the nostalgic feelings of the customer as part of retro branding strategy (Urde *et al.,* 2007). Design heritage gives companies the opportunity to use it in an attempt to orientate their brands even at the corporate level. Burberry a very well-known British clothing company also benefited from its design heritage to get over the brand crisis occurred in the 1990s (Robinson, 2016). In their study Santos (2016) and his colleagues demonstrates how a famous Portuguese company Ach. Brito, the manufacturer of soaps and toiletries, benefited from its design heritage such as packaging to create a modern identity and define the brand strategy.

Adopting Balmer's definition and corporate heritage point of view Bargenda (2015) conducts a case study of famous Bank Société Générale in which she applies suggested corporate heritage elements (Urde *et al*., 2007) to observe the bank's heritage design regarding architecture and its impact on identity-building efforts as a differentiation point. Heritage design could also include the technological part of design attributes. It is suggested that using existing

technology could reflect the continuity and reflect a symbolic meaning associated with a product (Gombrich, 1968 in Preziosi, 2009). Harley Davidson, a famous company for its motorbikes used the V-twin engine for a long time (like Porche using boxer motors in sports cars) to differentiate itself specifically from Japanese competitors, which led it to be associated with different meanings such as American national identity and freedom (Stanfield, 1992).

2.6.2 Corporate Heritage Design in Literature:

Design and visual elements have been always found place itself in the corporate identity literature. Even at the very beginning of corporate identity works, some practitioners related to corporate identity with only visual elements. In his book The Corporate Personality, well-known corporate identity consultant Wally Olins mainly focuses on visual elements as a means that corporate identity is manifested (Olins, 1978). In early studies of corporate visual identity, the usage of design elements as part of visual identity could be listed as follows; communicating mission and philosophy, and contemporaneity besides the demonstration of communication endeavour (Balmer, 1995, Baker and Balmer 1997).

On the other hand, further studies contested that even visual and design elements are very significant tools for corporate marketing objectives, they are not enough themselves to explain the corporate identity of an organisation. Although at the beginning of corporate identity studies design characteristics were focused more since it could be easily related to the corporate image (Gruning 1993, Brown 1998), later on, it is claimed that corporate identity concept is not limited to design but also different dimensions (Balmer, 1998). In other words, visual/design identity is distinctive from corporate identity and forms one layer of the corporate identity (Balmer 1995, van Riel and Balmer 1997, Baker and Balmer 1997, Melewar and Karaosmanoglu 2006, He and Balmer 2007). Design is also expressed in some of the studies related to the emerging notion of corporate heritage. Corporate heritage design is defined as "The pursuance and continuance of certain design features vis-a` -vis products, graphic design, architecture, livery, etc. can accord an entity with heritage distinctiveness if it has prevailed over time.

Also relates to the coherent visual system is in place (corporate design/house style/ visual identity)" (Balmer, 2013, p. 318).

Corporate organisations could use symbolic communication via an entity that implies the core of corporate traits as corporate standards, corporate values, corporate purposes and corporate differentiation for various stakeholder groups (Balmer, 2008). Although there are many tools to plan corporate communications, the visual identity structured by design, symbols, and graphics help the organisation to express itself (Markwick and Fill, 1997). As part of corporate identity; colour, product design, name slogan or packaging are some of the elements that build the corporate design (Melewar, 2003).

Some corporate marketing scholars have looked at the relationship between design/visual elements and an emerging notion of corporate heritage. It is suggested that corporate heritage could be reflected at different levels by different identity features such as heritage design which could be exploited to differentiate the organisation from others (Burghausen and Balmer, 2014a). The study of brands with heritage shows that some managers or decision-makers are aware of their corporate heritage (Urde *et al.*, 2007). In the same study, Volvo Cars former CEO Hans-Olov Olsson lists constant design traits as part of the heritage and says: "Heritage provides a legacy that offers us a timeless relationship to the market/customers, society partners, and employees. Over time people recognise and expect that the company will continue to deliver on these commitments (safety, quality, environment, design). It sets Volvo apart from other car companies — it is hard [for others] to copy and be trusted. Our brand is the history and the future".

It is contested that corporate organisation is responsible to manage its identity for stakeholders since consistency in design and visual identity, as well as heritage, is also significant of to keep the promise against stakeholders (Balmer, 2010). The design should carry both emotional and functional features since customers have both functional as well as emotional expectations to satisfy their needs (Abratt and Kleyn, 2012).

In favour of corporate marketing purposes; design and visual elements are used by different kind of organisations whether private or public to support the corporate identity, culture and values among stakeholders. Transport for London is a great example that has been able to keep its corporate design elements for a long time and became a widely known company. Roundel logo, double-decker red buses and underground map are the examples which have been able to keep distinctiveness over a long period of time and became icons. At this point, the significance of managers and decision-makers are visible to achieve that consistency regarding both in organisation and time period. The Chief Executive Frank Pick of London Transport built a patent corporate marketing design policy. His decision on a unified visual identification scheme made him see that corporate design elements were not only helpful to convey organisation's objectives but had a significant role to disseminate the focus on customer orientation as well as to demonstrate the entire city the integration among the transportation system (Balmer, 2012).

In his article Balmer (2012) in the case of British Airways, demonstrates how significant to protect corporate design traits that signal the corporate identity and meet the expectations of different stakeholder groups. British Airways decided to make a corporate change and replace its position as a global company rather than being a British corporation that represents the United Kingdom after their research resulted in the big portion of passenger profile is constituted by foreigner customers. As a result, British Airways reviewed its visual and design identity policy and changed it to something that represents global features and appeals to passengers from abroad. On the other hand, the company made a big mistake by replacing its British roots visual scheme providing company the vital, powerful and favourable aspects for its corporate identity. In addition, the airline company made many steps to lessen its British sides such as less stress on British provenance and British identity that could let British passengers change their attitudes toward the company in a negative way. On the other hand, the company could not realize that British aspects might probably give it strong advantages among other competitors. After a while, British Airlines decided to leave its international positioning strategy due to the negative responses from its

stakeholders. The interview made by the author and executive of the company reveals the reason behind leaving the globalization strategy. The senior executive states: "As it turned out, the airline had gone too far, too fast for its key stakeholders—customers, shareholders, employees—and the British public. The change was too drastic and in the view of many weakened the strength of our brand. There was also the perception that the proud heritage of British Airways was being swept under a carpet of modernization." This instance demonstrates that design, visual scheme and identities associated with the company are significant for organisations. Therefore, corporate organisations in the purpose of keeping its credibility, profitability, and responsibility should also consider the expectations of existing stakeholders while making changes on these dimensions.

Another study conducted by Bargenda (2015) aimed to scrutinize the relation with architecture, its heritage design and corporate identity by applying the corporate heritage elements suggested by Urde (*et al.,* 2007). It is asserted that heritage design of architecture is significant in building identity, differentiating a company and managing its reputation. Before continuing the next section, it should be noted that corporate heritage design and heritage design are interchangeably used for convenience.

2.6.2.1 Heritage Design Continuity

Many brands and organisations exploit their heritage to differentiate themselves from others while considering their heritage as an advantage among competitors. From a consumer point of view, the heritage assets of companies are associated with their longevity and continuity of the certain identity traits (Urde *et al.,* 2007; Wiedmann *et al*., 2011a). In terms of unique identity traits, which differentiate companies from others, to accrue credible identity capacity depends on maintaining those unique features (Whetten and Mackey, 2002). On the parallel, continuity is one of the main layers of corporate heritage which creates trust and credibility in regard to customer attitudes (Leigh *et al*., 2006) which has an impact on customer behaviours (Eagly and Chaiken 1993, p. 155). The continuity of

heritage assets represents the timelessness, history, authenticity the ability to transcend trends (Mohart *et al*., 2011, Balmer, 2011).

Heritage design also is compatible in terms of the sociological side of heritage itself, which is defined as persistence, continuous values declared through materialism with an associated meaning such as collective identity (Macdonald, 2006). Heritage design representing the corporate heritage of an organisation at micro-level (Balmer 2011, Balmer 2013), sometimes could be meaningful at the times uncertainty because of its continuity (Balmer 2011). In his pioneering article on corporate heritage, while giving a brief definition of corporate heritage design, Balmer (2013) emphasizes the continuity of certain design features of different assets such as products, graphic design, architecture, etc. Although heritage design could be a reflection of corporate heritage at the micro-level (Balmer, 2013), the stewardship of heritage design elements is vital to exploit existing heritage. At this point, the definition of brand stewardship also places importance on preserving heritage since it is defined as 'managerial mindset for nurturing, maintaining and protecting corporate heritage': track record, longevity, core values, symbols and history (Urde *et al*, 2007, p. 9).

The notion of continuity drew the attention of some scholars to reveal and define the authenticity of a long-lasted organisation with heritage. For instance; in their empirical study Mohart (*et al.,* 2015) and his colleagues found out that continuity contributed the authenticity perceived by the consumers. It could be asserted the same for the heritage design if it is one of the prominent heritage assets of an organisation since consumers search for authenticity which adds meaning (Beverland, 2005a). Although Mohart (*et al.,* 2015) scrutinize the continuity of overall brand, the results show that customers find the cues of continuity from the design characteristics by mentioning certain continuous design packaging and clothes of related brands. Corporate heritage studies also link the notion of authenticity with the continuity, yet it should be noted that continuity and change should occur at the same time to meet the contemporary needs of stakeholders (Balmer, 2011; Blombäck, and Scandelius, 2013).

If continuous heritage design characteristics are changed completely, stakeholders might start to think that the company is not keeping its promise. However, some companies are willing to make the change as a strategy; they might also lose the associated meanings with those design features, which might lead to negative responses from customers. In his article Balmer (2012) in the case of British Airways, demonstrates how significant to protect corporate design traits that signal the corporate identity and meet the expectations of different stakeholder groups as the attempt of changing heritage design features led company to receive negative comments from its customers. In another corporate heritage study, Rindell (*et al*., 2015) and other scholars aimed to scrutinize the consumer perspective on corporate heritage image by conducting qualitative research on the well-known Italian scooter company Vespa within the Vespa community. They concluded that the change in heritage found in product design has a negative impact on costumers' perception, which conflicts with the company claims regarding protecting its heritage since the heritage design is seen as a symbol with unique meanings. This confirms that the corporate heritage assets as valuable assets should be considered carefully by companies since " "a strategic opportunity to re-interpret aspects of their past in the light of contemporary concerns and purposes but potentially also impose strategic constraints in regard to various interpretations amongst internal and external stakeholders that may lead to conflicting accounts of the corporate past" (Burghausen and Balmer, 2014b p.396).

To differentiate products, companies should consider that design attributes not only be limited by their utilitarian values but also be a tool to convey a meaning. Latour (2005) uses Actor-Network Theory which refers to the idea of product script analysis of how products transport and transform meaning. On the other hand, Akrich prefers using the term "script" as an analogy for the "instruction manual" and she asserts that it is inscribed in an artefact. Artefacts contain a "message from the producer/designer to the user describing the product's intended use and meaning. (Fallan, 2008, p.62)"

While explaining symbolic interactionism Leigh and Gabel (1992, p. 27) state that "Individuals are assumed to relate to objects or events based on their

symbolic meaning given by society. It is a well-known fact that consumers may buy a given product for reasons other than the product's basic functional performance. People are often motivated to buy a good or service based on what it represents to themselves, and to others with whom they associate or to some societal referent". As companies strive to differentiate their product, it should address not only functional but also other values such as social and psychological (Snelders and Schoormans, 2004).

Companies might create products or services that could have different meanings and symbolic values. For instance; Dittmar (1992) put those symbolic values into two different categories as follows; self- expressive and categorical meanings. Self-expressive symbolism refers to products giving individuals a way of expression for their unique identity including values and attributes. Self- expressive allows people to differentiate themselves from others (Csikszentmihalyi and Halton, 1981). On the other hand, categorical symbolism refers to the products being a tool for individuals to express themselves as part of a group.

Based on the mentioned above design attributes has not only to acquire functional values but they also reflect symbolic values and meanings. Looking from the semiotic perspective, the design is considered a sign accruing representation capability which customer response to mostly based on visual cues (Vihma 1995). Customers also give a positive response to the products with non-functional features in terms of experience (Schmitt, 1999; Brakus *et al*., 2014), which makes the symbolic value of design significant for companies. It is argued that design is significant because of the role of products as "a portal to an experience" (Brunner *et al.,* 2008). The design does not only deal with the utilitarian needs of customers. It also deals with the meanings as emotional and symbolic value of the product. Verganti (2008) asserts that ''If functionality aims at satisfying the utilitarian needs of customers, the product meaning (through design) tickles their affective and sociocultural needs'' (p. 440)."

Rapport states that being an existential anchor and reflecting continuity, heritage has certain meanings (Rapport, 2002). On the parallel of that, there are multiple stakeholder groups regarding heritage or corporate heritage. Hence it

creates the possibility for those groups to interpret, identify or assign their own meanings to the same heritage asset (Apostolakis, 2003). On the other, hand those possibilities show that any layer of corporate heritage including heritage design is quite meaningful for companies (Balmer, 2011). Although traditional heritage concept is limited by the past (Lowenthal, 1998), it is claimed that the meaningfulness of corporate heritage identities includes past, present and prospective future (Balmer *et al.,* 2006; Urde *et al.,* 2007).

The heritage assets of any company reflect longevity and sustainability which is seen as a promise by stakeholders in regard to brand values, performance and authenticity (Urde 2003). Hence, heritage is meaningful to consumers, which can lead them to pay higher prices and show more loyalty to the company (Urde *et al.,* 2007). On the other hand, the past could be exploited by the managers as a benchmark (Brunnige, 2009). Hence, companies should consider all three-time facets in terms of heritage design in order to protect associated meanings assigned to it by the customers. Although it should be noted that familiar design and symbols might be maintained as part of the corporate heritage, Balmer asserted that the meaning assigned to those design and symbols could change (Balmer, 2011).

In their study Urde (*et al*., 2007) scrutinize the brands with decent corporate heritage. They assert that symbols, design (e.g. Tiffany Blue, Band & Olufsen design) could be used as symbols to communicate brand identity and some might have their own identity or deeper meaning such as the Mercedes Star or the five rings of Olympics. It is suggested that using existing technology as part of the design could reflect the continuity and reflect a symbolic meaning associated with a product (Gombrich, 1968 in Preziosi, 2009). Harley Davidson, a famous company for its motorbikes used the V-twin engine for a long time to differentiate itself specifically from Japanese competitors, which led it to be associated with different meanings such as American national identity and freedom (Stanfield, 1992).

"Visual references may also influence the symbolic associations a product evokes by connecting it with other entities that are already seen to hold some social meaning." (Crilly *et al.,* 2004, p. 565.) Over a certain period, thanks to its

continuity, corporate heritage elements including design could be associated with a certain culture (Balmer, 2013). A case study of French bank Société Générale shows that the design characteristics heritage its architectural heritage accrued meaning over time and represents the French culture in some extend (Bargenda, 2015). Similarly, a historic Chinese heritage pharmacy company Tong Ren Tang for a long time uses the colours and logos and both are associated with the Chinese Imperial Heritage, which has a positive impact on customers satisfaction (Balmer and Chen, 2015, Balmer and Chen 2017).

2.6.2.2 Heritage Design Familiarity

Most of the marketing efforts target to inform brands to create and convey distinctive identity and put them into a meaningful as well as recognisable form (Aaker, 1991, 1996). There is an accepted view among scholars that familiarity has a strong relation with favourability (Ind, 1977 p.7). Hence it is suggested that "recognition is an important response to strive for because familiarity breeds favourability "(Abratt, 1989, p. 68) which could also be achieved through consistency (Berstein, 1984).

In their article Yoo (2000) and his colleagues suggested that familiarity and awareness with attached associations have a positive impact on customer perception of an organisation and loyalty to the products and services that are offered by the corporation. This could be achieved by keeping the inherited design characteristics by the organisation. This is also an important thing task for administration to protect the continuous design characteristics in order to keep existing awareness and familiarity which could provide a competitive advantage against the rivals. Companies seek to create distinctive design attributes to make their products or services recognizable among the customers (Person and Snelders, 2010).

It is a general view that companies desire to stand out among others by creating a unique brand identity. Although organisations could use different strategies to successfully differentiate themselves, one way to achieve this goal could be maintaining consistency on familiar design characteristics over time (Karjalainen,

2007). It is not significant for companies since customers also tend to search for familiarity regarding design. In their study, Khalid and Helander (2004) asserted that familiarity is one of the consumer needs regarding the design attributes of any product. Some companies (Braun, Ralph Lauren) chose to use unique design ways, help them to preserve recognisability, since design attributes could help companies to create or preserve meanings and identities at both brand and corporate level (Forty, 1986). Making references to past familiar design element for new products, many examples on the automotive industry (Rolls Royce, Jaguar etc.) bring minds the attached meaning and identity, which help companies to keep their promise to the stakeholders (Crilly *et al.,* 2004).

Heritage characteristics of the organisations, thanks to its familiarity might be reference point among customers (Balmer, 2011a; Balmer, 2012; Burhausen and Balmer 2014a). In their empirical study Wiedman (*et al*., 2011b) on brand heritage and its effect on consumer attitudes besides consumer behaviour, familiarity is used as one of the antecedents of the brand heritage, which showed significant relation. Hence, it could be asserted that familiarity is also antecedents of heritage design as a corporate heritage asset. Wuestefeld (*et al.,* 2012) also suggested that familiarity is part of the brand heritage that has a relation with the value perceived by customers. As part of the heritage, heritage design could also be a platform that gives recognition to the brands. For instance; well-known British Car brand Jaguar uses a Leaper on the hood, gives an animal feeling, is the recognition point (Urde *et al.,* 2007). There are many companies such as Burberry, Rolls Royce which could be described as heritage brands using attractive and recognizable design elements to convey their identity through it. Some scholars agreed on keeping design attributes recognizable to create a brand identity (Nueno and Quelch, 1998; Oknokwo, 2007) which is also important for heritage organisations (Balmer, 2013).

For stakeholders including customers, over time heritage traits such as familiar heritage design offering an Omni-temporal relationship could be perceived as commitment and set the expectation of company holding on these commitments (Urde *et al.,* 2007). Any excessive change in the design characteristics will be notified by the people since they lead them to compare the new features with the

familiar ones (Crilly *et al*., 2004). The heritage design strategy should be built on maintaining familiarity and recognisable as it might have a negative response from customers if organisations do not keen to keep it as its commitment (Rindell *et al.,* 2015).

In some cases, organisations that are categorised as nonprintable could also benefit from their continuous design attributes to keep their identity. For instance; London transportation specifically underground is an important example of the strategy of preserving its heritage design. The logo of London Underground, the trains and the tube map have improved and revived but they have successfully preserved their recognizable and familiar look which makes them unique. (Skapinker, 2014).

2.6.2.3 Heritage Design Functionality

Although one of the main components of corporate heritage is continuity, companies should be innovative to keep those assets relevant based on modern customer needs. Since corporate heritage is not only relevant to the past but part of its Omni-temporal character, it has to be linked to the present and prospective future (Balmer, 2013). Innovativeness has been a subject discussed by scholars to provide industry and companies with a way of differentiation.

The topic of innovation has been scrutinized by many scholars since it has become a vital tool for companies and firms. The reason behind these discussions through product or service improvement comes from the importance of innovation since it is significant tool to keep brand up to date as well as another way to promote them (Aaker, 2004; 2007; Beverland, 2005b; Beverland *et al*., 2010, Keller, 2003; Weerawardena *et al*., 2006). The innovation is one of the main tools to create brand values (Mizik and Jacobson, 2003) which could help them to reflect creativeness and reinventing capabilities (Kapferer, 2004).

The change of long-lasting brands, heritage brands, is also important to stay relevant to the changing environment and stakeholder needs. Balmer introduces the term Relative invariance and defines it as "To me, corporate heritage identities are special in that they are a fusion of continuity and of change; of differing

identities, time frames and meanings" (2011a, p. 1390). In another study regarding the famous Chinese heritage Brand, Tong Ren Tang; Balmer and Chen (2015) links the successful sustainability of the pharmacy company with their embracement of both constancy and change.

The design could help companies to reflect their innovative site and adapt their product or services to changing customer desires. Many of the firms try to gain competitive advantage through the innovative efforts on design elements (Berkowitz, 1987; Olson *et al.,* 1998). Gemser and Leenders (2001, p. 35) suggest that ''Being innovative with respect to design and design strategy can enhance competitiveness regardless of industry evolution.'' Companies should consider the brand heritage and consistent design attributes in order to respect the heritage that could also help the positioning of the firms, which requires diffusion of reviving heritage design elements and current customer needs (Beverland, 2005b). Not only industrial heritage brands but even Monarchs are more successful when they achieve to protect their heritage while embracing the change to be relevant to the changing environments (Balmer *et al.,* 2006).

A simple way of keeping products relevant to the present, companies should take the utilitarian values into consideration to meet the changing needs of stakeholders. For instance; Functionality is a significant element for companies to keep it updated since they need to stay relevant and meet the basic needs of customers. Although it is asserted that customers' satisfaction relies on the wants rather than needs (Lewalski, 1988), functionality is a significant perceived attribute that helps customers to judge a product (Mono 1997) as well as has an impact on their behaviour (Luchs and Swan, 2011). Hence heritage design should be functional enough to be relevant to the present time and not become an antique which conflict with the idea of heritage assets being linked to past, present and prospective future. For instance; Cunard, a famous heritage brand for cruise lines, aims to provide experiences that are "stylistically traditional" but which are adapted for modern audiences (Hudson, 2011). The company adapted the original design element of Queen Mary cruise ship when they launch the Queen Mary 2 while using modern technology to meet the current functional desires of passengers. Volvo is another example of heritage design with certain meanings

such as safety and quality (Urde *et al.,* 2007). In order to protect their identity and the meaning attached to the design elements, the company maintains these cues to be distinctive while in terms of the form including functionality, they also embrace changes (Karjalainen, 2007). On the other hand, it should be noted that if companies embrace true innovativeness rather than embracing both change and consistency on design efforts, it might cause to lose the inherited meanings among customers and led them to give some negative response (Rindell *et al.,* 2015).

2.6.2.4 Heritage Design Aesthetic

The aesthetic value of the design is one of the attributes in which customers place importance while interacting with a product, service or brand. Since customer experience has multiple dimensions, companies should also look for the design elements addressing the aesthetical needs of customers. Customer experience studies suggest that products, service or brands should create an experience for all human senses including visual senses (Holbrook and Hirschman 1982; Schmitt 1999a; Schmitt 1999b; Joy and Sherry 2003; Brakus *et al.*, 2009, Lemon and Verhoef, 2016). Marketing scholars have been emphasized the aesthetic value of products for a long time since it could be potential to provide customer pleasure (Holbrook and Zirlin 1985; Kumar and Greg 2010). Hence it is also significant for developing, differentiating or having a competitive advantage regarding product development (Whitney 1988; Dickson and Ginter 1987; Kotler and Rath 1984; Veryzer and Hutchinson 1998). It is suggested that product design is not only about form or functions (Noble and Kumar 2010). Hence the aesthetics of design in marketing have been explicitly expressed by various scholars (Holbrook 1999; Kumar and Noble, 2016).

Although the design element has been mentioned within corporate heritage design studies, the aesthetics of heritage design have not been scrutinised in detail since those studies cover do not investigate heritage design in detail. Instead, the relation between heritage design and the corporate heritage has been examined in order to explain the role of heritage design within corporate heritage itself. For

instance, it is suggested that heritage design could be part of keeping promises for the customers within the companies with a heritage (Urde *et al.*, 2007) or it could be one of the significant tools to communicate the corporate heritage (Balmer 2011; Hudson and Balmer, 2013). Similarly; heritage design could be used to activate or reconnect corporate heritage of a company (Hudson, 2011; Cooper *et al*., 2015; Santos *et al.*, 2016) as well as it might help organisations to reflect the certain connection with other social identities such as culture (Bargenda, 2015) or certain monarchies (Balmer, 2011; Balmer and Chen 2017). In another heritage study on Cunard Line Cruise Company, it is suggested that heritage design could communicate brand identity, activate/revive heritage and help to maintain associated meanings as well as customers' existing expectations (Hudson, 2011). In the literature, a few corporate heritage studies have mentioned the aesthetic side of heritage (Burghausen and Balmer, 2014a; Schroeder *et al*., 2017). Burghausen and Balmer state that aesthetic materials could be part of manifesting strategies regarding corporate heritage (Burghausen and Balmer, 2014a). In their study, Schroeder and his colleagues argue the ways how emerging companies use Chinese aesthetic and culture to build and convey their unique brand identity (Schroeder *et al*., 2017).

Although corporate heritage scholars do not specifically address the aesthetic side of heritage design, some studies examining brands with heritage suggest that aesthetic is a significant part of the brand identity besides it creates emotional value for the customers. Looking through the customer perspective, customers are looking not for functional value but also hedonic value to satisfy their needs (Babin *et al*., 1994) and the aesthetic is part of the success for companies to satisfy customers (Arnold and Reynolds, 2003). The sight including aesthetics as a sensory experience is also accepted as one of the dimensions in experiential marketing (Schmitt and Simonson, 19997; Schmitt 1999; Pine and Gilmore, 1999; Brakus *et al*., 2009). For instance; after examining various brands including brands with heritage such as Harley Davidson, Ikea, McDonald's, Gentile and his colleagues found out that if there is no obvious link between core function and a sense, the sight, which addresses aesthetics, is perceived the most important (Gentile *et al*., 2007). Similarly, some studies on luxury brands with heritage also

emphasize the aesthetic value of brand, products or services (Tynan *et al.*, 2010). Although those studies classify brands as a luxury rather than heritage brands, they still list the heritage and past and aesthetics as layers of many luxury brands. For instance; while mentioning many luxury brands such as Luis Viton, Cartier, Porsche etc.., they emphasise heritage and aesthetic value are some of the dimensions that what make a luxury brand (Kapferer and Bastien, 2012). Even though; the aesthetic part of the heritage has been also mentioned by a few corporate heritage researchers (Burghasen and Balmer, 2014; Schroeder *et al.*, 2017), there is no study on perception of customers on aesthetics of heritage design within the corporate heritage field. This study aims to find out how customers respond to aesthetics as a dimension of heritage design. Hence, aesthetics is accepted as one of the dimensions of heritage design.

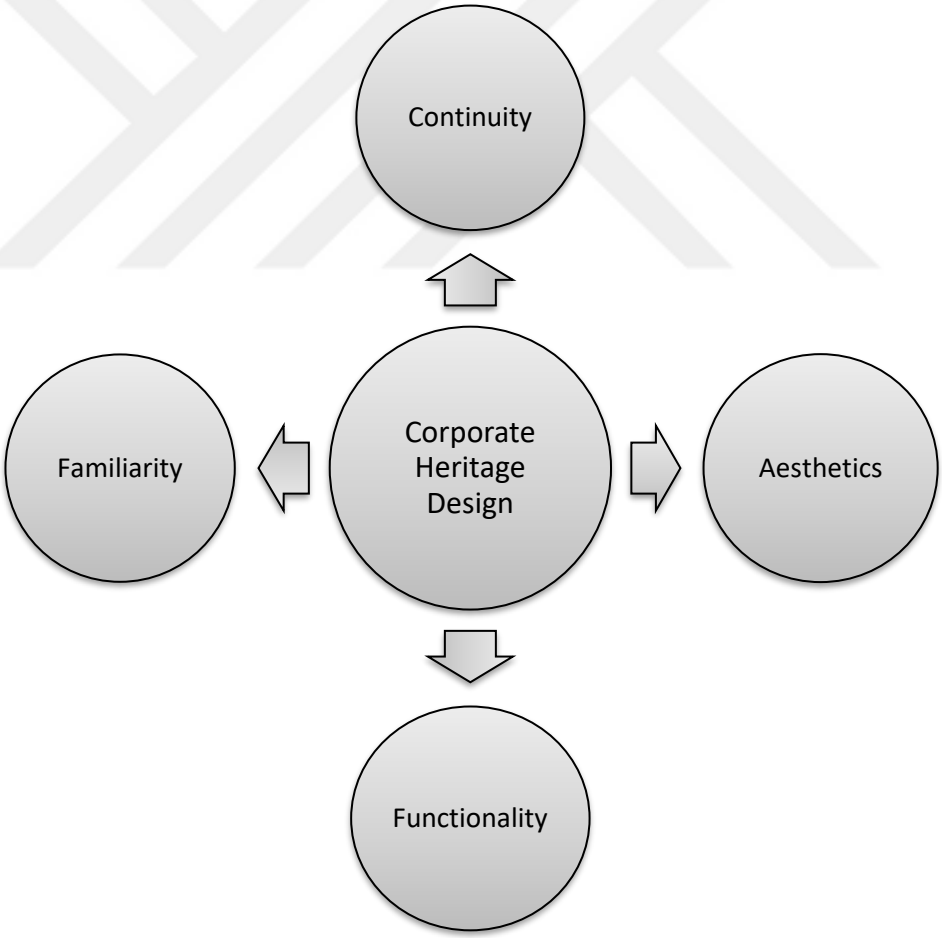

Figure 2.2: Antecedents of Corporate Heritage Design

2.7. Customer Experience and Satisfaction

2.7.1 Customer Satisfaction

Although this study aims to find out the impact of heritage design between customer perception of a company and satisfaction, it relies on the experience since the satisfaction is the result of the comparison between expectations and performance during customer experiences. From a common perspective, scholars conceptualise customer satisfaction as a result when customers compare the actual performance and their expectations. Many empirical studies showed that customer satisfaction is created as to whether positive or negative disconfirmation of expectations (Oliver 1999, Yi 1990, Lemon and Verhoef 2016). While Oliver (1993) claims that customer satisfaction is the judgement as a result of the customer evaluation after the experience or purchase, Meyer and Schwager (2007, p. 2) suggests that customer satisfaction is 'the culmination of a series of customer experiences or, one could say, the net result of the good ones minus the bad ones'. Hence the subject of customer experience will be explained in detail in the following part of this section

Various measurements for customer satisfaction have been discussed by researchers. Whilst some scholars suggested direct measurement (i.e., "How satisfied are you about XXX?"; Bolton 1998), others prefer multiple items to comprehend customer emotions on satisfaction (such as happiness; e.g., Oliver 1980; Westbrook and Oliver 1991). Although customer satisfaction is mostly measured at the transaction base by applied marketers, some scholars seek to measure customer satisfaction with customer's experiences with a company (Gupta and Zeithlam 2006).

Since one of the main purposes of this study is to understand the London Taxi, its corporate heritage dimensions specifically design traits and its impact on the relation between with the corporate identities and customer satisfaction through experience rather than detail dimensions of satisfaction, overall satisfaction will be measured in a summative way (e.g., Bolton and Lenon, 1999, Hosany, 2013).

2.7.2 Customer Experience

As the driver of satisfaction, customer experience is drawing more and more attention from companies which desire to provide distinctive product or service offerings, especially in the competitive and saturated markets. In early experience studies, the concept of customer experience changed from truly focusing on products to experience because people actually demand satisfying experiences, not products (Abbott 1955, p. 40). In addition to this point of view, human behaviour and the significance of emotional layers of experience started to get recognized by researchers (Holbrook and Hirschman 1982).

In marketing literature, experience has been observed within various specific concepts. Some studies focus on product experience which is referred as the customer evaluation, judgement and attitudes occurring after direct or indirect contact with a product (Hoch and Ha 1986; Huffman and Houston 1993; Kemp and Smith 1998). Additionally, the experience is also described by some researchers with an emphasis on aesthetic concerns and it is described as aesthetic experience (Joy and Sherry 2003). On the other hand, some studies looked at the shopping and service category to explain the effects of atmosphere and sales staff on customer experience (Hui and Bateson 1991; Kerin *et al*., 2002; Arnold *et al.,* 2005). Another experience concept suggested by scholars is consumption experience which results in the use and consumption of a product. Halbrook and Hirschman (1982) suggest that hedonism part such as feelings, fantasies and fun are some of the dimensions of the consumption experience.

The psychological part of the experience has also been considered in the experience studies. It is suggested that experience is the perception constructed in the mind of the customer after encountering product, service or companies (Carbone and Haeckel 1994, p.9). On the other hand, some argued that it is not the perception, but the subjective response created internally as a result of customer engagement whether directly or indirectly (Meyer and Schwager 2007). Hence, it could be suggested that experience is individual to a customer besides it has multiple dimensions (Gentile *et al*., 2007).

Whilst in their study of a marketing practice Pine and Gilmore (1999) scrutinized staged experiences with the limitation of retail events, their conceptualization of experience by defining different dimensions as sensory/ aesthetic, intellectual/educational, and emotional/entertaining pathed the way for later studies to consider the various facets of experiences. Similarly, Schmitt (1999a) identifies experience from a multidimensional point of view and suggests five types of experiences: sensory (sense), affective (feel), cognitive (think), physical (act), and social-identity (relate) experiences.

Although there are many definitions of customer experience, in this study the prominent definition in the literature will be used. Pine and Gilmore (1998, p. 3) define experience as "spend time enjoying a series of memorable events that a company stages … to engage him in an inherently personal way." However, some scholars opposing this definition by adopting the wider point of view and suggests that each interaction leads to customer experience which does not rely on the type of form or nature of it (Schmitt *et al.,* 2015).

Another broad definition of experience is "encompassing every aspect of a company's offering—the quality of customer care, of course, but also advertising, packaging, product and service features, ease of use, and reliability. It is the internal and subjective response customers have to any direct or indirect contact with a company" (Meyer and Schwager 2007, p. 2). Although customer experience is described on product and service level, Brakus (*et al.,* 2009) uses the concept of brand experience to incorporate company's identity or other related stimuli that have an impact on customer experience besides adopting multi-dimensions of experience. They define brand experience as "Thus, we conceptualize brand experience as subjective, internal consumer responses (sensations, feelings, and cognitions) and behavioural responses evoked by brand-related stimuli that are part of a brand's design and identity, packaging, communications, and environments." (Brakus *et al.,* 2009, p. 53).

In spite of the fact that, in the experience literature the perspective on the antecedents differs from scholar to scholar, most of the studies approach with a holistic perspective by looking through a comprehensive perspective. As a result

of that, customer experience includes different returns from customers such as sensory, emotional, cognitive and social (Schmitt, 1999; Gentile *et al*., 2007; Frow and Payne, 2007; Brakus *et al*., 2009; Rose *et al*., 2011; Lemon and Verhoef, 2016). Even though different studies are conducted in different contexts whether online (Rose *et al*., 2012; Simon *et al*., 2013), retailing (Kim *et al*., 2015), multiple brands (Gentile *et al*., 2007; Verhoef *et al.,* 2009; Brakus *et al*., 2009; Iglesias *et al*., 2011), or tourism (Barnes *et al*., 2014) approves the expansive point of view of customer experience by looking into different layers of it.

Even though, there are many arguments on the dimensions of customer experience, the major dimensions adopted by the greater number of scholars inform the current study. Those dimensions can be listed as follows; sensory (sense), affective (feel), cognitive (think), physical (behavioural/act) and relational (social identity/relate) experiences of customers (Schmitt 1999a, Brakus *et al*., 2009). It should be noted that, as the design is one of the main subjects of this study, it is asserted that there is a strong relationship between customer experience and the design at a different dimension of experience (Schmitt, 1999b).

2.7.2.1 Sensory Experience

As stated above the scholars on customer experience has the main agreement on multi-dimensional nature of it. One of the main dimensions is called sensory experience which is significant to create a powerful customer experience. The pioneering study of Schmitt (1999a) includes the five senses of human that should be addressed by the companies when targeting customers to have a strong experience. Since the sensory dimension of customer experience has been part of the main studies in marketing literature, this study adopts sensory experience as part of the customer experience. Following the Schmitt (1999a) theory of experience, several researchers have concluded that sensory experience is a significant part of customer experience (Chen *et al.,* 2014; Barnes *et al*., 2014; Brakus *et al*., 2009; Iglesias *et al*., 2011; Keng *et al*., 2013; Kim *et al*., 2015; Beckman *et al*., 2013; Nysveen *et al*., 2013; Simon, 2013; Nysveen and Pedersen,

2014; Gentile *et al.*, 2007). This research adopts the definition of sensory experience made by Brakus (*et al.,* 2009) including the five human senses which are sight, sound, taste, touch. The reason behind that the companies with heritage could also provide a sensory experience to its customers whom could engage with the product, service or brand for a strong experience (Balmer, 2011; Burghausen and Balmer, 2014a).

Sensory experience is also important to the customers of certain companies that have had heritage assets. Balmer (2013, p. 311) suggests that corporate heritage could be created and utilized if there is a consistent multi-sensory dimension within the organisation. The study contests that sensory utilization is "Sound, scent, touch, vision, and taste –individually, as a combination or in their entirety can accord an entity with heritage distinctiveness if it has prevailed over time". Another corporate heritage study conducted with the managers identified multi-sensory identity system as "the importance given to and the amalgamation of the senses that is sight, sound, scent, taste, touch (multi-sensory) by which an organization's identity manifests vis-à-vis internal and external stakeholders"(Burghausen and Balmer, 2014a, p. 2312).

It is suggested that to create a strong customer experience, the sensory part should be addressed by the companies. Based on the literature mentioned above, this study considers sensory experience as part of the customer experience and it is an influence on the experience of the London Taxi users.

2.7.2.2 Affective Experience

Affective customer experience reflects the feelings, attitudes, moods, or the emotions of customers towards a product, service or brand. Major studies on customer experience listed the affective dimension as of the dimensions of experience (Schmitt, 1999a; Brakus *et al.*, 2009). Many researchers have found out the positive relation between affective dimension and customer experience. For instance; empirical studies conducted on online customer experience showed that there is a strong connection between affective dimension and customer

experience, which positively impacts customer satisfaction (Rose *et al.*, 2011; 2012).

This research also adopts the affective dimension of customer experience after following the main literature using the affective dimension to measure customer experience. The layers of affective experience are mainly referring to mood, attractive, feelings, and emotions. According to some authors, the experience is formed by both individual rational (cognitive) and emotional (affective) experience with any brand or company as well as their stimulus leading customers create those experience types in an internal way (Frow and Payne, 2007). Hence companies should consider creating triggers for individuals to feed both cognitive and emotional side for a true customer experience formation.

Halbrook and Hirschman (1982) suggest that hedonism part such as feelings, fantasies and fun are some of the dimensions of the consumption experience. Brakus (*et al*., 2014) also emphasized the emotional part of customer experience and should be addressed by the companies while developing new products by giving examples from automotive, technology and other industries. Not just products or services but also visual tools could create an emotional experience. Some studies suggest that certain brands utilize their advertisements and posters to create positive customer experience (Simon *et al*., 2013).

Affective experience has also been noticed by the corporate heritage scholars since the emotional attitudes of customers towards heritage brands could provide competitive advantage (Balmer, 2010). For instance; to link past present and future; heritage organisations could use individual stories on reports or press release as part of narrating strategy to create emotional dimensions for its stakeholders (Burghausen and Balmer, 2014b).

It is also stated that heritage organisations of companies with heritage dimension could create positive emotions for different stakeholders such as monarchies as an example of heritage organisations (Balmer *et al.,* 2006; Balmer, 2011a).

Finally, this study defines the affective experience as the moods, feelings, attention and emotion of customers to build positive customer experience. Based on the main customer experience studies (Schmitt, 1999a; Brakus *et al.,* 2009) the

research adopts the affective dimension of customer experience to measure the experience with traditional London taxis since it has a heritage dimension which has been linked the positive emotions by the scholars.

2.7.2.3 Behavioural Experience

The behavioural dimension part of the experience is one of the layers constituting customer experience and it refers to the act and the attitude regarding the customers towards the product, service or brand. Behavioural experience is defined as an "act" by one of the main customer experience scholar Schmitt (1999a). On the other hand, some scholars refer it as the action physically created and carried by humans regarding the experience (Brakus *et al*., 2009; Barnes *et al*., 2014; Nysveen *et al*., 2013). In addition to that, those actions and behaviours are conveyed through individual attitudes towards brands (Brakus *et al.,* 2009).

To develop the elements that construct customer experience of behavioural part, many studies have conducted by experience scholars (Keng *et al*., 2013; Beckman *et al*., 2013; Barnes *et al*., 2014; Brakus *et al*., 2009; Chen, 2014; Kim *et al*., 2015; Iglesias *et al*., 2011; Nysveen *et al*., 2013; Nysveen and Pedersen, 2014). These studies have noted that the reactions of the human body, as well as the voice, are the key factors constituting behavioural experience.

Some studies have demonstrated the behavioural experience by giving specific examples for further clarification. For instance; Schmitt (2008) explains the behavioural experience dimension by using a visit made by people to a new place. He suggests that making windsurf on the ocean could be an enjoyable activity for visitors. On top of that, when visitors stop by a night club, they will enjoy dancing. Regarding the behavioural experience, those actions created by the visitors are accepted as positive reactions to a place which is considered as a brand. It is suggested that positive customer experience create positive customer behaviours such as satisfaction and loyalty (Brakus *et al.,* 2009). Since behavioural experience relies on human, it is relatively not easy to control or manage. It is also contested that there is a positive correlation between customer attitudes and behaviour

while interacting with a brand, which also confirms Schmitt (1999a) reflection on customer experience (Kinard and Hartman, 2013).

Behavioural experience has also been covered by corporate marketing scholars from a different point of view. Since corporate marketing look at stakeholder point of views, it is suggested that not just customers but also employees' attitudes and behaviours could also be used to measure behavioural experience towards corporate brands. At this point, Van Riel and Balmer (1997) emphasized the significant role of the employees to convey the corporate identity to other stakeholders. The perceived identity and the reputation of a company are affected by the employee's behaviours towards customers. In addition to that their behaviour could impact sales, market environments and corporate performance. The relation between corporate behaviour and its impact on corporate brand identity creation has been highlighted by several scholars (Abratt, 1989; Albert and Whetten, 1985 in Balmer and Greysen, 2003 ; Balmer, 1994; 1995; Ramanantsoa and Thiery-Basle, 1989; van Rekom, 1993; van Riel, 1992; 1995; Wiedmann, 1988). Hence any company with heritage should monitor their employee's behaviour towards customers to increase customer satisfaction as well as they should listen to their customers via feedback to improve both customer satisfaction and experience.

In this study, the customer's attitudes and beliefs towards companies with heritage, assist the satisfaction after their experience with the related organisation. To create a decent relationship between customers and the firms, after experiencing product, service or brand, their actions and attitudes should be noted by the organisations.

2.7.2.4 Intellectual Experience

Another customer experience dimension is defined as intellectual experience is also significant for companies. In order to create a strong relationship with customers, companies should also be aware of the intellectual experience since it provides customers to think about a brand and build a personal connection. In

many customer experiences studies the intellectual experience is defined basically as "think" regarding product, service or brand. The term think is referring to the curiosity and solving problem stimulated during customer experience (Barnes *et al*., 2014; Zarantonello and Schmitt 2010).

After the pioneering customer experience theory by Schmitt (1999a), many researchers follow his view and have an agreement on the point of view that it is important to stimulate customer interest via intellectual experience in order to create a successful experience (Kim *et al*., 2015; Chen, 2014; Barnes *et al*., 2014; Keng *et al*., 2013; Beckman *et al*., 2013; Nysveen *et al*., 2013; Iglesias *et al*., 2011; Brakus *et al*., 2009). It is contested that companies are required to understand both demands of market and customers to stimulate an intellectual part of customers regarding brands, which is highlighted by some scholars by linking the intellectual experience with cognitive action (Nambisan and Baron, 2007; 2009; Nysveen and Pedersen, 2014). Some suggest that creating co-creation activities could help companies to stimulate cognitive experience (Nysveen and Pedersen, 2014). If customers are satisfied with a brand, they think about the brand and usually prefer to browse the offers of that brand rather than checking out other brands. Those cognitive activities and experiences regarding the brand include customer screening of news, new product or services, news and other activities regarding their favourable brand. Hence those cognitive activities create more customer engagement and positive customer experience.

Cognitive activities affecting intellectual experience is significant to any brands. Barnes (*et al*., 2014) use place brand to clarify intellectual experience by giving visitor experience as an example. He suggests that when people visit a new place, curiosity is increased, and it creates an intellectual experience. On the other hand, some studies contest that customers learning the process of using a product could also stimulate cognitive activity and intellectual experience (Hollebeek, 2011). Based on the studies mention above, it could be suggested that companies should make efforts to create an intellectual experience for the customers to increase their connection with the company which could lead to more satisfaction.

The intellectual experience could be a result of different ways of thinking as a study conducted by Cacioppo and Petty (1982) defines intellectual experience as a result of divergent and convergent thinking. They also add that cognitive actions are significant to create intellectual customer experience and engagement. Following the literature mentioned above, the current study also includes the intellectual experience as part of customer experience which is suggested by main experience studies (Schmitt, 1999a; Brakus *et al.,* 2009). Finally, the intellectual experience dimension refers to how companies with heritage stimulate customers regarding curiosity and problem-solving.

2.7.2.5 Social Experience

People, in general, have certain needs to satisfy during their lifespan. On the other hand, those needs are not limited to physical ones. They also have a desire to socially relate to other groups as well as accepted by others. As a result, they might improve their selves and become closer to the ideal self which they see as a way of self-accomplishment. Well-known hierarchy of needs proposed by Maslow locates social, esteem and self-actualization need above the physiological and safety needs (Kotko-Rivera, 2006). Since companies and marketers have also been aware of social needs, they try to provide a customer experience that also addresses social needs. Similarly, many marketing scholars specifically in customer experience field have recognised social experience as a significant layer of customer experience (Holbrook and Hirschman, 1982; Holt, 1995; Schmitt, 1999a; Mascarenhas *et al.*, 2006; Gentile *et al*., 2007; Brakus *et al*., 2009, Verhoef *et al.*, 2009: Lemon and Verhoef, 2016)

Pioneering experiential marketing scholar Schmitt labels social dimension of experience as Relate and defines as "social-identity experiences that result from relating to a reference group or culture" (Schmitt, 1999a p.53). While explaining different dimensions of experience via marketing campaigns, he asserts that relate marketing campaigns address not only include other dimensions of experiences but also social needs of customers who desire to connect themselves social

identities or social groups in order to reach self-improvement, ideal self and getting approval from other individuals. On the parallel way, the social dimension is asserted as a separate dimension of customer experience in other customer experience studies (Verhoef *et al.*, 2009; Lemon and Verhoef, 2016).

Gentile (*et al.*, 2007, p. 398) expands the Schmitt's definition of relational (social) component of customer experience as "a component of the Customer Experience that involves the person and, beyond, his/her social context, his/her relationship with other people or also with his/her ideal self. He adds via a relational component of experience; customers could belong to a social group or distinct from a social group as well as their identity get socially approved.

Although some scholars use different terms to describe the social dimension of experiences, they still include social experience under the notion of experience. For instance, Holbrook uses the term social world while using baseball to explain people taking different roles by being part of a collective identity (Holt, 1995). Similarly, some academics categorize social dimension of experience as part of the symbolic meaning associated with consumption experience (Holbrook and Hirschman, 1982). On the other hand, some scholars divide experience into two dimensions as objective and subjective experience and group social experience as part of subjective experience (Mascarenhas *et al.,* 2006; Gentile *et al.*, 2007).

In regard to this study, the social dimension of experience could be very well associated with corporate heritage as some corporate heritage assets, organisations or brands take different role identities, which provides customers with the opportunity to feel related or satisfy their social needs during their experiences (Balmer, 2013; Burghausen and Balmer, 2014a, Balmer and Chen, 2017). Thanks to this association, this study includes relational experience with other dimensions of customer experience.

2.8. Summary

The literature review part (Chapter 2) of the study comprehensively delineates the review of relevant literature. At the beginning, the following theories; corporate heritage, social identity, and symbolic interactionism are explained to give better understanding on the canon adopted by the study. Following the related theories, the chapter continuous with the explanations of corporate identity including the dimensions constituting corporate identity. Then, corporate heritage is explained besides the notion of corporate heritage design and its dimensions. Afterwards, the chapter delves into augmented role identities including city and national role identity. Finally, the chapter concludes both customer experience and satisfaction. The next par (Chapter 3) of the research demonstrates the conceptual framework and the proposed hypotheses based on the relevant literature review.

CHAPTER 3: CONCEPTUAL FRAMEWORK DEVELOPMENT

3.1. Introduction

This chapter argues the conceptual framework that is proposed based on the relevant literature. In addition to that, the conceptual framework chapter provides details on the hypotheses pertaining to the framework. Hypotheses suggest relationships among corporate identity, augmented role identities, corporate heritage design and customer behaviour.

3.2. Hypotheses Discussion

3.2.1 Corporate Identity

Corporate identity as a notion has been attracting both scholars and practitioners for decades. The initial arguments on corporate identity were limited to visual elements. Some practitioner and researchers from academia prominently showed strong bond with corporate identity and visual elements of a corporation (Abbratt, 1989; Bernstein, 1984; Feldman, 1969; Olins, 1978; Selame and Selame, 1975). One reason behind this point of view might be the accountability of practitioners against firms in order to provide tangible and practical solutions. In addition to that, at first corporate identity was seen the sum of visual cues helping the audience to identify organisations among others. These ways of approach towards the corporate identity might explain why it was restricted with only visual elements such as logo, name, design, etc. by both practitioners and consultants (Margulies, 1970; Olins, 1978). However, after the notion was questioned more, furthers studies asserted that corporate identity cannot be explained by only visual elements even though they are quite important for organisations. Hence, it is suggested that visual identity does not constitute corporate identity only by itself since corporate identity is constructed by many elements (Baker and Balmer, 1997; Balmer, 1995; He and Balmer, 2007; Melewar and Karaosmanoglu, 2006;

Balmer, 2017). Although there are many definitions of corporate identity, it briefly means "The mix of elements which gives organisations their distinctiveness; the foundation of business identities" (Balmer, 2001; p. 254).

Corporate identity also has different explanations based on related company stakeholders. These are as follows; Actual Corporate Identity, Communicated Corporate Identity, Conceived Corporate Identity, Ideal Corporate Identity and Desired Corporate Identity (Balmer and Greyser, 2002, pp. 893-894). Although there are various types of corporate identities regarding different stakeholders, this study is concerned with conceived identity dimensions since it seeks to shed light on corporate identity from a customer point of view. Based on the literature review; the dimensions that constitute corporate identity respectively; Quality, Country of Origin, History, Positioning, which supports the first hypothesis of this research. On the other hand, it should be noted that visual elements of corporate identity are not included in this construct since one of the objectives of the study to observe continuous visual elements i.e. heritage design in detail as a mediator between customer perceptions of corporate identities and satisfaction through experience.

One of the layer of corporate identity is its quality trait as it is emphasised by scholars while defining or clarifying corporate identity (Downey, 1986; Schladermundt 1960 cited in Shee and Abratt 1989 p.68; Marvick and Fill, 1997; De Chernatony, 1999; Balmer, 2008; Simpson, 1988; Ingenhoff and Fuhrer, 2010; Kiriakidou and Millward, 1999; Abratt and Kleyn, 2012; Balmer, 2017). Quality of service or products is an important part of the corporate value (Kiriakidou and Millward; 1999), which could be one of the communication vehicles of a corporation (Balmer, 2017). Hence it has an important role in creating or maintaining the perception of organisations within the mind of customers and other stakeholders (Marvick and Fill, 1997; Cravens *et al*., 2003; Abratt and Kleyn, 2012). These positive perceptions regarding the quality trait of the corporate organisation have a positive impact on consumer behaviour (Aaker, 1996; David *et al.,* 2005; Zeithaml, 1988; Keller, 2001; Yoo *et al*., 2000; Pappu *et al*., 2005; Netemeyer *et al*., 2004; Low and Lamb, 2000).

Another dimension of corporate identity is country of origin which is defined as "the picture, the reputation, and the stereotype that consumers attach to products of a specific country" (Piron, 2000 p. 30). Some organisations use country of origin element to communicate certain characteristics of their identity (Melewar, 2003). It helps and affects the perception of the companies by different stakeholders (Keller, 1993; Balmer, 1998). In addition to that, the quality of product or services could be linked with the country of origin by customers (Kaynak and Cavuslugil, 1983; Chao, 1998). Many studies demonstrated that there is a relation between the country of origin and the customer behaviour (Elliott and Cameron, 1994; Balabanis and Diamantopoulos, 2004; Mohd Yasin *et al*., 2007; Ahmed and d'Astous, 2008).

History constitutes a significant layer of corporate identity. It is suggested that there is a strong connection between history and corporate identity (Moingen and Ramanantsoa, 1997; Balmer, 2001; Balmer and Greyser, 2006) which is also approved by practitioners in a qualitative study (Melewar and Karaosmanoglu, 2006). History could add distinctiveness to companies, and it does not demand big effort to utilize history for the companies (Zhiyan *et al*., 2013). On the other hand, some organisations chose to demonstrate real history and heritage (Beverland and Luxton, 2005), some might have a modification or create fictional history since reinterpretation could give sincerity (Beverland, *et al*., 2008; Holak *et al*., 2008; Aaker, 2004). For companies who look for differentiation point; including history and roots besides other temporal dimensions present and future should be considered since it might be important for stakeholders (Balmer, 2017). History, roots and other elements of organisations heritage might lead positive perception among customers and lead higher brand attachment (Netemeyer *et al*., 2004; Wiedmann *et al.,* 2011a; Merchant and Rose, 2013).

Corporate identity also includes the positioning of the company as it could be a tool to deliver the intention regarding where the company desire to locate itself among other firms. The relation between business identity and positioning has been expressed by many scholars (Golnick, 1985; Schmidt, 1995, Melewar, 2003; Balmer, 2008; 2017). Since market positioning could help organisations to differentiate from others, it could yield different impacts on customers (Fuchs and

Diamantopoulos, 2010). Based on the literature it is suggested that different dimensions of corporate identity constructed by different dimensions have an impact on customer behaviour. Hence the following hypothesis is proposed;

Hypothesis 1: Corporate identity has a positive relationship with the customer experience.

3.2.2 City Role Identity of London Taxi:

Like private brands cities should also address functional, symbolic and emotional needs of their stakeholders to make improvement on socially and economically (Ranisto, 2003). Besides many other factors, Transportation and infrastructure are one of the elements that contribute to building a city identity. Many scholars on city branding suggested that transportation is an important part of city identity (Karavatsix, 2004; Anholt, 2006; Evans, 2003; Merrilees, *et al.,* 2013; Parkerson and Saunders, 2005). The weak transportation system might have a negative effect on customers' attitudes and behaviour towards cities (De Carlo *et al.,* 2009; Tompsin and Schofield, 2007). On the other hand, the satisfaction of public transport users depends on many different factors including comfort, vehicle safety, accessibility and punctuality (Stuart, *et al.,* 2000; Golob, 2003; Eboli and Mazulla, 2011, de Oña *et al.,* 2013; Borgaday *et al.,* 2014).

At this point, transportation vehicles should be capable to meet the traveller needs by being up to date. However traditional London taxis carry a rich heritage, they are modern enough to meet the needs of both locals and visitors since it requires heritage assets to be up to date in order to keep sustainability. As opposed to traditional heritage view, corporate heritage assets should be innovated enough while keeping the long-lasting traits that differentiate them from others. Innovation is a significant tool since it keeps brands up to date (Aaker, 2004; 2007; Beverland, 2005b; Beverland *et al*., 2010, Keller, 2003; Weerawardena *et al*., 2006) and reflects the reinventing capabilities of the organisation (Kapferer, 2004). Within the corporate heritage context, innovation

relates to "relative invariance" which is basically "a fusion of continuity and change" (Balmer, 2011a, p. 1390). London taxis have been successfully achieving offer functional values by adopting the Transport for London requirements while preserving its unique characteristics.

While London taxis have an important role in the London transportation system (Skok, 2000), traditional London taxis have been also an icon for the city of London. Although there are architectural icons such as Big Ben, St. Pauls Church or new structures such as London Eye, Shards; London is also famous for its icons related to transportation. Roundel logo, double-decker red buses and underground map are the examples which have been able to keep distinctiveness over a long period of time and became icons. At this point, the significance of managers and decision-makers are visible to achieve that consistency regarding both in organisation and time period Balmer, 2012). Another difference of London taxi as a dynamic icon of London is that it has the potential to adapt itself based on changing needs and strategy of city management in order to revive or add new meaning to city identity. Scholars observing city icons usually overlook this type of icons and limit the phenomena with static architectural icons such as Pyramids in Cairo, Eifel Tower in Paris, Colosseum in Rome, etc. Hence, they consider city icons not having the ability to adapt to the new strategies of improving city identity and might no longer represent the city (Trueman and Cornelius, 2006). Because of the increasing air pollution cities have been looking for new solutions to solve the problem. These types of solutions could give them an opportunity to link innovation and modern meaning with the city identity. In the city of London, administrators have been working to increase air quality and make city identity more environmentally friendly (Transport Emissions Roadmap, 2014). And the %21 of CO2 emission is because of road transportation (LAEI, 2010). Based on this strategy the newest London black cabs have become more environmentally friendly by adopting electrical motors while still preserving main heritage design characteristics.

As the city branding efforts are made to differentiate cities from other cities, symbols could assist to add value to city identity to stand out from others since one of the definitions of a brand is "what differentiates you and make you

special" (Milligan, 1995, p. 39). It is suggested that city branding is "a consisted mix of brand elements to identify and distinguish a destination through positive image building" (Cai, 2002, p. 722). At this point icons and symbols play an important role as part of the symbolic value of city brands. Some scholars used icons and symbols to make further clarification on city branding and found that icons could be also be used to differentiate the cities (Tasci *et al.,* 2006). For instance; Green (*et al.,* 2003) asserted that icon could be used in specific events that appear in media and help differentiate and remind the city to the audiences. The city symbol or icon is suggested to be a material object such as Angel monument or even Volkswagen Beetle at Mexico City, which circulates through books, postcards etc. (Monnet, 2006). It is contended that there is a strong relation between city icons and the landscapes, and it should have "pictorial representation" of the city in some extend (Ethington and Schwartz, 2006, p.10).

It is suggested that some transport vehicles such as London black cab, New York yellow cab, or San Francisco street cable cars have iconic impacts and become synonymous and with the destination as they differ from past related vintage vehicles by keeping their main function of transport (Robbins, D., 2003. p. 91). Icons are also an important part of the urban landscape of London and the transformation of London landscape has been carried out from industrial to a post-industrial city by new structures and skyscrapers (Hamnett, 2003, p. 17). Although some of the iconic structures as part of daily life have changed (Kaika, 2010), London taxis have achieved to be part of it throughout the years, which made it to be part of London's landscape and value of an aesthetic quality as icons add aesthetic values to cities (Sklair, 2010). In terms of city visitors for instance; landscapes are part of their experience (Urry and Larsen, 2011). Looking from visitor's perspective, the icons could add positive belief on the customers hence it would have a positive impact on affective and cognitive experience (del Bosque and San Martín, 2008). As from experience literature, the sensory, affective and intellectual experiences are some of the main dimensions of the customer experience (Brakus *et al.,* 2009). With its functional, aesthetic and symbolic value-adding to the London, traditional London taxis are a platform to trigger those type of experiences. Hence the second Hypothesis is suggested as:

Hypothesis 2: The city role identity of London Taxis has a positive impact on customer experiences.

3.2.3 National Role Identity of London Taxi

If we look at the London taxis from a historical part, it could be suggested that it has a close link with the national, territorial and cultural identity of Britain. Heritage has social value since it could be a significant component of a social group with certain roles such as a monument, object or symbolic representation (Bessiere, 1998). Similarly; institutions after a certain period of time gain new role identities and could have cultural, territorial and temporal associations (Balmer 2011a; Balmer, 2013; Burghausen and Balmer, 2014a; Balmer and Chen, 2015). Hence it is suggested that those "heritage identities are especially meaningful in creating an identity and in nurturing identification not only with the organisation, but with other meaningful identities" (Balmer, 2011a, p. 1389). The association with Tong Ren Tang with Chinese culture and Royal family or the association with UK's brewing heritage and t Britain's oldest brewery, Shepherd Neame, could be given as an example (Balmer and Chen, 2017; Burghausen and Balmer, 2014a). As a result, customers could use those heritage assets to express or experience associated identities. This is quite significant for some customers since; in addition to a different type of experience; identification with certain identities or a certain way of life has also close relation with customer experience (Schmitt, 1999; Brakus *et al.,* 2009).

British car vehicles sometimes might symbolize the national identity of Britain, which could affect customer behaviour. In his book, Morality and Market Smith (Smith 2014 p.171) claim many customers or companies continue to use British Vehicles to support domestic production. This could also be the sign of the collective response of British people to express British Identity as they identify themselves with British organisations. At the certain time, it could be more obvious behaviour to reflect British identity via British made products, so it is asserted that "British cars are thought to be bought primarily out of patriotism..." (Hooley *et al.,* 1988). Symbolic national identities of London taxi could also be

significant not only locals but also visitors as they seek for an authentic experience. Since it represents a part of British culture, in other words, a certain way of British daily life.

Britons themselves consider traditional Black Cabs as part of British Identity. In a research conducted by a hotel among seven thousand British people, Black Cab is listed as the most iconic British vehicle in a list of things that are loved most about Britain along with The Queen, Big Ben, Shakespeare, BBC and so on (Khan, 2008). Several years after black cabs find itself again in a survey, which was conducted among British people whom 78 per cent of were proud to consider themselves British, of the top things they love about Britain British people. (Mail Online, 2014). In his book Cocco (1999) also lists London black cab as a British iconic benchmark while claiming open sports in UK are as much a British icon as Big Ben, Queen and London taxi.

The company that manufactures traditional black cabs is also aware of the vehicle's veritable significant impact and relation on British culture. They devoted a Cultural Impact part on their corporate section of the website by detailing the appearance of traditional London taxis in Hollywood movies, London Olympics ceremony and well-known British children book "Tootles the Taxi" as an illustration of London and Great Britain. (levc.com, 2017). Traditional London taxi is also described as "Uniquely British" (Bobbit, 2003) to articulate its connection with Britain. The study by Moncrieffe, and Moncrieffe, (2019) also reveals that London black cab image is used as representative of British values and British identity among primary school students.

Based on that cultural and national importance of traditional London taxis with a rich heritage, it could be suggested that they also provide authenticity to its customers. The value of authenticity could be found in a long-lasted organisation with heritage. For instance; in their empirical study Mohart (2015) and his colleagues found out that continuity contributed the authenticity perceived by the consumers and they search for authenticity which adds meaning (Beverland, 2005) and it has an impact on customer experience (Lemke wt, al. 2011). Corporate heritage studies also link the notion of authenticity with the continuity,

yet it should be noted that continuity and change should occur at the same time (Balmer, 2011; Blombäck, and Scandelius, 2013). Based on the literature mentioned above the next hypothesis is suggested:

Hypothesis 3; National role identity of traditional London taxis has a positive effect on customer experience.

3.2.4 The Moderator Effect of Heritage Design:

Brands with heritage can speak to consumers in various ways: symbols, graphics, nostalgia, packaging advertising (Ballantyne *et al*., 2006). Symbols act as a means of expressing the core values, indicating what the brand stands for (Urde *et al*., 2007). Visual symbols have more potential than words because a symbol is more ambiguous, imbued with meanings and rich in information, and at best can create an emotional bond with consumers. (Borja de Mozota, 2003). Successful brands develop a visual identity and a marketing communication process that persist and are distinctive (Borja de Mozota, 2003). A colour, for example, can become so consistently linked with a specific brand and its heritage that it acquires a secondary meaning; accordingly, companies are increasingly registering colours as trademarks (Hoek and Gendall, 2010).

Design and visual elements have been always found place itself in the corporate identity and corporate brand literature. Even at the very beginning of corporate identity works, some practitioners investigated corporate brands and linked corporate identity with only visual elements. In his book The Corporate Personality, well-known corporate identity consultant Wally Olins mainly focuses on visual elements as a means that corporate identity is manifested (Olins, 1978). On the other hand, further studies contested that even visual and design elements are very significant tools for corporate marketing objectives, they are not enough themselves to explain the corporate identity of an organisation. In other words, visual/design identity is distinctive from corporate identity and forms one layer

of the corporate identity (Balmer 1995, van Riel and Balmer 1997, Baker and Balmer 1997, Melewar and Karaosmanoglu 2006, He and Balmer 2007). Design is of significant among corporate heritage studies since it has been also expressed in some of the studies related to the emerging notion of corporate heritage. Corporate heritage design is defined as "The pursuance and continuance of certain design features vis-a` -vis products, graphic design, architecture, livery, etc. can accord an entity with heritage distinctiveness if it has prevailed over time. Also relates to the coherent visual system is in place (corporate design/house style/ visual identity)" (Balmer, 2013, p.318).

The study mentioned above (Balmer, 2013) also suggests that consistency in multi-sensory utilisation may form a corporate heritage dimension for the corporations. Based on this theory, this study proposes that multi-sensory utilization is also significant to corporate heritage design of a product that has different meanings for different stakeholders. Sensory utilization is defined as "Sound, scent, touch, vision, and taste –individually, as a combination or in their entirety can accord an entity with heritage distinctiveness if it has prevailed over time". An empirical study among managers on multi-sensory corporate identity contested the multi-sensory identity system as "the importance given to and the amalgamation of the senses that is sight, sound, scent, taste, touch (multi-sensory) by which an organization's identity manifests vis-à-vis internal and external stakeholders"(Burghausen and Balmer, 2014a, p. 2312). It should also be noted that, as the design is one of the main subjects of this study, it is asserted that there is a strong relationship between customer experience and the design at a different dimension of experience (Schmitt 1999b).

At this point, it is useful to mention symbolic interactionism since based on this theory corporate design heritage could be scrutinized among different stakeholders. Symbolic interaction theory examines society via observing the subjective meanings that are given by people to objects, behaviours or events. "Modern interpretations of symbolic interactionism are derived mainly from the works of George Herbert Mead. In addition, the historical underpinnings of symbolic interactionism can be found in Charles Horton Cooley's theory of society, John Dewey's concept of habit, and W.I. Thomas' definition of the situation (Leigh

and Gabel, 1992, p. 28)." In the same article Leigh and Gabel (1992, p. 27) contests: "Individuals are assumed to relate to objects or events based on their symbolic meaning given by society. It is a well-known fact that consumers may buy a given product for reasons other than the product's basic functional performance. People are often motivated to buy a good or service on the basis of what it represents to themselves, and to others with whom they associate or to some societal referent".

Based on the literature mentioned above, the continuous heritage design element of traditional London taxis as a communication tool for multiple identities (e.g. corporate identity, augmented role identity) could have an impact on the relation between different identities and customer experience. Hence, we propose the following hypothesis;

Hypothesis 4a) Heritage design of traditional London taxis has a moderator effect between corporate identity and customer experience.

Hypothesis 4b) Continuous design elements of traditional London taxis moderates between city role identity and customer experience.

Hypothesis 4c) Traditional London taxi's heritage design has a moderator impact between national role identity and customer experience.

3.2.5 Customer Experience and Satisfaction

Customer experience has different dimensions and it is defined as individual's evaluation of experience with product, service or brand based on the internal feelings, cognitive efforts, senses or attitudes (Brakus *et al*., 2009).

The notion of experience has been discussed by many scholars within the marketing literature. The pioneering study of Schmitt (1999a) and his theory on

experience have been adopted by many researchers. He placed his theory on the past studies that clarified the experience as the actions related to customer behaviour as well as emotions and cognitive process (Holbrook and Hirschman, 1982; Padgett and Allen, 1997). Adopting Schmitt's theory many scholars have studied the notion of experience and its significant role in an attempt to create customer satisfaction (Brakus *et al*., 2009; Iglesias *et al*., 2011).

In spite of the fact that in the experience literature the perspective on the antecedents differs from scholar to scholar, most of the studies approach with a holistic perspective by looking through a comprehensive perspective. As a result of that, customer experience includes different returns from customers such as sensory, emotional, cognitive and social (Schmitt 1999a; Gentile *et al*., 2007; Frow and Payne, 2007; Brakus *et al*., 2009; Rose *et al*., 2011; Lemon and Verhoef, 2016). Even though different studies are conducted in different contexts whether online (Rose *et al*., 2012; Simon *et al*., 2013), retailing (Kim *et al*., 2015), multiple brands (Gentile *et al*., 2007; Verhoef *et al.,* 2009; Brakus *et al*., 2009; Iglesias *et al*., 2011), or tourism (Barnes *et al*., 2014) approves the expansive point of view of customer experience by looking into different layers of it. Even though, there are many arguments on the dimensions of customer experience, the major dimensions adopted by the greater number of scholars inform the current study. Those dimensions can be listed as follows; sensory (sense), affective (feel), cognitive (think), physical (behavioural/act) and relational (social identity/relate) experiences of customers (Schmitt 1999a; Brakus *et al*., 2009).

The studies regarding the experience concluded that customer satisfaction is a consequence of customer experience. Many scholars from customer experience field demonstrated that there is a positive relationship between customer experience and customer satisfaction (Brakus *et al*., 2009; Iglesias *et al*., 2011; Nysveen *et al*., 2013; Kim *et al*., 2015). Based on the literature, this study identifies the experience as a mediator for the relations among corporate identity, the role identities and customer satisfaction. Hence the last hypothesis is:

Hypothesis 5: Customer experience has a positive impact on customer satisfaction.

Hypothesis 6: Customer experience mediates between multiple corporate identities and satisfaction.

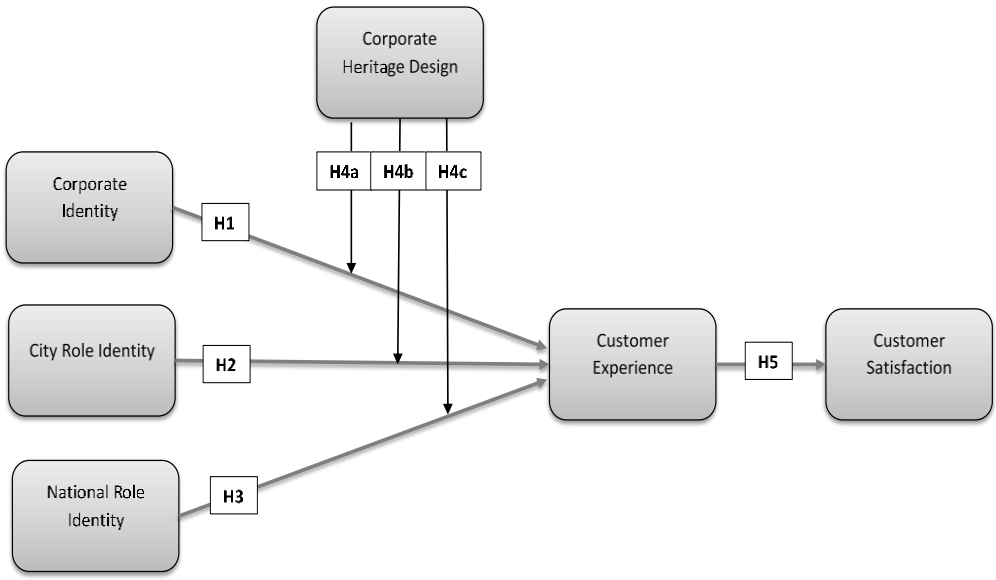

Figure 3.1: The Proposed Conceptual Framework

Following the related literature; this research has defined hypotheses to investigate the different construct and their relations. To make it clearer those proposed hypotheses are presented below.

Hypothesis 1: Corporate identity has a positive relationship with the customer experience.

Hypothesis 2: The city role identity of London Taxis has a positive impact on customer experiences.

Hypothesis 3: National role identity of traditional London taxis has a positive effect on customer experience.

Hypothesis 4a: Heritage design of traditional London taxis has a moderator effect between corporate identity and customer experience.

4b: Continuous design elements of traditional London taxis moderates between city role identity and customer experience.

4c: Traditional London taxi's heritage design has a moderator impact between national role identity and customer experience.

Hypothesis 5: Customer experience has a positive impact on customer satisfaction.

Table 3.1: Conceptual Model Dimensions, Measures and Relevant Academic References

Constructs	Definitions	Indicators and Measurement Sources
Corporate identity	The unique company identity characteristics pertain to consistency in quality, longevity on the industrial operation, the association with a certain country and the positioning in the marketplace.	Schmitt *et al.,* 1995; De Chernatony 1999; Balmer *et al.,* 2006; Aaker 1996; Yoo *et al.*, 2000; Netemeyer *et al.*, 2004; Pappu *et al.*, 2005; Wieddman *et al.*, 2011; Balmer and Chen 2015; Ind 1992; Moingeon and Ramanatsoa 19997; Balmer 1998; Melewar 2006; Netemeyer *et al*., 2004; Merchant and Rose 2013; Watson and Wright; 2000; Piron 2000; Chryssochoidis *et al*., 2007; Norjaya *et al.*, 2007; Wood 2000; Chryssochoidis *et al*., 2007; Balmer 2017
Corporate heritage design	Continuous, familiar and multitemporal design elements encapsulating functional, meaningful and aesthetical characteristics.	Balmer 2010, 2011a, 2013; Yoo *et al.*, 2000; Karjalainen 2007; Burghausen and Balmer, 2014b; Wiedmann *et al.*, 2011a; Morhart *et al.*, 2015; Urde *et al*., 2007; Balmer 2013; Bargenda 2015; Balmer and Chen 2017; Kumar and Greg 2010; Kumar *et al*., 2016; ; Golob, 2003; Eboli and Mazulla, 2011, de Oña *et al.,* 2013; Borgaday *et al.,* 2014; Khalid and Helander 2004; Wuestefeld *et al.,* 2012; Arnold and Reynolds, 2003; Kapferer and Bastien, 2012
City role identity	The extent of association between corporate heritage asset and a certain city through functional, aesthetical and symbolic features.	Laws 1995; Stuart *et al.,* 2000; Eboli and Mazulla 2011; de Ona *et al.*, 2013; Karavatsiz 2004; Trueman and Cornelius, 2006; Green *et al*., 2003; Vanolo, 2008; Sklair, 2010; Anholt, 2006; Evans, 2003; Merrilees *et al.,* 2013; Parkerson and Saunders, 2005; De Carlo *et al.,* 2009; Stuart, *et al.,* 2000; de Oña *et al.,* 2013; Borgaday *et al.,* 2014; Ethington and Schwartz, 2006; Castillo-Villar , 2016; Monnet, 2006; Favro, 2006;
National role identity	The extent of bond reflecting the relationship regarding cultural and national values between a corporate heritage asset and a nation.	Balmer, 2008b, 2011a, 2013; Burghasuen and Balmer 2014a; Wiedmann *et al*., 2011a, 2014a; Balmer and Chen 2015, 2017; Bargenda 2015;
Customer experience	The physical and cognitive customer response at the sensorial, intellectual, behavioural and social level to a product, service or a brand.	Brakus *et al*., 2009 Schmitt, 1999; Barnes *et al*., 2014; Kim *et al*., 2015; Iglesias *et al*., 2011; Brakus *et al.*, 2014; Nysveen and Pedersen, 2014; Gentile, 2007
Customer satisfaction	The difference between the customer expectations and the experience with a certain product, service or a brand.	Brakus *et al*., 2009 Schmitt, 1999; Oliver, 1980; He *et al.*, 2012;

3.3. Summary

The section (Chapter 3) above thoroughly elucidates the development of conceptual framework. Next, the proposed hypothesis reflecting the relationship between corporate identity and customer experience are presented. Following that, the chapter details the hypothesis on the relationships between augmented role identities (city role identity and national role identity) and the customer experience. Later on, the chapter proceeds with the explanation of the hypothesis representing the corporate heritage design moderator impact. Finally, the chapter ends with proposition of customer experience effect on customer satisfaction. The next section (Chapter 4) reviews the selected research approach and methods.

CHAPTER 4: METHODOLOGY

4.1. Introduction

This chapter discusses the research methodology in detail. First, to give a wider perspective on the research context, the traditional London taxi is examined in more detail. Then the chapter explains the adopted research methodology. Since the research selects the positivist deductive approach to test the conceptual model and hypotheses (Chapter 3.1), the quantitative research methods are discussed further down the chapter.

4.2. Research Context

4.2.1 Taxi Industry in London

In London, there are two main types of taxicabs as Hackney carriages and private hire vehicles

Hackney Carriage (black cabs): According to Transport for London (TFL) regulations, passengers can hail only hackney carriages (London black cab) which are licenced to take passengers on street without requiring any pre-booking. Moreover, there are set of standards (Conditions of Fitness) to evaluate whether a black cab vehicle is suitable enough to carry passengers. In addition to that black cab drivers should pass the Knowledge consisting of a hard training on memorising street and landmark names. Although for decades only the purpose-built taxi vehicles had used as black cabs, in 2008 TFL granted licence to Mercedes minivan to be used as alternative black cab vehicle. Besides the London TX models and Mercedes minivan are seen as London black cabs recently, various number of vehicle models (e.g. Metrocab) had used in the past. In traditional black cab features a spacious luggage room in passenger compartment. One of the differentiating features of traditional black cab is the manoeuvrability. There is an even an urban myth (a black cab could turn on a sixpence) to stress out the incredible manoeuvrability of black cabs. There are five passenger seats on the back including two backward-facing ones. Black cabs also provide a decent

headroom (a passenger should be able to sit on with at top hat) which makes the entry and exit of passengers easier. In addition to that, a ramp is included to increase the accessibility for disable people.

Private Hire (minicabs): Private hire vehicles started its operation in 1960s. In contrast to black cabs, private hire provides taxi service with pre-bookings. Passengers could book a private hire licenced taxi using various ways such as phone, internet, fax as well as in person at a registered minicab location. Minicabs should be book via contacting registered offices rather than contacting minicab drivers. The regulations and operations of private hire taxis in London dated to 2001. London Taxis and Private Hire (back then knows as Public Carriage Office) institution is responsible to licence the minicabs. Although London Taxis and Private Hire institution is also responsible of licencing and regulations of London black cabs, minicab drivers do not require to pass Knowledge exams to obtain a private hire licence. Instead of that, minicab drivers are asked to pass a geographical exam to earn their licence. Furthermore, similar to London black cabs, the minicabs should also meet the vehicle standards set up by London Taxi and Private Hire.

The Knowledge: The knowledge refers to the trainings and the exam process that should be executed by any potential black cab drivers known as cabbies in order to operate as a London taxicab driver. Starting in 1865, there has been very little change on the Knowledge exam process, which has been inherited from generations to generations as a rich heritage part of London taxi industry. The aim of the Knowledge is to imbued London taxi drivers with proper knowledge of London. After passing Knowledge, cabbies should be able to ride any passenger to desired destinations without using a map or as satellite-based navigation. The process includes a deep study on numberless places, landmarks, street routes set by TFL Public Carriage. The average period of process takes over thirty months including many oral exams undertaken by drivers to be qualified as a licenced cabbie.

4.2.2 The Manufacturer of London Taxis:

The London Taxi Company is the manufacturer of the iconic London Taxi namely black cabs. On their website, it is easily seen that the corporate organisation places value to their heritage as well as stakeholders both customers, passengers and the people interested in London Taxis (London-taxis.co.uk). They are exploiting that heritage and associations on their website in their communications such as "The London Taxi or Black Cab is an integral part of British history. The London Taxi Company has been part of this illustrious heritage from the very start and we are proud to be the only manufacturer in the world of this iconic and instantly recognisable, distinctly English motor vehicle." These statements demonstrate that London Taxi Company does not see London taxis as only a product for taxi service, but it is a vehicle that encapsulates corporate heritage traits inherited across generations to generations besides its associations between London Taxi and different identities.

The company later becoming manufacturer of traditional black cab was company called Carbodies founded by Robert B. Jones. He started the company to manufacture coach parts for the car companies with no facilities for coachbuilding. Carbodies are sold to the BSA group in 1954, which led the extension of production facilities. The company started manufacturing prototypes or body parts for well-known projects such as the Jaguar E-type bonnet besides providing panels for Triumph Motor Company. On the other hand, one of the significant marks in their history was manufacturing the body with the assembly pertaining to Austin FX4 taxis in 1958.

Although the company made many other contracts for different projects, after the fall on those contracts made the production of Austin FX4 more significant. This led the company to acquire the FX4 chassis assembly line from British Leyland's Adderley Park, Birmingham factory and moved it to their production place in Coventry. At this point Carbodies became the complete manufacturer of the Austin FX4 although they were produced for British Leyland Company. In 1973 Manganese Bronze holding acquired the Carbodies and attempted to produce their own taxi model FX5. On the other hand, the project abandoned later because of the development costs. After British Leyland decision

to cease the production of Austin FX4, Carbodies took the full responsibility to manufacture the model.

After becoming the complete manufacture of Austin FX4, Manganese Bronze bought Mann and Overton which had been operating as a dealer of London taxicab. In 1997, a new model of a taxicab, the TX1 was introduced. This was updated as the TXII in 2002 and in 2007 a new model TX4 was introduced. This series has established LTI Vehicles as a worldwide supplier of London-type taxis. In 2017, the company starts to manufacture hybrid taxis, namely LEVC TX, as a response to a request from London administration zero-emission strategies.

In 1998 the name Carbodies Limited was dropped and the company was renamed LTI Limited and rebranded to The London Taxi Company in Nov 2010. In recent times The London Taxi Company set up a partnership with Chinese carmaker Geely Automotive, building a factory in Shanghai to manufacture London taxis for the export market and to supply components to the home factory in Coventry. In 2010 the name Mann & Overton was dropped, and the dealership now also trades as The London Taxi Company. Then Geely change the name to London International Taxi Company. After London's new regulations on clean air requirements on black cabs, Geely initiated a hybrid model and changed London International Taxi Company name to London Electric Vehicle Company (LEVC) in 2017.

4.2.3 London Taxi Vehicle

London Taxi Company is the only manufacturer of fully accessible, purpose-built London Taxis in the world. London Taxi Company emphasizes the following design features of the latest London black cab model TX4. It is not a van conversion yet a purpose-built hackney carriage vehicle. Beautiful, sleek and instantly recognisable design ensures that customers always know that the Black Cab is a London Taxi, whether they are hailing one during the day or at night. This statement proves the mindset of an organisation that shows the awareness on the relation between Black Cab and London, which is achieved by

remaining fundamental look of black cabs rather than complete change on design.

The debate over eco-friendliness: After London's Mayor Boris Johnson stated that London needs more environmentally friendly taxis to decrease the emission causing air pollution, some car makers such as Nissan launched alternative designs to be the next London cab. On the other hand, some Londoners claimed that black cab is an iconic symbol beside it became a part of London identity. Some showed resistance against the replacement of London Taxi and commented on the news articles as: "it will make the city less British, "The London cabs are historical with their old but yet iconic look so I deeply hope they will keep them as they are or the charm of London will be gone"(Knapman, 2014). A driver says; "The old fx4 for me. Lovely to drive, roomy, safe and solid, and the customers loved it. Why not just fit it with modern mechanics?" (Massey 2014). Skapiner (2014) in an FT article contests that black cabs represent London by his statement: "…TX4, the classy, roomy traditional-style cab that says "London" to potential visitors from all over the world". In 2017 the company started to produce electric taxis as a response to London city administration request based on the zero-emission target. The new taxi model is called LEVC TX is seen on the London streets in 2018.

Although there are some studies on London taxi such as management within the taxicab service (Skok, 2000; Skok, Walter, Tissut, 2003; Skok, W. and Baird, 2005), driver's neurophysiological analysis specifically in memory (Maguire, Frackowiak, and Frith, 1997; Maguire, Woollett, and Spiers, 2006) or driver's preferences on taxi engines (Mourata *et al*., 2004) as well as official regulations on London taxi industry (Cairns, and Liston-Heyes, 1996; Beesley, 2013; Moore and Balaker, 2006). Furthermore, there are published books on history of London taxi industry (Bobbit, 1998; Bobbit, 2003; Munro, 2014). As stated before, there is a lack of study conducting research on black cabs' corporate heritage traits from customers' point of view.

4.2.4 London Taxi as a Visitor Attraction

In this section, the visitors' interests in London taxi will be explained since visitors also another stakeholder group targeted as customers in the current study.

The secondary data also exhibit that the traditional London taxi is defined as one of the tourist attractions in London. Although the current study does not separate customer as a stakeholder group, visitors also include in the customer stakeholder group. To give a better understanding, this section explains both heritage and corporate heritage tourism.

Heritage tourism as mentioned before is predominantly related to protection and presentation of tourist attractions. Some scholars studied the experience, satisfaction of heritage tourists based on the service quality of the touristic attraction (Chen and Chen, 2010). Some of the heritage studies are related to the identification of individuals with heritage sites (Palmer, 2005). Industrial heritage is also another part of heritage tourism which observes the tourism activities in industrial areas such as mines (Edwards, 1996). On the other hand, there is a lack of study to look heritage tourism regarding living organisations through the lens of corporate heritage at an institutional level which is part of corporate heritage tourism.

In addition to heritage tourism studies, another area that brings the notion of heritage and marketing discipline together is heritage marketing. It is defined as using marketing concepts for heritage sites to understand the customers' need of these areas and protect heritage to prevent anything that may obscure the process of delivering service and product (Misiura, 2006).

The concept of corporate heritage tourism is first expressed by Balmer in his comprehensive work on corporate heritage (Balmer, 2013). Corporate heritage tourism refers that various meanings and identities hold by corporate heritage institutions might be impactful on tourists or customers. They may visit these institutions in an attempt to purchase something or to visit as a tourist or to have both experiences.

Heritage tourism is "clearly identifiable places which-in historical contexts help to denote a tourist destination" (Balmer, 2013, p. 294). In contrast to heritage tourism looking for the meaning of heritage sites to visitors and dealing with protection or presentation, corporate heritage tourism interested in living organisations obtaining persistence corporate identities or meanings have been existing for multiple generations and attract tourists. In their empirical study on a Chinese pharmacy company Ton Ren Tang, Balmer and Chen (2016) validate the relationship between its augmented role identities and corporate heritage tourist attractiveness.

Even though the present study on London Taxi might not exactly meet the conditions of corporate heritage tourism based on the definition, it is proposed that products itself could also encapsulate corporate heritage traits as well as having an association with other identities. Hence the product itself becomes a tourist attraction thanks to attached corporate heritage traits. The study is placed under corporate marketing realm since the only product of London Taxi Company is London Taxi which is a prominent means that communicates corporate heritage traits. On top of that, the notion of stakeholders rather than London Taxi owners overlaps the study as the emphasis is on customers including tourists as one of the stakeholder groups London Taxi Company addresses.

Sometimes stakeholders identify with a certain institution or experience a certain culture associated with those institutions such as the USA or French citizens consuming British Culture through British Monarchy (Balmer, 2008). With its long heritage and various attractions for the visitors, London is the second most visited cities in the world after Bangkok (Millington, 2017). Visitors might come to London not only seeing the landmarks such as House of Parliament, Big Ben, Westminister Abbey etc., but some of them could keen to experience the British culture through different experiences. London taxis as part of the daily life for the centuries could help them to achieve that. The official tourism website of Great Britain besides British Pubs, Saville Road tailoring shops, includes experiencing London taxi as part and how to hail one in with a British Manner (visitbritain.com, 2017). In a similar way Storry and Childs (2016 p.39) in their book "British Cultural Identities" defines traditional London black cab as one of

the distinctive symbols for British Culture. On the other hand, it is suggested that there is not enough support to maintain the black cab, even though it is a cultural icon (Tracey, 2015). It is concluded that thanks to its augmented role identities, London black cabs attract many visitors' attention as tourist attraction of London.

4.3. Research Method

The previous section covers the research context and elaborates on the traditional London taxi. In this chapter, the purpose is to draw a framework on research philosophy, approaches and methods that are adapted to the current research. The chapter summarises different research philosophies. On the other hand, the adopted research philosophy is explained while giving the validation on the selection process which could be seen at the end of the research philosophy section.

4.3.1 Research Philosophy

First of all, as a researcher, we need to know what methodology and methods that are required to perform valid research. Clough and Nutbrown assert that Methodology is the way to validate the methods that perform as mediators between research questions and answers (Clough and Nutbrown, 2007). On the other hand, methods are the tools to investigate a research problem, to ask the right questions and to find answers for these questions.

Although throughout research history, many research paradigms have been introduced that use quantitative methods, Naturalism namely scientism is one of the prominent ones. The point of view regarding ontology (the science of being) of the naturalism is objectivism. Objectivism refers to a standpoint defending there is a cause and result relationship in everything (David and Sutton, 2011). Epistemology (the study of knowledge) is the philosophy that explains how to reach knowledge. Objectivism adopts positivism as an epistemological point of view, which argues that only empirical data could be used to generate unbiased in another name objective knowledge via neutral knowledge to test theories or

hypothesis (David and Sutton, 2011). It is an independent tool that could be exploited by researchers in describing and measuring the properties of social reality and beyond (Bryman, 2016). In other words, positivism is premised on certain principles including cause-effect relationships and facts within the social sciences. Accordingly, positivism as a quantitative approach used by researchers to increase our comprehension of human behaviours through testing theories and hypotheses (Bryman, 2016). To accomplish this, quantitative measurements and statistics such as experiments and surveys are used. It is claimed that quantitative studies are specifically used to generealise information and apply a broader scale.

Qualitative methods are preferred by one of the main research paradigms as known as social constructivism or interpretivism. Unlike the positivist approach on explaining everything via models and quantitative testing, interpretivism differs by explaining phenomena by circumstances (Collis and Hussey, 2013). Since interpretivism accepts the difference among people and objects in both social and natural sciences (Bryman and Bell, 2018), it demands to seize the subjective meaning of social science to address those differences (Collis and Hussey, 2013). As a subsequence, interpretivism suggests that there is co-creation in knowledge after people interacting with their own subject while producing their interactive dialogue (Orlikowski and Baroudi, 1991). The social constructivists attempt to understand complex subjective meanings produced by individuals without narrowing down these ideas. Using open-ended questioning produces a better understanding of individuals and interactions between individuals in their life settings. Rather than based on an initial theory, these researchers follow an inductive way to develop or produce a theory (Creswell, 2009). The ontological point of view suggests that there are multiple realities and truths. Constructivist epistemology claims knowledge is constructed in an internal way by individual unlike the positivist epistemology suggestion of reaching knowledge by external and objective methods. Focus groups, interviews and observation are some of the qualitative methods used by researchers. This makes it suitable for exploring emerging issues with an in-depth look.

Under the light of the discussion above, the current study adopts the positivist philosophy since it aims to measure a social phenomenon premised on

a conceptual model and hypotheses which requires empirical validation. First of all, from the ontological point of view, positivism is interested of reality regardless of our knowledge of it, which is the common point of view in this study since the research is concerned with the nature of reality such as the relationships between corporate heritage identities and customer behaviour even if it is beyond our awareness. Secondly, the researcher exploration of those relationships has no impact on the existence of the relationships itself (Bryman, 2016). Finally, it is suggested that the selection of philosophy by the researcher could depend on the compatibility between the research problem, the nature of research and the philosophy (Collis and Hussey, 2013). Consequently, within the current research context, positivism was considered more suitable to the research given the fact that the research focuses on empirical validation of the proposed framework and hypotheses.

4.3.2 Case Study as a Research Approach

It is suggested that a case study is one of the most convenient approaches for open to question social phenomena which requires detailed understanding because of its complexity (Yin, 2009, p.9). On the parallel, the research adapting case study gives researchers the opportunity to study social phenomena via various types of empirical methods (Yin, 2009, p. 11). Hence, it is accepted that the case study is useful to explain a phenomenon either with a single causative factor or a comprehensive knowledge formation (Stake, 2005). On the other experiment or survey could be preferred by researchers regarding the approaches adapted for the case study. Although the former approach helps the researcher to generalise the statistical data for a larger population, the latter provides a theoretical conclusion (Yin, 2009. p. 5).

The appeal of case study is because of its flexible nature that allows researchers to adopt a comprehensive understanding on complicated and many-sided phenomena (Remenyi, Williams, Money and Swartz, 1998, Gummesson, 2000; Farguhar, 2012). Therefore, the prominence of the case study increased among social scientists including business and management (Remenyi *et al*., 1998;

Gumesson, 2000; Farguhar, 2012). This made the case study to be preferred by business or management researchers who have generated some of the pioneering studies in their areas (Gibb and Wilkins, 1991, Eisenhart and Graebner, 2007). Since the case study approach on a social phenomenon comparatively independent from qualitative and quantitative methods because of its nature (Gerring, 2007, p. 17), the methods regarding conceptual and or empirical research is dependent on which point of view selected by the researcher in terms of research paradigm (Stake, 2005). There is two different case study approaches as a single case or multiple case studies (Stake, 2005; Gerring, 2007; Yin, 2009). Although a single case study represents the instance scrutiny of one case, multiple case studies refer the two or more studies mostly for comparison purposes on a social phenomenon (Gerring, 2007).

Hence the notion of corporate heritage has been an emerging subject, the single case method was chosen based on the exploratory nature of the research. Although the single case study might acquire limitation in regard to the generalisation of the results; it might be used as a tool in the modification of existing generalisations (Stake, 1995). On the other hand, both the reliability and effectiveness of single case study have been expressed by many scholars throughout the research history (Normann, 1970; Yin 1994).

It is significant to remind that this study mainly places itself under the field of corporate heritage and the single case method have been utilised for the emerging subject of corporate heritage. Following the fact that single case study have been popular among the scholars who have been conducting research in the field of corporate heritage (Balmer 2011; Hudson, 2011; Burghausen and Balmer 2014, 2015; Urde and Greyser, 2015; Rindell *et al.*, 2015; Bargenda, 2015; Santos *et al.*, 2016; Balmer and Chen, 2017; Maier and Andersen, 2017), the current research also adopted the single case study method.

Since the heritage design and its perception was one of the main subjects of the research, the dominant continuous design elements of traditional London taxi was one of the reasons behind its selection as the main case. In addition to that the associated meanings with a corporate heritage assets, which is defined as

role identities, are also significant part of the research since corporate heritage studies have been placed importance on the subject of different role identities (Balmer 2011; Balmer 2013; Burghausen and Balmer 2014; Bargenda 2015; Balmer and Chen 2017; Schroeder *et al*., 2017). Initial research revealed that traditional black cabs have the potential to provide a platform to answer those research questions. All these factors mentioned assisted researcher to select traditional London taxi as the subject case of the current study.

4.3.3 Preliminary Research with Secondary Data

Since the current research relates to a specific single case, preliminary research was needed in order to identify certain subjects related to traditional London taxis. At the beginning of the literature review, the main question was the moderating effect of Heritage design between Perceived Corporate Identity and Customer Behaviour. On the other hand, emerging corporate heritage studies revealed that corporate heritage assets could become associated with other social identities (Balmer 2013) such as a culture of nation (Brenda, 2015), a region (Burghausen and Balmer, 2014a) or even it could be even linked to imperial identity (Balmer and Chen, 2017). In some studies, it is shown that customer perception of those associated identities namely role identities have a positive impact on customer behaviour (Balmer and Chen, 2017). However, it should be noted that every corporate heritage organisation or heritage assets acquire role identities unique to themselves after a certain period. In the preliminary research ample amount of secondary resources were put into scrutiny. Those resources include related documents such as the website of LEVC (The manufacturer of traditional London taxis), some academic journals, websites of newspapers, Facebook pages, website forums and so on. The preliminary analysis covered not only the published texts related to traditional London taxis but also the comments made by the customers since the study is about the perception of customers. Based on the preliminary research analysis, specific role identities of traditional London taxi were revealed. Those augmented role identities are defined as city role identity and national role identities. Hence the second research question (Chapter 1) were revisited and answered through the preliminary research analysis.

Many Londoners consider that black cab is an iconic symbol and an intertwined part of London city identity. After the debate on the replacement of London black cab with other taxi vehicles, some member of the public claim that London would be less British besides making London less charming (Knapman, 2014). Some also suggest keeping traditional London cabs with a new technological update. Skapiner (2014) in an FT article contests that black cabs represent London by his statement: "…TX4, the classy, roomy traditional-style cab that says "London" to potential visitors from all over the world". In 2017, the London Taxi Company successfully updated its vehicles after the requirement of less emission taxi vehicles set by London administrator to reach a zero-emission level in London. The new taxi model is called LEVC TX is seen on the London streets in 2018.

Joe Kerr from the Royal College of Art (RCA) emphasizes that the black cab is still as much a symbol of London as it is a vehicle besides part of London landscape like red busses by stating; "It is utterly recognisable. It's like a British telephone box. You cannot separate a black cab from people's identity of London." (Jackson, 2005). To express the strong relationship between the city identity of London and traditional London taxis Bobbit states that: "Traditionally black, frequently red. Sometimes blue, green or multi-coloured, it is as much as part of London as Big Ben, Piccadilly Circus, Tower Bridge and Trafalgar Square. Uniquely British- but as familiar to the capital's millions of visitors as it is to Londoners- without it the City would be all the poorer. It is the London taxicab." (Bobbit, 1998 cited in Skok, 2000, p. 225).

While there was a discussion of whether London Black Cabs should be replaced with other vehicles or not, a former conservative politician Richard Tracey called for a step from the related establishments to not replace London black cabs since along with red buses, black cabs are one of the most recognizable transport icons in the word (Tracey, 2015). In addition to that, he emphasizes the significance of black cabs for Londoners by mentioning London Black cabs was

chosen as the most iconic transport design in a poll conducted by Transport for London.

While literature, history, art, architecture and many other cultural related icons might be used to convey the given social identity, some brands with accorded role identities are also examples of icons that communicate national or cultural identity like the traditional London taxi. During the discussions of the black cab being possible ceased because of financial struggle, in her article journalist Cathy Newman elucidates the strong relation between English, British identity and the traditional black cab as a British Icon by claiming "To the relief of Anglophiles, the British-as-tea-and-scones London black cab has been saved from extinction." (Newman, 2013).

Countries use different symbols to represent the territorial identity since those symbols could be associated with their territorial identity as part of their national identity. For instance; the Olympic Games could be utilized to express or build territorial identity by using symbols that represent the nation. China, in 2008 The Beijing Olympics Opening Ceremony, used important cultural symbols and inventions to demonstrate Chinese national and territorial identity (Zhiyan *et al*., 2013 p. 92). Although those symbols could be generic such as inventions or flag, some of the organisations and their products could also be utilized as a symbol of a nation. A notable example of this the usage of traditional London cabs during 2012 The London Olympics Opening ceremony. The study by Moncrieffe, and Moncrieffe, (2019) also reveals that London black cab image is used as representative of British values and British identity among primary school students.

The preliminary research was used to define only the unique role identities of traditional London taxis. As stated in the definition of directed content analysis it benefited from a theory called corporate heritage role identity (Balmer, 2013). According to this Balmer theory "some heritage institutions are meaningful in territorial (associations with a city, region or country), cultural (the values of a nation, region or city or of a class, profession, etc.) and ancestral (the familial dimension in terms of multi-generational ownership of a firm and multi-

generational loyalty to a company as customers, suppliers, investors, etc.) and, absolutely critically, in institutional terms (what a company makes, stands for, etc.)."(Balmer, 2013, p. 297). In light of this theory, the secondary data part of the current study defined the different identities which have been linked to traditional London taxi defined as city role identity and national role identity.

4.3.4 Quantitative Method

The research survey method for the proposed theoretical framework was selected in order to test the relationship among corporate identities, role identities, and heritage design and customer behaviour including customer experience and customer satisfaction. The theoretical framework was established through both literature review as well as secondary data within the preliminary research process. The reason behind that makes research survey as a reasonable quantitative method measuring data regarding certain population is because of its efficiency, accuracy as well as convenience in terms of time usage (Zikmund *et al*., 2013). On the other hand, it is beneficial to clear the difference between survey research and the survey itself since there has been an argument among researchers in terms of differences. The way of collecting data such as opinion, characteristic or action regarding either an individual or a group of people is basically called survey (Tanur, 1982), which is mostly is a component of survey researches. On the other hand, survey research is described as the type of survey to reach advance knowledge in an academic way (Pinsonneault and Kraemer, 1993). Hence, in order to seek and advance knowledge in certain subjects, survey research is used. There are three common features that have been asserted by academics (Pinsonneault and Kraemer, 1993; Fowler, 1993) on survey research as following; design of questionnaire survey which aims to provide a description of certain characteristics of a subject and/or population. Secondly, the data collection via a limited number of structured questions for participants. Lastly, the data information which is collected to make a generalization over a population by using a survey in a small part of the population called a sample.

Pinsonneault and Kramer (1993), as well as Creswell (1994), also add that in an intend to scrutinize a research phenomenon, variables called dependent and independent as well as the anticipated relation between them are identified in order to test those relations. They also suggest that survey research is appropriate if:

1- The initial questions to test a certain phenomenon are what, how much, how many following the questions of what and how for the clarification purpose.

2- It is not likely to have controllable or desirable independent and dependent variables.

3- The research phenomena is required to be scrutinized in its natural environment.

4- The research phenomena is necessarily scrutinized at the present time or close past.

The current research aims to reveal the relations between hypothetical concepts after creating appropriate measures to test the proposed hypotheses via survey research. There are six standards regarding survey research to validate the construct created by the researcher as Bagozzi (1980 p. 114) defines those standards on construct validity as "theoretical meaningfulness of concepts, observational meaningfulness of concepts, the internal consistency of operationalization's, convergent validity, discriminant validity, and finally nomological validity". The current research will follow Bagozzi's model in order to test the relations among the proposed constructs.

There are four major components to manage survey research as research design, sampling procedures, data collection and data analysis methods, which are useful in determining the quality regarding survey research (Dillman, 1978; Fowler, 1993). Those components are defined as:

1- Research Design: It is "a plan and structure of investigation so conceived as to obtain answers to research questions" (Kumar, 2011, P94). A good research

design is the one that includes certain factors such as the overall frame of research to identify and clarify control of variables as well as the time in which the research is conducted.

2- Sampling Procedure: Whether large or small, identification of certain segment of the population in order to perform generalization for either bigger fragment of population or the total population regarding the research phenomenon (Pinsonneault and Kraemer, 1993).

3- Data Collection: The methods that are used to collect the survey for the research (Pinsonneault and Kraemer, 1993). There are various ways of spreading the survey such as face-to-face interviews, telephone interviews or mailing the survey to the sample (Fowler, 1993). Hence the way of collecting data has an impact on both quality and cost of data, the researcher should be careful in the selection of data collection methods.

4- Data Analysis: The appropriate way of translation and formation of collected data from the surveys to make it suitable for analysis and the analysis process of the stored data by using various tools such as statistical software or any other application which is designed to analyse data in order to reach the intended results (Fowler, 2013). At this point, it is suggested that the data analysis process should be addressed in a meticulous way since it has an impact on the quality of research (Cooper and Emory, 1995). In summary, the reasons mentioned above and the nature of the study, the research adopts the positivist approach with deductive and quantitative methods.

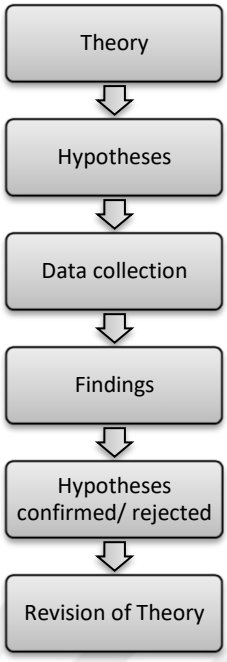

Figure 4.1: The Stages of Deductive Approach Bryman and Bell (2011, p.11)

4.3.5 Sample Selection

In order to determine the sample within the population of case study, the method of convenience sampling will be used to reach out to the participants who are members of certain webpages that cover the research subject. Based on the return rate of initial data collection, handing out surveys on the popular London streets and squares will be preferred if it is required to reach the intended amount of data. The reason to use convey sampling method is because of it is efficiency to reach the sample which is formed by survey participants (McDaniel and Gates, 2012).

The current research is intended to use online pages (such as Londonist Facebook page) with the over millions of members who are interested in events, attractions or any other London related subject. The initial analysis revealed that these sites have had covered the news or posts related to traditional London taxis and received a certain number of comments in return. Hence, considering the size

of the pages and the members' interest in traditional London taxis, the webpages are selected to reach the survey participants. On the other hand, McDaniel and Gates, (2012) suggest that convenience sampling is effective if the research subject is considered within the low-incidence rate. Although the traditional London cab is covered in webpages, the interaction and the comments were low comparing the number of members. Another concern is to find the individuals who have actually used and experienced traditional black cabs rather than just expressing their thoughts on the subjects. Hence this leads the researcher to select the convenience sampling method to collect data in an efficient way as suggested by the previous researchers.

4.3.6 Survey Design

There are various ways of survey collection to acquire the first-hand data from the intended sample of survey participants. The way of collecting data is restricted by the research purpose as well as the resources available to conduct the research. There are several ways of research survey in order to achieve data collection. From the point of the quantitative method, there are different types of surveys as systematic observation techniques, like an online survey, mail survey, in-person interview, and phone interviews, which will be explained below.

1- Observations: It refers to the observation of a phenomenon watching or listening both systematically and selectively. In this method, as the time of an event occurs regarding the phenomena the researcher records the observation. On the other hand, the participant/s are called passive participants since there is no interaction or communication with the researcher. In opposite of that, the rest of the survey types requires communication and interaction to generate the data, so they show active participation in the data collection (Parasuraman *et al*., 1986).

2- In-person/ Face to face interviews: The way of survey methods is more suitable in order to gather a deeper and detailed understanding of participants on a more complicated subjects; which is often provides more response rate and acceptance among participants. However, there are some certain disadvantages to this type of survey as it takes more time and budget. In addition to that in a certain

situation, it limits the quality of data based on the clarity of the questionnaire (Smith, 2003; Sekaran, 2000).

3- Phone Interviews: It is suggested that this type of survey is both economic and confidential since the identity of the researcher and the participant often do not reveal their identity. Although phone interviews do not require much effort, it has some flaws since it is less controllable, low response rate and the short amount of time to communicate with the participant (Kerlinger, 1986; Tull and Hawkins, 1990).

4- Mail Surveys: Mail survey is the way which the surveys spread participants via mails, which makes it easier compared to another type of survey types. It has many advantages over face to face interviews such as low administration fee and accessibility to the sample in an easier way. On the other hand, it might provide lower response rate, uncompleted or prejudiced data comparing to face to face interviews which give the researcher the opportunity on clarification of questionnaire to receive higher response rate (Kumar, 2014; Seale, 2004; Saunders *et al.*, 2016; Fowler, 2008).

5- Electronic Surveys: This type of survey has grabbed attention and become more popular after the advancement of technologies (Lazar and Preece, 1999). Many scholars have claimed that electronic surveys require very low budget comparing other types of surveys to reach out the participants (Sheehan and Hoy, 1999; Weible and Wallace, 1998) besides providing the opportunity to gather more data by reaching out larger sample within the research population (Couper, 2000). However, this large scale of the sample causes less control on participant involvement in return provides a lower response rate (Watt, 1999; Couper, 2000). Besides the low response rate; electronic survey method has superiority over another type of surveys in terms of speed of the distribution and response cycle (Yun and Trumbo, 2000; Swoboda, *et al*., 1997).

As it is explained previously in the sampling part the researcher preferred the electronic survey method to collect the data. Regarding the gathering data via electronic surveys; there are two ways. The first way is to reach participants by sending a questionnaire via e-mail, which is called an e-mail survey (Kiesler and

Sproull, 1986). The second way is called web-based/ online survey using the web to spread the questionnaire (Pitkow and Kehoe; 1996) via technological devices such as tablets, personal computers or kiosks. Since e-mail survey causes the researcher to store and translate data in a manual way, web-based/ online surveys are easier as it allows the researcher to store and translate data in an electronic way by using certain software (Easterby-Smith, 1997; Pitkow and Kehoe, 1996; McCoy and Marks, 2001). Online surveys are preferable because of their low cost and the easy way that does not requires companies or researcher to use Survey Companies (Dillman, 2000). The operational definitions and the sources of measurements used in the survey are mentioned in conceptual framework development (Chapter 3).

4.3.7 Methods for Data Analysis

In this section the methods that will be implemented to perform analysis of data which will be gathered by a survey among participants. The researcher intends to follow the data analysis model suggested by Bagozzi (1980) and benefit from multiple statistical techniques to achieve the end result. Some of those techniques are; descriptive statistics, factor analysis, correlation analysis, reliability and validity test, regression analysis and finally structural equation modelling via the statistical software called SPSS AMOS.

4.3.7.1 Descriptive Analysis

It is suggested that researchers could get a brief visual explanation via descriptive analysis after the test on both central tendency and the dispersion of variables of the research (Sekaran, 2000; Sekeran and Bougie, 2016). To figure out the way of response given by the participants regarding research items, many various factors such as the variance, the mean, and standard deviation could be used as part of descriptive analysis. In addition to that descriptive analysis assists

researchers to find the degree of strength of both items and measures used in the study.

4.3.7.2 Factor Analysis

Scholars have suggested that factor analysis is a method that is used to reduce the data by decreasing a big number of variables to a smaller number (Coakes and Steed, 2003). Factor analysis as a data analysis method is" used when the researcher has some knowledge of the underlying latent variable structure. Based on the knowledge of the theory, empirical research, or both, he or she postulates relations between the observed measures and the underlying factors a priori and then tests this hypothesized structure statistically" (Byrne, 2001, P.6). Whilst factor analysis helps the researcher to reduce the unnecessary variables, it makes an increase regarding the goodness of data (Stevens, 2012).

4.3.7.3 Correlation Analysis

As one of the aims of the research is to find out the relation between two variables, correlation analysis is a way to test those relations and their power as well as strength (Cohen *et al*., 1990). If the relations between variables are strong, correlation coefficient (named r) is one of a most effective tools to test that relation and it is accepted as a quantitative method of bivariate analysis which also used to test the relation between two variables. Another tool called the Pearson product-moment correlation coefficient is used to control if the variables are associated in a linear way. Correlation analysis and related tools are used to figure out the relations within each construct in order to identify if the data and relations are fit for or good enough for the following analysis.

4.3.7.4 Reliability and Validity Test

In order to test the quality of the collected data researchers might need to use the tests of reliability such as with Cronbach's alpha and validity such as convergent and discriminant validity. In order to reveal the complete correlation of a group of items with each other, Cronbach's alpha is used as a reliability coefficient. On the other hand, there are certain standards and benchmarks of Cronbach's alpha to reach reliability regarding each item. It is accepted that while the optimum value for Cronbach's alpha α is near to 1.0, to confirm the reliability Cronbach's α must be higher than 0.7 (Kline, 2013; George and Mallery, 2003; DeVellis, 2016). In terms of validity, convergent and discriminant validity that could be used as a secondary type of construct validity, are the tools to figure out the difference and the covenant level among the indicators of different constructs as the indicators are suggested to test the constructs (Bagozzi and Yi, 2012). Additionally, it is required to examine the correlation of measures evaluating the variables associated with the construct in order to test the validity of a construct (Johnson *et al.,* 2007) since different measures should be correlated in high level. Finally, the correlations mentioned this part is needed to anticipate the expected patterns as proof of construct validity (Myers and Sweeney, 2008).

4.3.7.5 Regression Analysis

Regression analysis as part of the quantitative has been used as one of the main techniques to test the proposed hypotheses. Hence this research aims to adopt this technique to do so. It is asserted that regression analysis is a method to generate an equation for the measured variable to one or more predictor variables (Churchill and Iacobucci, 2006). There are two types of regression analysis called simple and multi regression. Since this study scrutinizes more than one expected result over various predictors multi regression will be implemented as it is more appropriate to manage it (Field, 2005). To decrease the squared perpendicular space between the data points and line, the best fit line which is a straight line fitting the data best is used to explain algebraically with regression equation to

reveal the relation between two variables. There are two elements that construct regression line as the slope/ the line/ gradient (β1) and the point where the straight line crosses the vertical axis in the graph (the intercept of the line β0). The equation that reflects the regression line is:

$$Yí = (\beta 0 + \beta 1\ Xí) + Ɛí.$$

A brief explanation of the equation will be made by detailing the symbols in the equation. The Y represents the response variable or dependent variable which is the outcome of the calculation. On the other hand, β0 is the Yí intercept and Xí reflects the predictor variable, explanatory variable or independent variable which shows the respondent's score on the predictor variable. β1 is the slope of the straight line (regression line) and Both β0 and β1 are called regression coefficients. Lastly, the difference between the regression line predicted scores for each participant í and obtained scores for each participant í is represented by Ɛí. In addition to that, the position of the relation is represented by the gradient of the regression line which shows positive gradient value if the relation between variables are positive while negative gradient line means there is a negative relation between the variables.

4.3.7.6 Structural Equation Model (SEM) Testing

In this research, the multi regression analysis is considered to be used to test the research model. In some proposed research frameworks, some variables could be dependent variable (such as customer experience in this research when observing various corporate identities) or independent variable (customer experience when observing customer satisfaction) and take the role of mediator variable (Gerdin and Greve, 2004). At this point, the path analysis could be used by the researcher as a solution to get the desired results and strength the complexity of regression analysis. In order to figure out both the direct and the indirect consequence of independent variable over dependant variable path analysis is used (Wright 1960). Path analysis also provides to test multiple relations between variables if a variable takes the role of both dependent and

independent variable in different observations. However, since path analysis presumes a unidirectional stream of relationships between variables (Maruyama, 1997), the mutual relations between variables are not possible to differentiate from one and other. Another disadvantage of path analysis is that it cannot give the coefficient of variables in order to obtain approximate measurement error for each independent.

Teo and Khine (2009) simply explain structural equation modelling (SEM) as a statistical method which gives researchers the opportunity to simultaneously test a chain of organized equations. When a variable play both roles of dependent and independent variable (or mediator) in different equations, structural equation modelling is used to solve those equations (Hair *et al*., 1998; 2010; Kaplan, 2008; Smith and Langfield-Smith, 2004). Being functional in the confirmatory analysis comparing exploratory analysis, structural equation modelling is preferred by many researchers from social science to test casual relations between variables (Recker, 2012). Additionally, it helps to reduce the restrictions and limitations related to path analysis and multiple regression analysis.

According to Smith and Langfield-Smith (2004, P. 50), there are many advantages of SEM comparing both path analysis and multi regression analysis. They assert that there is no limit in examined several types of relation in SEM, its allows to a range of relations to be recognised in the analysis, while if SEM compared to multiple regression analysis, the difference clear that Multi regression analysis deal with one dependent variable and a number of independent variables. Also, SEM can test relation either recursive or non-recursive. So, one of the main advantages of SEM that it can interoperate with other multivariate models (Hershberger, 2003, P.44). SEM allows the researcher to adopt a more holistic approach to the research model. The level of prediction and explanation can still be estimated with both multiple regression analysis and path analysis. In addition to that, the hypothesis can still test by the assessment of the significance of the path constants. The reasonable use of a range of measures can provide a basic evaluation of the whole research model to the researcher.

One of the most important differences between SEM and both path analysis and multiple regression analysis is that SEM is able to estimate the measurement error of latent variables. This is most pertinent to the research when complex measures are used to measure constructs. Using some interaction terms in multiple regression analysis can raise this problem. Interaction terms in multiple regression analysis can include significant measurement error, especially when used with composite variables. This can direct to prejudice in the estimation of coefficients of interaction terms and can damage significance tests (Jaccard and Wan, 1996).

4.4. Ethical Considerations

As people have become more sensitive about their privacy, the resistance has increased on sharing their opinions regarding the data which is required by researchers to conduct their study. Some researchers argue that the research process has the potential to result in ethical issues unless integrity and the openness embraced in research (Cunliffe and Alcadipani, 2016). On top of that, researchers have the responsibility to protect the participant by considering how the research might impact them besides looking for ways to prevent those impacts (Oliver and Eales, 2008). Hence, the academic world including official regulators and educational institutions firmed up their policies and put ethical codes into consideration before allowing a researcher to initiate a study. At this point, the question is what ethics refer within the world of research. Ethics is described as a code of conduct and research ethics that are shaped by principles and moral values referring the ways how researchers conduct a study as well as report the results (Collis and Hussey, 2013). Some authors stressed out the significance of being ethical in any sort of research (Henn *et al*., 2005). In the same vein, there are some rules and regulations should be followed during a study, which is basically called ethical considerations. Some of the ethical consideration could be listed as taking participants consent to involve them as volunteers in the research, preventing participants from any sort of damage or distress, and giving participants the authority to be treated anonymously and confidentially (Collis and Hussey, 2013).

Some academics added the applicability of research results to the society as one of the ethical issues on top of the consent of the participant and their right to decease participation at any stage of research involvement (Henn *et al*., 2005).

4.5. Summary

The methodology part (Chapter 4) of the study goes over the relevant research approach and the research methods. At the beginning of this chapter, the research context pertaining to traditional London taxi is demonstrated. Then the chapter continuous with discussing commonly used research philosophies while explaining the reason behind the adopted research philosophy and research approach. Next, the chapter elaborates the methods in regard with data collection. Following that, the chapter goes through the explanation of data analysis methods. Final part of the chapter gives explanation on the ethical concerns and the steps taken based on these concerns. The next section (Chapter 5) of the research discusses the analysis of collected data as well as demonstration of the hypotheses testing.

CHAPTER 5: DATA ANALYSIS AND RESULTS

5.1. Introduction

Data analysis and results chapter reveals the results and the analysis in regard to the quantitative study as it constitutes the main part of the research. As it was discussed before in Chapter 4 the quantitative study includes data collection via online surveys. The chapter starts with providing information on sample selection as well as data collection. Then it continuous with the details of preliminary data analysis before the main analysis. The chapter concludes with the reliability, exploratory, confirmatory and validity analysis pertaining to the model.

5.2. Sample and Data Collection

5.2.1 Pilot Study

The process of quantitative part of the study initiated through conducting pilot testing to test and precise the questionnaire before the main data collection. In order to collect data researchers should assess the questionnaire since it is significant to detect the appropriate questions measuring the constructs stated on the proposed conceptual model. One of the reasons to conduct the pilot test is to prevent participants experiencing any confusion or feeling unease with the questions while checking if the questions are reliable enough to test the proposed conceptual model (Bryman and Bell, 2011). Furthermore, pilot testing is used for clarification of the questions, improvement of wording to reach a certain fluency level, and making sure the questions are on the acceptable reliability and validity range (Saunders *et al*., 2012). The validation process includes acquiring expert opinions to identify if the questions are representative and suitable regarding the corresponding constructs. However, reliability process refers to retainment of consistency pertaining responses to questions (Saunders *et al*., 2012). Although the current study mostly adopts the existing questions from the literature, the city role identity construct consists newly produced questions based on the related literature. In addition to that questions

tested by previous scholars are adopted to the case study of traditional London taxi. Given the reasons mentioned above, a pilot study was conducted before the main data collection. First the questions are discussed with three experts in the area of corporate heritage including a professor, a senior lecturer and a lecturer for representativeness of the questionnaire. Furthermore, to improve the clarification the researched received help from a native colleague as well as another two researchers. Following that, a pilot survey testing was performed with the 97 participants who are graduate students Brunel University London through both e-mail and face to face survey collection methods. The researcher received feedback from the participants regarding the layout and clarity of questions participants attending pilot testing. Based on those feedbacks, the researcher revised and improved the questionnaire. Then in order to reach internal consistency, both reliability and exploratory factor analysis were conducted on SPSS. According Hinton (et al., 2004) Cronbach's alpha test could be used to test the reliability of the questions. He suggests that alpha value of ≤0.90 shows excellent reliability, 0.70-0.90 shows high reliability, 0.50-0.70 shows moderate reliability, and ≤0.50 shows low reliability. Exploratory factor analysis results could be seen in section 5.4.1. The items established and adopted from the literature review are shown in the table below.

Table 5.1: Pre-Established Items Adopted from the Existing Literature

CORPORATE IDENTITY		Related literature
Quality	Traditional LONDON TAXI VEHICLE; 1. looks like it is produced to a high standard. 2. means using good quality taxi. 3. provides high quality taxi ride. 4. is one of the best among taxis. 5. is very reliable. 6. has consistent quality.	Downey, 1986; Balmer 2008,2017; Balmer and Greyser 2002, 2006; Abratt and Kelyn 2012, Kiriakidou and Millward 1999; De Chernatory 1999; Rowden 2017; Marvick and Fill 1997; Aaker 1996; Keller 2001; Yoo et al. 2000; Netemeyer et al. 2004.
History	Traditional LONDON TAXI; 1. has a long history. 2. has been around for a long time. 3. has a rich history. 4. has managed to survive the tough times as well as good times. 5. I think it will survive in the future.	Moingeon and Ramanantsoa, 1997; Balmer, 1998, 2001, 2017; Abratt and Kleyn 2012; Melewar and Karaosmanoglu, 2006; Balmer and Greyse, 2006; Urde et al. 2007; Netemeyer et al. 2004; Merchant and Rose 2013; Lehman et al. 2008.
Country of Origin	The country (UK) from which London Taxi originates; 1. is innovative in manufacturing. 2. has high level of technology. 3. is good on designing. 4. is creative in its workmanship. 5. has high quality in its workmanship. 6. is prestigious country. 7. has an image of advanced country	Dowling 1993; Melewar, 2003; Piron, 2000; Avison, 1997; Balmer and Greyser, 2002; Keller, 1993; Balmer, 1998; Balabanis and Diamantopoulos , 2004, Mohd Yasin et al., 2007; Elliott and Cameron 1994; Ahmed and d'Astous, 2008; Watson and Wright, 2000, Cordell, 1992; Norjaya et al, 2007.
Market Positioning	Traditional LONDON TAXI; 1. is unique comparing to other taxis. 2. stands out from other competing taxis.	Golnick 1985; Balmer 1998, 2001 2008, 2017; Melewar, 2003; Balmer and Greyser 2006; Schmidt, 1995; Fuchs and Diamantopoulos, 2010; Grey and Balmer, 1998; Urde et al. 2007;

	3. is different than other taxis because of its long history and heritage. 4. is different from other taxis because of its traditional design. 5. is different from other taxis because it is an icon. 6. is unique because it is the only purpose-built taxi.	Balmer et al, 2006; Aaker 1996; Lehmann et al. 2008.
NATIONAL ROLE IDENTITY (NO DIMENSIONS)	Traditional London Taxi; 1. is part of British culture. 2. has a strong cultural meaning. 3. is a British National Treasure. 4. is an important part of British Identity.	Balmer, 2011, 2013; Balmer and Chen, 2015, 2017; Bargenda, 2015; Easthope, 2004; Williams, 2001; Storry and Childs 2016; Keller, 1993; Balmer and Chen, 2015, 2017; Burghausen and Balmer, 2014a; Stanfield, 1992; Jeremiah, 2007; Zhiyan et al., 2013; Wiedmann et al, 2011a.
CITY ROLE IDENTITY		
Functional	Traditional London Taxi; 1. arrives at the destination on time 2. is clean enough to travel with. 3. has enough space to travel with. 4. is safe to travel with. 5. easy to get on and off	Rainisto, 2003; Kavaratzis, 2004; Anholt, 2006; Evans, 2003; Merrilees, et, al., 2013; Parkerson and Saunders, 2005; Stuart, et, al., 2000; Golob, 2003; Eboli and Mazulla, 2011, de Oña et, al., 2013; Borgaday et, al., 2014.
Symbolic	Traditional London Taxi; 1. is an important icon of London. 2. represents London. 3. reminds me of London when I see it. 4. always makes me remember London when I see it. 5. seen on London souvenirs, postcards, films, books…etc.	Karavatsiz 2004; Ethington and Schwartz 2006; Trueman and Cornelius 2006; Nick Ferrari 2016; Castillo-Villar, 2016; Favro, D., 2006.
Appeal	Traditional London Taxi; 1. makes London more unique.	Trueman and Cornelius 2006; Vetter , 1985; Green et al., 2003; Vanolo, A., 2008; Laws 1995; Suh

	2. helps London to differentiate from other cities. 3. makes London more distinctive. 4. makes London more attractive. 5. makes London attractive by adding aesthetic value.	and Gartner, 2004; Sklair, L., 2010.
CORPORATE HERITAGE DESIGN		
Familiarity	1. I know what London Taxi looks like. 2. I can recognize London Taxi among other competing taxis. 3. I am aware of London Taxi appearance. 4. Some design characteristics of London Taxi come to my mind quickly. 5. My familiarity with the design of London Taxi is very high.	Abratt, 1989; Yoo 2000; Karjalainen, 2007; Khalid and Helander, 2004; Balmer, 2011a, 2012, 2013; Burhausen and Balmer 2014a; Wiedman et al. 2011b; Wuestefeld et, al. 2012; Nueno and Quelch, 1998; Oknokwo, 2007; McCoy cited in Crilly et al. 2004; Lehmann et al, 2008.
Continuity	Traditional London Taxi design; 1. survives times. 2. survives trends. 3. is timeless. 4. has been protected well	Urde et, al. 2007; Wiedmann et al., 2011a; Mohart et al., 2011, Balmer, 2011a; 2012, 2013; Mohart 2015; Blombäck, and Scandelius, 2013; Rindell 2015.
Functionality	London Taxis are designed; 1. to easily get on and off. 2. accessible for elderly and disabled people 3. to have enough room for customers and their luggage. 4. comfortable enough to travel with. 5. fast enough for a taxi ride. 6. safe enough to travel with.	Aaker, 2004; 2007; Beverland, 2005b; Beverland et al., 2010, Keller, 2003; Weerawardena et al., 2006; Balmer, 2011a, 2013; Urde et, al. 2007; Karjalainen, 2007; Davis et al 2005.
Aesthetic	Traditional London Taxi design;	Beardsley, M.C., 1973; Creusen and Schoormans, J.P., 2005;

	1. gives me pleasure. 2. is appealing to me because of its curves and lines. 3. is attractive. 4. is aesthetically pleasing.	Mathwicket al., 2001; Kumar and Noble 2016.
CUSTOMER EXPERIENCE		
Sensory	1. London Taxi makes strong impression on my visual sense and other senses. 2. I find London Taxi interesting in a sensory way. 3. The sound of London Taxi does not affect me. 4. London Taxi stimulates my sense of sight. 5. London Taxi triggers my sense of touch. 6. London Taxi has strong effect on my sense of smell.	Schmitt 1999; Balmer 2011; Burghausen and Balmer 2014; Brakus et al, 2009; Chen et, al., 2014; Barnes et al. ,2014.
Affective	1. I enjoy my travel when I ride a London Taxi. 2. It is great to ride London Taxi to travel. 3. I feel happy when I use London Taxi to travel. 4. Traveling with London Taxi puts me in a good mood. 5. I have positive feelings when I use London Taxi.	Schmitt 1999; Balmer 2011; Burghausen and Balmer 2014; Brakus et al, 2009; Barnes et al. ,2014.
Intellectual	Traditional London taxis; 1. makes me think. 2. stimulates my curiosity and problem solving. 3. intrigues me and gets my attention.	Schmitt 1999; Brakus et al, 2009; Rose et al, 2011; 2012; Beckman et al, 2013; Barnes et al., 2014; Zarantonello and Schmitt 2010; Nysveen et al., 2013; Iglesias et al., 2011.
Behavioural	1. I engage in physical actions and behaviours	Brakus et al., 2009; Barnes et al., 2014; Nysveen et al., 2013.

	when I use traditional London taxi. 2. Traditional London taxis results in bodily experiences. 3. This brand is not action oriented.	
Social	When I use Traditional London Taxi I feel like I am part of; 1. An exclusive community. 2. London taxi family. 3. London Community. 4. London City. 5. I don't feel left alone.	Schmitt 1999; Nysveen et al; 2013; Nysveen and Pedersen 2014; Gentile 2007; Brakus et al, 2009.
CUSTOMER SATISFACTION (NO DIMENSIONS)	1. I am satisfied with my decision to use London Taxi. 2. My choice to ride London Taxi was a wise one. 3. I am very pleased with London Taxi. 4. I think I did the right thing when I decided to ride a London Taxi. 5. I am satisfied with London Taxi and its performance. 6. I am completely satisfied with London Taxi.	Oliver 1980; Brakus et al, 2009; He et al, 2012.

5.2.2 Main Data Collection

As it was mentioned in the earlier section, current research scrutinises traditional London taxis, also known as black cabs, and its multiple identities including corporate identity and role identities. The target sample of the quantitative study was traditional London taxi users including locals and visitors. To collect the required data in order to test the proposed hypothesis and conceptual model, online survey technique was chosen by the researcher. The survey was posted on the certain webpages containing content related to the research subject, London taxi to reach out target sample within the population by using a convenience sample. Convenience sampling is preferred since it is efficient as survey participants form the sample (McDaniel and Gates, 2012).

Although some of the webpages were directly linked to the research topic such as London transport museum Facebook Page, other online pages cover the content related to London whether events, or attractions, some having over millions of members (e.a. Londonist, Timeout London, Visit London Facebook pages) were also used in favour of attaining the required sample size . The initial analysis of the online pages also showed that London taxi news or post were shared as content, which brought comments by the members. For this reason, these online sources were chosen because of the size of pages and members' interest in the research subject. However, the ratio of comments within the pages was low when it is compared to the number of members. In addition to that, one of the concerns was to reach customers who experienced traditional London taxis. This was led to use convenience sampling which is effective when the research topic is seen within the low-incidence rate (McDaniel and Gates, 2012).

After ending the data collection process, the completed number of the survey was 556 with 138 partial surveys which make 694 in total between June-July 2018. After removing outliers 523 number of surveys were left to use in the analysis. Since the proposed model and hypothesis are analysed in SEM, larger sample required (Comrey and Lee, 1992; Hair *et al*., 2010). The way of data collection gave the opportunity to receive some feedback from the participants, which explained the uncompleted survey as many participants expressed the length of the survey was quite long.

5.2.2.1 Guidance and limitation of participation

Based on the section 4.4. Etchical Consideration All the participants were provided with the required information about the object of the research as well as why there are needed to participate in the research. Participants were also informed that they have the right to involve in the research voluntarily besides having the right to withdraw at any stage of the survey completion process by adding the following explanation in the very beginning of the survey; "You can decide to take a part of this study or refuse, you are free to withdraw at any time you feel didn't need to continue. The researcher describes for you the research study purpose and what your part in this study before you start to fill out the questionnaire".

In addition to that, they were given the reassurance of confidentiality and anonymity in order to protect the data provided by them. The study followed the rules and regulations provided by the Brunel University Research Ethics Committee. The guidelines published by the university research ethics committee require researchers to fill the necessary forms in order to explain the research and the ethical considerations written on the consent form would be given to target participants prior to research. After reviewing the documents and the ethic form signed by the researcher and the researcher's assigned supervisor, the committee gives approval that allows the researcher to initiate data collection from the target participants. It is significant to state that this research was conducted after receiving the approval from the Brunel University Research Ethics Committee. While conducting research, no personal information was asked in order to keep anonymity among participants. Moreover, all the data collected through surveys were kept confidential.

Although online survey online surveys are easier as it allows the researcher to store and translate data in an electronic way by using certain software (Easterby-Smith, 1997; Pitkow and Kehoe, 1996; McCoy and Marks, 2001), On the other hand, it might provide lower response rate, uncompleted or prejudiced data comparing to face to face interviews which give the researcher the opportunity on clarification of questionnaire to receive higher response rate (Kumar, 2014; Seale, 2004; Saunders *et al.*, 2016; Fowler, 2008). Apart from the nature of online survey

tool, the sample in this research also might include other limitations. It should be noted that there is a rivalry between traditional London taxi drivers and the competitors such as Uber. In the recent years black cab drivers have made many requests from authorities to ban Uber as they claim Uber lacking many regulations such as a comprehensive training of its drivers. On the other hand, Uber drivers have been defending themselves as they are less privileged than black cabs since they can not be hailed by passengers as they need to be booked through online platforms. This situation could be seen on online platforms through the accusations of each other as well as expressing negative comments regarding their rivals. The initial research on the case study also shows that online platforms could be used by taxi users to purposefully articulate their positive traits more often in the comments section. Another limitation might be the passengers or Londoners such as cyclists who have had negative experiences with the traditional London taxis. Some of the bikers for instance; articulating negative opinions on how some cabbies are not careful while sharing the road with the cyclists while many tourists tend to make positive comments after their experience with black cabs. On the other hand this study chose online survey methods since many scholars states that electronic surveys require very low budget comparing other types of surveys to reach out the participants (Sheehan and Hoy, 1999; Weible and Wallace, 1998) besides providing the opportunity to gather more data by reaching out larger sample within the research population (Couper, 2000).

5.2.2.2 Data Collection Sources

The final stage of the main data collection conducted in 2018, June and July. In order to collect data from the main sample the first step was to define the possible websites that include target audience who used traditional black cabs. After defining those websites, some of the many were chosen as they are active as well as having higher followers and interactions within their platform. Convenient sampling technique is used because of its efficient nature (McDaniel and Gates, 2012). Online surveys were targeted the social media webpages (some of them with over a million members) having direct (e.g. London Transport Museum Facebook Page), or indirect (e.g. Londonist, Timeout London, Visit London

Facebook, Twitter and Instagram pages) relationship with the traditional London taxi as they share London taxi related posts and topics. The initial analysis of online pages reveals that London Taxi news or posts were shared as a content leading interaction and comments from the members. The targeted webpages were chosen based on the number of pages and member's interest in the research subject. The research reached out to 694 people in total while the number of the completed survey was 556. As it is suggested that the proposed model and hypotheses' analyses require large samples to use the SEM method (Hair *et al*., 2010). It should be also noted that the researcher has contacted the page administirators through Facebook messenger and received grants to post within the visitor post section as well as under the main posts related to the research subject such as the posts covering new electrical black cab model. Although Facebook pages of the targeted sources were the main data sources, twitter as well as Instagram were also benefited to spread the survey links by using hashtags of the names of main data sources as they are also active within those social media platforms. Main sources used to reach the target audience are shown below.

Table 5.2: Main Data Collection Sources

Visit London Facebook Page	https://www.facebook.com/visitlondon/ (18 February 2018)	Visitors, residents.	Active. It has over 1.2 million followers on Facebook.
Time Out London Facebook Page	https://www.facebook.com/TimeOutLondon/ 19 February 2018	Visitors, residents, tourists.	Active with over 1.3 million followers.
Londonist Facebook page	https://www.facebook.com/londonistcom/ 22 February 2018	Locals, visitors, residents.	Active. There is almost 850.000 followers of the page.
Secret London Facebook Page	https://www.facebook.com/SecretLDN/ 27 February 2018	Locals and visitors who are interested in London life.	Facebook page has over 1.1 million followers. ACTIVE
Transport for London Facebook Page	https://www.facebook.com/transportforlondon/ 23 February 2018	Commuters of London.	Active with over 420.000 followers.
Covent Garden London Facebook Page	https://www.facebook.com/CoventGardenLDN/ 27 February 2018	Locals and visitors.	Facebook page has over 200.000 followers. ACTIVE

London Transport Museum Facebook Page	https://www.facebook.com/ltmuseum/ 23 February 2018	Transport enthusiasts.	Facebook page has over 55.000 followers.

5.3. Preliminary Analysis

The preparative analysis refers to the analysis conducted before the main analysis based on the collected data. According to Hair and colleagues (2010), the data set might pose possible infractions in regard to assumptions and multivariate analysis. Hence this section will be looking those infractions to eliminate via different analysis techniques such as missing value, outliers and so on.

5.3.1 Missing Value

It is suggested that researchers face the missing value problem while entering data, which should be solved for the sake of data analysis in Structural Equation Modelling program (Hair *et al.*, 2010). For this reason, the collected data was screened in order to figure out possible missing values. Since partial surveys were not considered to be used in the data analysis process, they were removed from the data set while entering data in IBM SPSS software. Hence there was no missing value in the main data set before the main analysis.

5.3.2 Outliers

The possibility of outliers is more likely within the large data sets like the current data set used by the researcher with the number of 556 completed responses. Outliers are defined as the data which differ from others within a data set, contain outer values and cause abnormality and misrepresentation of data as well as statistical analysis (Hair *et al.*, 2010). In an attempt to detect outliers, the

standard scores were used (Field, 2005) and the number of responses was reduced to 523 from 556.

5.3.3 Normality

It is suggested that the data set should be checked by descriptive statistics; Skewness and Kurtosis in order to test if the data is normally distributed (Kline, 2011). The data is considered normally distributed if both Skewness and Kurtosis values are zero (George and Malary, 2016). The symmetry of data distribution is represented by Skewness. On the other hand, whether the data is distributed either too peak or too flat is shown by Kurtosis. Although the acceptable value range has been argued among scholars, both Hair (*et al.*, 2010) and Bryne (2010) suggest that the data is normal if skewness is between -2 to +2 and kurtosis is between -7 to +7. Based on their assumption the data in the research is considered normal after Skewness and Kurtosis analysis which can be seen in Table 5.3 below.

Table 5.3: Skewness and Kurtosis Values

Variables	N	Mean	Median	Skewness	Kurtosis
CORPORATE IDENTITY	**523**	**4.21**	**4.24**	**-1.204**	**3.177**
Quality	523	4.10	4.00	-.999	1.912
History	523	4.37	4.40	-.505	1.117
Market Positioning	523	4.39	4.50	-1.223	3.290
Country of Origin	523	4.10	4.00	-1.217	3.682
NATIONAL ROLE IDENTITY	**523**	**4.19**	**4.10**	**-.552**	**2.722**
CITY ROLE IDENTITY	**523**	**4.45**	**4.53**	**-1.446**	**3.159**
Functional	523	4.23	4.00	-.307	.723
Symbolic	523	4.64	4.80	-1.522	2.672
Appeal	523	4.46	4.60	-1.831	4.646
CORPORATE HERITAGE DESIGN	**523**	**4.27**	**4.24**	**-1.008**	**3.402**
Familiarity	523	4.47	4.40	-.549	.106
Continuity	523	4.27	4.20	-1.109	4.132
Aesthetic	523	4.10	4.14	-1.484	5.026
Functionality	523	4.24	4.16	-.721	1.863
EXPERIENCE	**523**	**3.62**	**3.60**	**-.572**	**1.736**
Sensory	523	3.14	3.33	-.125	-.955
Affection	523	3.89	4.00	-1.190	3.529
Social	523	3.79	4.00	-1.232	2.243
SATISFACTION	**523**	**4.16**	**4.16**	**-1.667**	**4.909**

5.3.4 Demographic Characteristics of the Sample

Table 5.4 below explains the demographic characteristics of survey respondents as well as explain the frequencies and percentage.

Table 5.4: Demographics Features of the Sample

Respondents demographic characteristics		
	Results (Frequency)	Results (Percent)
Age Group		
Under 18	10	2%
18 - 24 Years	91	17%
25 - 34 Years	256	48%
35 - 54 Years	137	27%
Over 55 Years	29	6%
Gender		
Male	272	52%
Female	251	48%
The Number of Usages		
once	32	6%
2 - 5	128	24%
6- 10	114	22%
More than 10	249	48%
Income Level		
Less than 12,999	79	15%
13,000 - 25,999	228	44%
26,000 - 47,999	167	32%
48,000 - 63,999	35	6%
over 64,000	14	3%
Education Level		
High school	87	17%
Bachelor's Degree	242	46%
Master's Degree	142	28%
PhD	49	9%
Others	3	1%

According to the demographic profile of survey participants shown in the table above (Table 5.4), most of the respondents are over 24 years old by 81%. The data shows that most of the participants hold a higher education degree by 83% and used the traditional London taxi at least 6 times which forms 70% of the participants. In terms of income level, 41% is considered as a middle and upper class which is understandable as preliminary research before the data collection imposed low-income level group prefer more economic taxi services.

The cross-tabulation analysis (Table 5.5) between income and the number of taxi usage shows that the main users of traditional London cab are middle-class customers. Based on the results, the most frequent users with usage of more than 10 are the ones with the income level between 26K- 47.99K GBP (%21). On the other hand, based on the total usage, the group of customers with an income level between 13K- 25.99K GBP forms the biggest part of the sample (%43).

Table 5.5: The Cross Tabulation Between Income and The Number of Usages

	Income					
	Less Than 12,999	13,000 - 25,999	26,000 - 47,999	48,000 - 63,999	64,000 or more	Total
Usage 1	16	14	2	0	0	32
2-5	35	71	19	1	2	128
6-10	7	69	35	2	1	114
More than 10	21	74	111	32	11	249
Total	79	228	167	35	14	523

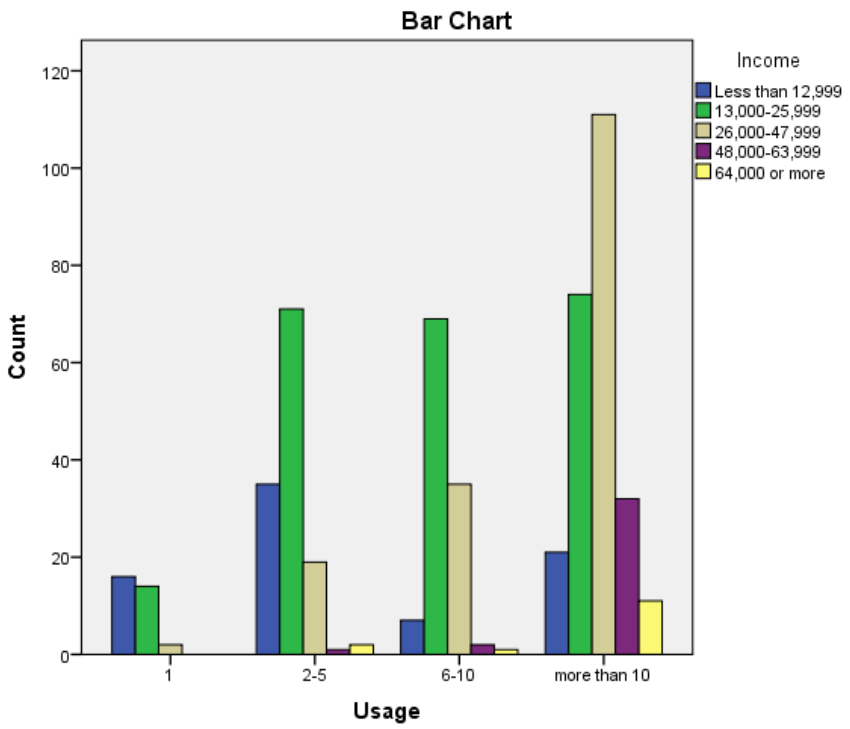

Figure 5.1: Relation Between Income and the Number of Usages

5.3.5 Frequency Analysis

Corporate Identity

The unique characteristics which make an organisation stand out among others to show the identity of a company. In this research corporate identity are pose a significance within the proposed model in order to test its impact on customer satisfaction via their experience. The notion of corporate identity is more appropriate to the case of traditional London taxi since the companies with different brand names have been the manufacturers. Although brand names have changed, the unique features of traditional London taxis have been carried out throughout the years. Most of the survey respondents agreed on the dimensions; quality, history, country of origin and market positioning. All these dimensions defined the corporate identity of the traditional London taxi.

Corporate Identity/ Quality

Based on the survey responses, 61 % of the survey participants strongly agreed that traditional London taxis are produced to a high standard as well as represent good quality, which reflects the companies claim on the ongoing quality of the iconic London taxis throughout the years. However, 7.5 % of the customers who took the survey disagreed on that London black cabs are one of the best among taxis. On the other hand, 61 % of the customers participating in the survey agreed on the reliability and the consistency of the London taxis.

Corporate Identity/ History

The participants of the survey showed that history is a very important part of the corporate identity regarding traditional London taxis. According to the initial analysis, traditional black cabs are well-known for its long-lasting history. In addition to that, the current manufacturer of the traditional London taxis also emphasises on the history of the traditional London cabs. Most of the customers taking the survey also agreed on this point. According to survey feedback from the customers, 98 % of the respondents agree on the long history of traditional London taxis.

Corporate Identity/ Market Positioning

One of the dimensions constructing corporate identity was the market positioning of the traditional London taxis among other taxis. Traditional black cabs differ from other taxis with different features such as long history and is an icon of London. The participants also gave similar answers on this matter. Based on the feedback from survey participants, 84 % of the customers agree on that traditional London taxis are unique comparing other taxis.

Corporate Identity/ Country of Origin

One of the significant features of traditional London taxis is that they have been built in Coventry, the United Kingdom since the beginning. Country of origin is a significant feature of London taxis as it has been also stressed out by the current manufacturer of traditional black cabs. The country manufacturing products have an important effect on the customers. According to survey participants, the origin of the traditional London taxi reflects the perception of technology and design features. Based on the survey respondents 65 % agreed on that high level of technology whereas 37 % strongly agreed on the advanced design in the United Kingdom.

City Role Identity/ Functional

Customers participating in the survey mostly agreed on various role identities of traditional London taxi in regard to the city of London. One of these main roles is to help customers travelling within/ around London in a secure and convenient way. According to participant responses, 87 % of customers agreed on the punctuation of traditional London taxis. On the other hand, more than 93 % agreed that traditional black cabs are safe enough to travel around. In addition to that, more than 38 % of the customers agreed on the easiness of the getting in and out of traditional London taxis.

City Role Identity/ Symbolic

Another important role identity of traditional London taxi is being associated with the city of London. Traditional black cabs have been accepted as one of the well-known icons of London. Most of the survey participants also agreed on the same subject. According to customer responses slightly more than 63 % strongly agreed with that traditional London taxis represent the city of London besides 68 % strongly agreed on traditional black cabs remind them of the city of London. Additionally, 74 % of the survey respondents showed strong agreement on that they have seen traditional London taxis on London related materials such as books, souvenirs, films and so on.

City Role Identity/ Appeal

Although London has been attracting many people, there are many icons or attractions helping London to appeal to those people. Traditional London taxi as an icon of London is one of them, which was agreed on by the survey participants. Based on the survey answers, 94 % agreed that traditional London taxi makes London more unique besides that 63 % strongly agreed that traditional black cabs helps London on attractiveness level. 50 % of the customers also strongly agreed that London taxis add aesthetic value to the city of London.

National Role Identity

Although traditional London taxis are an important icon for the city of London, it is association transcends the city limit of London since it also has a strong link with the British Nation and British culture. Initial research also showed that the London Taxi Company also emphasises on this subject to exhibit the link between traditional London taxis and British culture. According to feedback from survey respondents, 93 % of the customers agreed that there is a relation between traditional London taxis and British culture. On the other hand, 85 % of the survey participants showed agreement on that traditional London taxi is one of the national treasures of Britain.

Corporate Heritage Design/ Familiarity

One of the survey sections was about heritage design-construct which has familiarity dimension. Most of the survey participants agreed that familiarity is one of the important layers of heritage design. According to survey responses, 98 % of the customers accept that they know the look of traditional London taxis. On the other hand, 55 % of the survey participants strongly agreed that they can recognize traditional black cabs among other competing taxis. Most of the customers by 98 % agreed that they are aware of the London Taxi appearance.

Corporate Heritage Design/ Continuity

Heritage design also requires continuous design elements throughout time. Traditional London taxi acquires those sort of design elements that have been continued till today even after each new model. This is also accepted by the customers participating in the research. Based on the survey results, more than 90 % of the customers agreed that traditional black cab design survives trends, and this makes it timeless. In addition to that 91 % of the survey respondents agreed that traditional London taxi design has been protected well.

Corporate Heritage Design/ Aesthetic

The aesthetic side of traditional London taxi design is also part of its heritage design aspects like any design construct. If we look at the survey results, most of the customers like the design of traditional black cab. According to survey responses, 85 % of the participants find London taxi design attractive because of its curves and lines. Besides that, 91 % of customers think that traditional black cab design is attractive to them and 27 % strongly agreed on that traditional London taxi design is aesthetically pleasing.

Corporate Heritage Design/ Functionality

Although aesthetic aspects are significant in any design, functionality is also quite important to satisfy the basic needs of customers. Based on the feedback from survey participants, traditional London taxi is designed to be functional to satisfy customer needs. Based on the responses to functionality questions, 92 % of the customers think that traditional black cab is designed comfortable and safe enough to travel with. On top of that, 88 % of the survey participants agreed that traditional London taxis is designed to fast enough to carry passengers.

Customer Experience/ Sensory

Customer experience also has different dimensions which were tested by the current research survey. Based on the survey results, half of the survey

participants find the traditional London taxi interesting in a sensory way. In regard to senses, customers also agreed by the 79 % on that traditional black cab stimulates their sense of sight. On the other hand, only 36 % of the respondents think that traditional London taxi design triggers their sense of touch.

Customer Experience/ Affection

Customers also have emotional responses while experiencing any product or service. The research included a section to test the affectional part of customer experience construct regarding their experience with traditional London taxis. According to survey results; 87 % of the customers agreed that they enjoy their travel while riding a traditional black cab. On the other hand, 76 % of survey respondents agreed that they feel happy when they use traditional London taxi to travel.

Customer Experience/ Social

Another dimension of customer experience is social dimension which shows how a product or service satisfy social needs. The survey related to the social dimension of customer experience of traditional London taxi showed that traditional black cab meets the social needs of certain customers. If we look at the survey results, 67 % of the survey participants think that they are part of an exclusive community. On the other hand, 79 % of the customers consider themselves as part of the London taxi family. In addition to that 74 % of the survey respondents agreed that they don't feel left alone when they use a traditional London taxi.

Customer Satisfaction

All companies seek to improve customer satisfaction after their experience with any product or service. Customers make a comparison between their expectation and the real experience to figure out their satisfaction level. Hence, customer satisfaction is a significant section of the research. According to survey

feedback, 91 % of the customers are satisfied with their decision to use traditional London taxi. However, 89 % of the survey participants agreed that they are very pleased with traditional black cab as well as thinking that they did the right thing when they decided to use one. Finally, 51 % of the customers using traditional London taxi are completely satisfied with the black cab.

5.3.6 Reliability Assessment

According to Bryman and Bell (2011) reliability refers to the consistency of a measure in regard to a concept. There are three main ways to assess the reliability of a measure as; internal reliability, inter-observer consistency and stability. In order to comprehend the reliability of a measurement over a certain time period, stability is the toot used by researchers. Bryman and Bell (2011) suggest that the same measurements are required to give the same results in two different times. On the other hand, inter-observer consistency is seen when there is not enough inconsistency because of different observers. However, if different indicators show consistency and relation to each other, internal reliability occurs (Bryman and Bell, 2011). In accordance with the common usage (Churchill, 1979) this study also used internal reliability since it acquires multiple measurements and it requires consistency. Whilst the use of factor analysis in research, the most common internal reliability values for multiple indicators is Cronbach's alpha (Hair *et al*., 2014; Bryman and Bell, 2011). In general; if Cronbach's alpha values subsequently represent, ≤0.50, low reliability, between 0.50 and 0.70 moderate reliability, between 0.70 and 0.90 high reliability and ≤0.90 shows excellent reliability (Hair *et al*., 2010).

On the other hand, some scholars state the within a construct Cronbach's alpha shows high sensitivity to the items number (Nunnally and Bernstein, 1994) as based on the increasing number of items Cronbach's alpha values might also increase. Hence, if the Cronbach's alpha value is 0.60 or 0.5, it is accepted in research (Hair *et al*., 2014; Nunnally and Bernstein, 1994). Cronbach's alpha values in regard to each construct could be seen below the table 5.6 as all the constructs show acceptable Cronbach's alpha values.

Table 5.6: Cronbach`s Coefficient Alpha for Each Construct

Construct	Items	Cronbach`s Alpha	Type
Corporate Identity			
CIQUAL	6	.931	High Reliability
CIHIS	5	.816	
CIMPO	6	.885	
CICOO	7	.885	
City Role Identity			
CRFUN	5	.837	High Reliability
CRISYM	5	.891	
CRIAPP	5	.934	
National Role Identity			
NRNAT	3	.816	High Reliability
Corporate Heritage Design			
CHDFAM	5	.908	High Reliability
CHDCON	5	.882	
CHDAES	7	.893	
CHDFUN	6	.870	
Customer Experience			
EXPSEN	6	.868	High Reliability
EXPAFF	5	.817	
EXPSOC	5	.862	
Satisfaction	6	.941	Excellent Reliability

5.3.7 KMO and Bartlett's Test of Sphericity

It is suggested that researchers should perform KMO and Bartlett's test in order to assess the suitability of the data to the confirmatory factor analysis (Hinton *et al.*, 2014). Whilst Bartlett's test of sphericity is executed for confirmation on the relations between variables, KMO test is performed to figure out if the sample is adequate enough for correlation (Hair *et al.*, 2014). It is recommended that KMO tests should show values between 0.5 and 1.0 (Hilton *et al.*, 2014). It is accepted excellent if KMO test result exhibits closeness to 1.0 while less than 0.5 refers that factor analysis cannot be applied to the data set (Kaiser, 1974). On the other hand, if Bartlett's test of sphericity has p-value lower than 0.05, factor analysis can be applied to the data set (Hair *et al.*, 2010). Table 5.7 below exhibits the values of KMO and Bartlett's test of sphericity regarding the data set used in the current research.

Table 5.7: KMO and Bartlett`s Test of Sphericity

Test		Value
Kaiser-Meyer-Olkin Measure of Sampling Adequacy		0.887
Bartlett's Test of Sphericity	Approx. Chi-Square	1788.859
	Df	15
	Sig.	0

5.4. Quantitative Data Analysis

5.4.1 Exploratory Factor Analysis

As stated in the methodology section of the research, factor analysis is required in order to reduce the size of variables as well as detecting the indicator variables considered as highly correlated. In addition to that, it is suggested factor analysis helps to increase the data level of goodness (Hair *et al.*, 2010; Stevens, 2012). In addition to that exploratory factor analysis assists researchers whether the scales acquire construct validity or not. According to Kerlinger (1986) to test the discriminant validity, factor analysis could be exploited by the researchers. The commonly accepted range of the commonalities of variables is 0.5 since to have a reliable data set the commonality should be higher than 0.5. There are different ways to execute factor analysis subsequently; principal factor analysis and principal component analysis. In this study; principal component analysis is used to reduce a large number of variables into a smaller and meaningful size. After conducting exploratory factor Analysis on the results of pilot study (see Chapter 5.2.) via IBM SPSS 23; items deleted if the factor loading is below 0.5 and if factor loading on more than two or more factors. As a result, both behavioural and intellectual dimensions of customer experience construct removed.

Pattern Matrix[a]

	Component																
	1	2	3	4	5	6	7	8	9	10	11	12	13	14	15	16	17
CRI-Ico3	0.839																
CRI-Ico4	0.793																
CRI-Ico5	0.793																
CRI-Ico2	0.764																
HD-Con4		0.759															
HD-Con1		0.603															
HD-Con3		0.602															
CI-Qua5			0.880														
CI-Qua1			0.877														
CI-Qua3			0.818														
CI-Qua4			0.775														
TRI-Nat4				0.796													
TRI-Nat1				0.760													
TRI-Nat2				0.607													
SAT3					0.832												
SAT4					0.815												
SAT2					0.796												
SAT5					0.784												
SAT1					0.771												
SAT6					0.589												
HD-Fam5						0.841											
HD-Fam1						0.837											
HD-Fam2						0.823											
HD-Fam3						0.805											

EXP-Aff4							0.950										
EXP-Aff3							0.801										
EXP-Aff1							0.659										
EXP-Aff6							0.608										
EXP-Sen2								0.864									
EXP-Sen5								0.845									
EXP-Sen1								0.828									
EXP-Sen3								0.717									
CI-Coo7									0.804								
CI-Coo5									0.715								
CI-Coo3									0.680								
CI-Coo4									0.587								
CI-Coo2									0.545								
CI-Mpo5										0.787							
CI-Mpo1										0.724							
CI-Mpo3										0.720							
CI-Mpo6										0.638							
HD-Fun4											0.763						
HD-Fun2											0.717						
HD-Fun5											0.644						
HD-Fun6											0.584						
EXP-Soc4												0.820					
EXP-Soc1												0.753					
EXP-Soc5												0.721					
EXP-Soc3												0.719					
CRI-Fun4														0.783			
CRI-Fun5														0.753			

CRI-Fun2														0.713			
CRI-Fun1														0.706			
CI-His2															0.808		
CI-His1															0.761		
HD-Aes3																0.750	
HD-Aes2																0.726	
HD-Aes4																0.680	
CRI-App3																	0.790
CRI-App2																	0.745
CRI-App4																	0.695
CRI-App1																	0.638

Extraction Method: Principal Component Analysis.
Rotation Method: Promax with Kaiser Normalization.
Rotation converged in 10 iterations.

5.4.2 Confirmatory Factor Analysis

In order to conduct confirmatory factor analysis, IBM SPSS AMOS 25.0 was used. Hair (*et al.*, 2010) suggest that researchers should check at least four of the seven goodness of fit indices which are; Chi-square (χ2) to the degree of freedom (Df), goodness of fit index (GFI), adjusted goodness of fit index (AGFI), incremental fit index (IFI), Tucker-Lewis index (TLI), comparative fit index (CFI) and root mean square error of approximation (RMSEA). Based on that the researcher conducted confirmatory factor analysis and the results can be seen below the table 5.8.

Table 5.8: Goodness of Fit Indices

Model Fit Indices	Recommended Criteria	Default Model
χ2/df	1:3	2.106
GFI	≥ 0.90	.808
AGFI	≥ 0.80	.783
IFI	≥ 0.90	.913
TLI	≥ 0.90	.904
CFI	≥ 0.90	.913
RMSEA	<.80	.046

The confirmatory factor analysis shown above exhibits a good for the model measurement. Chi-square (χ2) to the degree of freedom (Df) is between the accepted level as it is 2.084. On the other hand, goodness of fit index (GFI) 0.798, and adjusted goodness of fit index (AGFI) 0.773 are both slightly under the recommended level. However, incremental fit index (IFI) 0.910, Tucker-Lewis index (TLI) 0.901, comparative fit index (CFI) 0.909 and root mean square error of approximation (RMSEA) 0.46 are all at meet the required criteria. Hence based on these results, the model meets the 5 of the 7 required goodness of fitness indices and confirms a validity (Hair *et al.*, 2010).

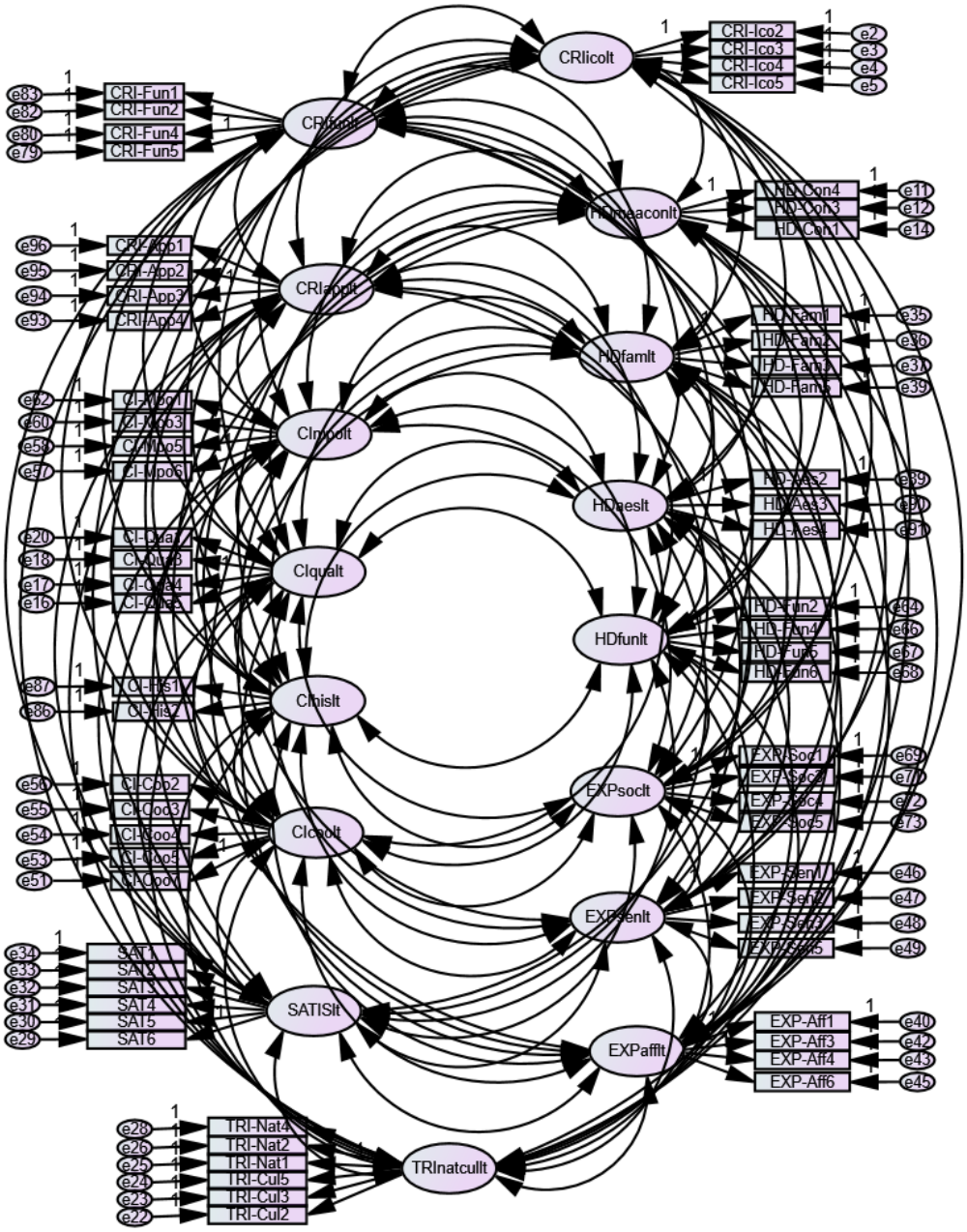

Figure 5.2: Confirmatory Factor Analysis (CFA)

5.4.3 Construct Validity

Another validity tool that is used by the researchers adopting quantitative research is called construct validity. Construct validity is accepted as a significant means to assessment and evaluation of confirmatory factor analysis (Hair *et al*., 2010). It is significance comes from the fact that it assists researchers to detect the accuracy in measurement of the related concept (Bell *et al*., 2018). Convergent validity and discriminant validity are two common validity types to reach the construct validity. Convergent validity basically refers to highly proportioned variance among the indicators measuring the same construct as well as the relation level among the measures (Hair *et al*., 2010). Composite reliability and average variance extracted are used to test convergent validity. Composite reliability is benefited to show internal consistency, which should be higher than the accepted minimum level of 0.70 (Nunnally and Bernstein, 1994). On the other hand, the total amount of variance shown by a construct in regard with the measurement error is tested by Average Variance Extracted value, which should be higher than the accepted value of 0.50 (Bagozzi and Yi, 1981). CR and AVE value of each variable could be seen in the table below, **Table 5.9**.

Table 5.9: Convergent Validity

Constructs	Items	CR	AVE
Corporate Identity			
Quality	Qual1	0.891	0.673
	Qual3		
	Qual4		
	Qual5		
Market Positioning	Mpo1	0.841	0.569
	Mpo3		
	Mpo5		
	Mpo6		
History	His1	0.828	0.706
	His2		
Country of Origin	Coo2	0.859	0.550
	Coo3		
	Coo4		
	Coo5		
	Coo7		
National Role Identity			
	Nat1	0.865	0.517
	Nat2		
	Nat4		
City Role Identity			
Functional	Fun1	0.828	0.548
	Fun2		
	Fun4		
	Fun5		
Symbolic	Ico2	0.884	0.658
	Ico3		
	Ico4		
	Ico5		
Appeal	App1	0.925	0.755
	App2		
	App3		
	App4		
Heritage Design			
Familiarity	Fam1	0.888	0.667
	Fam2		
	Fam3		
	Fam5		
Continuity	Con1	0.832	0.625
	Con3		
	Con4		
Functionality	Fun2	0.829	0.550
	Fun4		
	Fun5		
	Fun6		
Aesthetic	Aes2	0.897	0.744
	Aes3		

	Aes4		
Customer Experience			
Sensory	Sen1	0.884	0.666
	Sen2		
	Sen3		
	Sen5		
Affective	Aff1	0.868	0.623
	Aff3		
	Aff4		
	Aff6		
Social	Soc1	0.856	0.599
	Soc3		
	Soc4		
	Soc5		
Satisfaction			
	Sat1	0.943	0.733
	Sat2		
	Sat3		
	Sat4		
	Sat5		
	Sat6		

However, it is suggested that discriminant validity reflects the extent of distinctiveness on two conceptually similar concepts (Hair *et al.*, 2010, p. 125). The assessment of discriminant validity could be executed by the expectation of higher correlation coefficient comparing to each construct after calculating each AVE square roots. The results of discriminant validity pertaining to the current research are shown in **Table 5.10**.

Table 5.10: Discriminant Validity

	TRInat	CRIsymb	CRIfun	CRIapp	CIqual	CIcoo	CImpo	CIhis	SATIS	HDcon	HDfam	HDfun	HDaes	EXPsoc	EXPsen	EXPaff
TRInat	**0.719**															
CRIsymb	0.432	**0.811**														
CRIfun	0.565	0.523	**0.740**													
CRIapp	0.507	0.723	0.528	**0.869**												
CIqual	0.325	0.268	0.515	0.460	**0.820**											
CIcoo	0.461	0.384	0.606	0.545	0.585	**0.741**										
CImpo	0.468	0.536	0.518	0.658	0.597	0.582	**0.755**									
CIhis	0.357	0.355	0.326	0.204	0.335	0.243	0.555	**0.840**								
SATIS	0.411	0.338	0.590	0.545	0.698	0.564	0.558	0.201	**0.856**							
HDcon	0.561	0.517	0.607	0.595	0.419	0.574	0.571	0.333	0.513	**0.791**						
HDfam	0.377	0.330	0.381	0.195	0.113	0.219	0.210	0.388	0.097	0.581	**0.816**					
HDfun	0.463	0.462	0.681	0.570	0.503	0.563	0.549	0.247	0.636	0.654	0.365	**0.741**				
HDaes	0.543	0.381	0.479	0.581	0.447	0.543	0.518	0.164	0.604	0.700	0.209	0.616	**0.863**			
EXPsoc	0.383	0.289	0.530	0.514	0.668	0.613	0.512	0.146	0.738	0.466	0.016	0.561	0.616	**0.774**		
EXPsen	0.326	0.253	0.351	0.163	-0.022	0.101	0.209	0.255	0.123	0.271	0.191	0.259	0.212	0.000	**0.816**	
EXPaff	0.547	0.358	0.577	0.480	0.569	0.501	0.522	0.221	0.738	0.539	0.090	0.585	0.629	0.653	0.314	**0.789**

5.4.4 Hypotheses Testing

This section presents the goodness of fitness results pertaining to structural model. Following to the demonstration confirmatory factor analysis (CFA), the tests and their results are given to evaluate the goodness of fitness on the current model. According to Hair (et al., 2010), at least four tests of model fit indices should be above the accepted range. The commonly accepted seven goodness of fitness indices are adopted by the model. Those indices are; chi-square (χ2) to the degree of freedom (Df), goodness of fit index (GFI), adjusted goodness of fit index (AGFI), incremental fit index (IFI), Tucker-Lewis index (TLI), comparative fit index (CFI) and root mean square error of approximation (RMSEA). The results of goodness of fitness indices could be seen below **Table 5.11** along with the recommended values.

Table 5.11: Goodness of Fitness Indices

Model Fit Indices	Recommended Criteria	Default Model
χ2/df	1:3	2.106
GFI	≥ 0.90	.808
AGFI	≥ 0.80	.783
IFI	≥ 0.90	.913
TLI	≥ 0.90	.904
CFI	≥ 0.90	.913
RMSEA	<.80	.046

As it seen in the table above five of the goodness of fit indices are in the recommended level, which makes a good structural model according to Hair (et al., 2010). Based on the results the following goodness of fitness indices; the chi-square (χ2) to the degree of freedom (Df) by 1:3, incremental fit index (IFI) by .913, Tucker-Lewis index (TLI) by .904, comparative fit index (CFI) by .913 and root mean square error of approximation (RMSEA) by .046., are all in the accepted range. On the other hand, both goodness of fit index (GFI), adjusted goodness of fit index (AGFI) are below the recommended level as the former is .808 and the latter is .783.

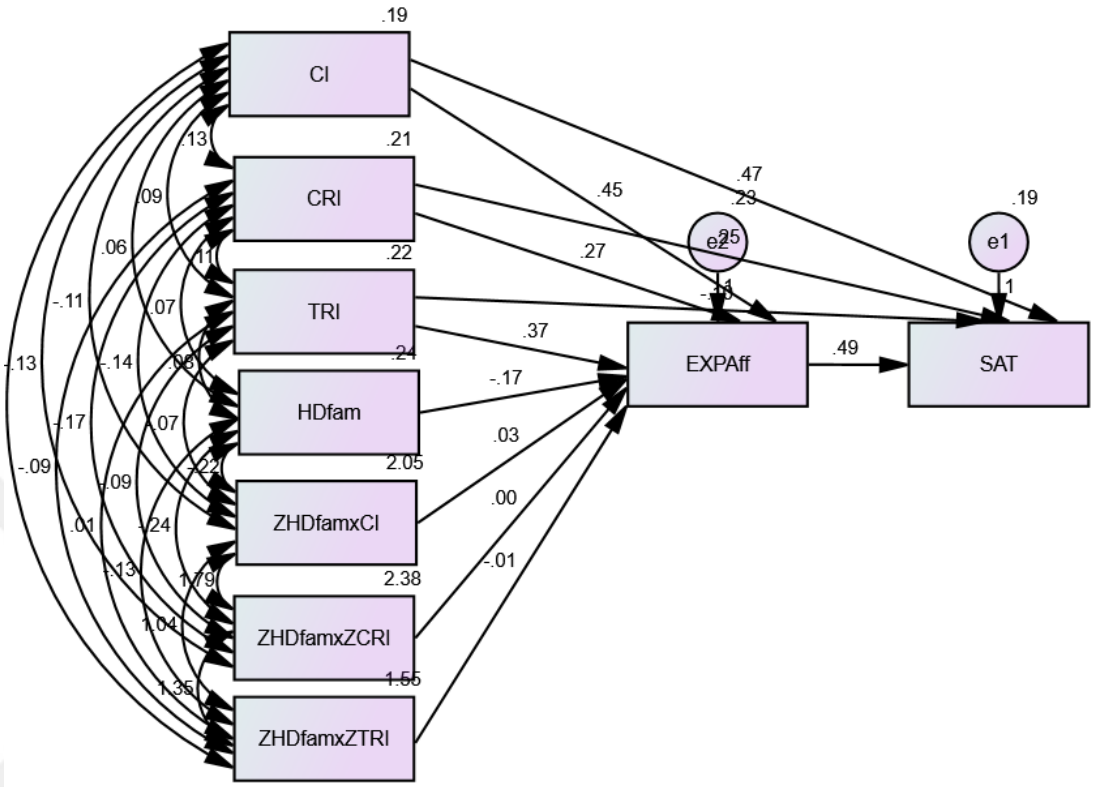

Figure 5.3: Structural Model 1

The complexity of the conceptual model required to test more than one models through each dimension of both moderator corporate heritage design and mediator customer experience contructs. The Structural Model 1 shows the estimate values on the first model that includes customer experience affection and corporate heritage design familiarity dimensions. The rest of the models could be seen in the Appendix section (see p….)

Table 5.12: Hypothesis Results

	Estimate	S.E.	C.R.	P- value	Results
H1a Corporate Identity – Costumer Experience (Sensory)	-.230	.140	-1.639	.101	Rejected
H1b Corporate Identity – Costumer Experience (Affection)	.494	.068	7.272	***	Accepted
H1c Corporate Identity – Costumer Experience (Social)	.868	.076	11.403	***	Accepted
H2a City Role Identity – Customer Experience (Sensory)	.491	.135	3.641	***	Accepted
H2b City Role Identity – Customer Experience (Affection)	.243	.065	3.711	***	Accepted
H2c City Role Identity – Customer Experience (Social)	.242	.073	3.305	***	Accepted
H3a National Role Identity – Customer Experience (Sensory)	.440	.117	3.744	***	Accepted
H3b National Role Identity – Customer Experience (Affection)	.347	.057	6.092	***	Accepted
H3c National Role Identity – Customer Experience (Social)	.119	.064	1.870	.062	Rejected
H4a Heritage Design – Corporate Identity X Customer Experience	-.119	.049	-2.451	.014**	Accepted
H4b Heritage Design – City Role Identity X Customer Experience	.206	.055	3.731	***	Accepted
H4c Heritage Design – National Role Identity X Customer Experience	-.069	.027	-2.591	.010**	Accepted
H5a Customer Sensory Experience - Satisfaction	-.006	.022	-260	.795	Rejected
H5b Customer Affective Experience - Satisfaction	.489	.039	12.604	***	Accepted
H5c Customer Social Experience - Satisfaction	.400	.034	11.754	***	Accepted
Mediation Effects by using bootstraps	Estimate	Lower	Upper	P-value	

H6a Customer Experience – Corporate Identity and Satisfaction	.357	.248	.497	.000***	Accepted
H6b Customer Experience – City Role Identity and Satisfaction	.039	.019	.067	.001***	Accepted
H6c Customer Experience –National Role Identity and Satisfaction	.043	.021	.072	.001***	Accepted
*Standard Error, CR= Critical Ratio (t-value); Standard regression Weights= Estimate (path estimate); Significance Value= p-value, **= p<0.05, ***= p<0.001*					

The Table 5.12 above demonstrates the path analysis results of each hypothesis proposed in Chapter 3.2. The three criteria are used to test the proposed hypotheses. Those criteria are; critical ratios (CR, t-values), standard regression weights (estimate, path estimate), and significance Value (p-value). The commonly accepted significance requires t- value higher than ±1.96. P-value <0.05 is accepted as significant, and p- value lower than 0.001 is accepted as highly significant. The table shows that all the hypotheses, apart from hypothesis (1a), (5a), and (3c), are significant, acquire the required t- value and p-value.

The relationship between corporate Identity and both affective customer experience (t value= 7.272, p< 0.001***) besides social costumer experience (t value = 11.403, p< 0.001***) are highly significant supporting the hypothesis (1). Based on the results, hypothesis (2) representing the relationship between city role identity and customer experience is highly significant (2a: t value= 3.641, p< 0.001***; 2b: t value =3.711, p< 0.001***; 2c: t value = 3.305, p< 0.001***). In addition to that the relationship between national role identity and customer experience is found significant. Hence hypothesis 3 is accepted (3a: t value= 3.744, p< 0.001***; 3b: t value =6.092, p< 0.001***). On the other hand, the structural model analysis reveals the significant moderation role of corporate heritage design on the relationship between corporate identity and customer experience (4a: t value= -2.451, p< 0.05**), city role identity and customer experience (4b: t

value= 3.731, p< 0.001***) as well as national role identity and customer experience (4c: t value= -2.591, p< 0.05**). Moreover, the relationship representing the impact of customer experience on customer satisfaction (H5) is also accepted (5b: t value= 12.604, p< 0.001***; 5c: t value= 11.754, p< 0.001***).

5.5. Summary

This chapter begins with the selected sample and the data collection methods. Furthermore, the preliminary analysis process including, missing values, outliers, demographic characteristics of the research sample, frequency, normality and reliability of the data set are demonstrated. Afterwards, the main analysis methods and the results are demonstrated. Later, the goodness of fit indices are shown to validate the construct. Finally, the chapter ends with hypotheses results. The next section (Chapter 6) continues with the hypotheses results based on the relevant literature and conceptual framework.

CHAPTER 6: DISCUSSION AND CONCLUSION

6.1. Introduction

This chapter discusses the analysis results in detail. First, the hypothesis on the relationship between corporate identity and customer experience are presented. Then, based on the hypotheses results, the city and national role identity impact on customer experience as well as the moderation role of corporate heritage design are explained. The chapter pursues to provide the contributions on both theoretical and practical point of view. Finally, Chapter 6 concludes with the limitations regarding the study besides future research suggestions.

6.2. Discussion on Results

The current research intended to scrutinize the significance of corporate heritage design as well as multiple role identities. On the other hand, the study explored the relations among those and customer satisfaction through customer experience.

The research added upon the existing corporate heritage literature in regard with different types of corporate heritage traits (Balmer *et al.*, 2006; Urde *et al.*, 2007; Balmer, 2011; Wiedman *et al.*, 2011; Burghausen and Balmer, 2014a; Balmer and Chen, 2017). Existing studies were benefited in order to develop measurements and to test corporate heritage design and multiple role identities. On top of that, the research adopted one of the most common customer experience definition (Schmitt 1999; Brakus *et al.*, 2009) to test customer experience with a company acquiring corporate heritage design and multiple role identities. This section will be discussing the results regarding each hypothesis developed at the beginning of the study.

Table 6.1: Hypothesis Results

Hypothesis	Results
H1a: Corporate Identity – Customer Experience (Sensory)	Rejected
H1b: Corporate Identity – Customer Experience (Affection)	Accepted
H1c: Corporate Identity – Customer Experience (Social)	Accepted
H2a: City Role Identity – Customer Experience (Sensory)	Accepted
H2b: City Role Identity – Customer Experience (Affection)	Accepted
H2c: City Role Identity – Customer Experience (Social)	Accepted
H3a: National Role Identity – Customer Experience (Sensory)	Accepted
H3b: National Role Identity – Customer Experience (Affection)	Accepted
H3c: National Role Identity – Customer Experience (Social)	Rejected
H4a: Heritage Design – Corporate Identity X Customer Experience	Accepted
H4b: Heritage Design – City Role Identity X Customer Experience	Accepted
H4c: Heritage Design – National Role Identity X Customer Experience	Accepted
H5a: Customer Experience (Sensory) – Customer Satisfaction	Rejected
H5b: Customer Experience (Affective) – Customer Satisfaction	Accepted
H5c: Customer Experience (Social) – Customer Satisfaction	Accepted
Mediation Effects by using bootstraps	
H6a: Customer Experience – Corporate Identity and Satisfaction	Accepted
H6b: Customer Experience – City Role Identity and Satisfaction	Accepted
H6c: Customer Experience –National Role Identity and Satisfaction	Accepted

6.2.1 Corporate Identity

At the beginning of the study in section 3.1, it is suggested that corporate identity affects the customer experience in a positive way. After completing data analysis, the results confirmed the positive relation (H1) between corporate identity and customer experience.

Corporate identity is accepted as the differentiating features of organisations whether profit to non-profit. On the other hand, from the industrial point of view, corporate identity was initially restricted within the design elements such as logo, name and design (Feldman, 1969; Olins, 1978). On the

contrary, after the advances in the field of corporate identity, design features of any organisation have been accepted only one layer of corporate identity. Even though the design is an important part of corporate identity, there are other elements compromising the notion of corporate identity (Baker and Balmer, 1997; Balmer, 1995; He and Balmer, 2007; Melewar and Karaosmanoglu, 2006; Balmer, 2017). A simple definition of corporate identity is "The mix of elements which gives organisations their distinctiveness; the foundation of business identities" (Balmer, 2001; p. 254). In this study, based on relevant literature, the main corporate identity dimensions are respectively; Quality, Country of Origin, History, and Positioning.

One of the layers of corporate identity is the quality which has been pointed out by scholars while giving the definition of the concept (Marvick and Fill, 1997; De Chernatony, 1999; Balmer, 2008; Simpson, 1988; Ingenhoff and Fuhrer, 2010; Kiriakidou and Millward, 1999; Abratt and Kleyn, 2012; Balmer, 2017). Quality could be used as a tool to convey a message from the organisation (Balmer, 2017) besides it could foster the perception among the stakeholders (Marvick and Fill, 1997; Cravens *et al*., 2003; Abratt and Kleyn, 2012).

On the other hand, country of origin, defined as a country's reputation and stereotypes linked to a country regarding a product in customer mind (Piron, 2000), constitutes another dimension of corporate identity. Country of origin finds a place in the corporate identity realm as a communication vehicle of specific characteristics related to an organisation (Melewar, 2003).

History is found to be another important component of corporate identity in the current study. Although some organisations can be seen to imply some changes or reinterpretation of their real history (Aaker, 2004; Beverland *et al*., 2008), studies related to corporate identity demonstrates powerful link between corporate identity and the history (Moingen and Ramanantsoa, 1997; Balmer, 2001; Balmer and Greyser, 2006, Melewar and Karaosmanoglu, 2006) as it could be prominent for the stakeholders of any company (Balmer, 2017).

Another constituent of corporate identity is positioning which shows a company's willpower to locate their organisation comparing other organisations

within a similar industry. According to Schmidt, (1995) positioning is an organisational procedure in order to differentiate itself from rivals while finding a clear position itself. Similarly, in his study Balmer (2017), suggests that positioning is a dimension of corporate identity as organisations try to differentiate themselves among others in a meaningful and favourable way. As the subject of the study traditional London taxis, companies could position themselves on their long-lasting heritage (Urde *et al*., 2007).

Although the current study could not find research measuring corporate identity and its impact on customer behaviours, there are some studies observing the corporate identity constituents listed above and their impact on customer behaviour. Literature shows that quality has a positive impact on customer behaviour and preference on both product and service (Simpson 1988; Yoo *et al*. 2000; Pappu *et al*., 2005, Netemeyer *et al*., 2004; Low and Lamb 2000). In a parallel way, some studies demonstrated a positive relationship between history and behaviour shown by customers (Lehman *et al.,* 2008; Wiedmann *et al.,* 2011a; Merchant and Rose, 2013). On the other hand, Fuchs and Diamantopoulos (2010) scrutinised the impact of market positioning on customers and found out it could have impacts on customers. Finally, many scholars tested the relation between the county of origin and customer behaviour and showed a positive relation (Balabanis and Diamantopoulos, 2004, Mohd Yasin *et al*., 2007; Ahmed and d'Astous, 2008).

Although hypothesis 1 is supported by the modesl as two corporate identity has positive relationship with both customer experience dimensions respectively affectiveb (H1b) and social (H1c), the results show that sensory dimension is not supported (H1a). The reason might be traditional London taxi and its continuous heritage that makes it more meaningful. Hence, with its augmented role identities, corporate identity attached to the black cabs are likely to meet customers' affective and social needs more than sensory dimension of their personal experience. As stated in the conceptual framework development (Section 3) in this study, the research suggested that there is a positive relationship between corporate identity and the customer experience based on

the literature. After the results, the proposed hypothesis (H1) is supported by the results showing p values are in the accepted range.

6.2.2 City Role Identity

Some unique organisations are associated with other identities such as culture, country or cities if the organisation has been in operation for multiple generations. Augmented identity is defined as an additional identity which relates to a place, group, society etc., and assigned to a company by its stakeholders (Balmer, 2011; 2013). In the current study, preliminary research showed that traditional London taxi has a strong association with the city of London. It has been not only a transportation vehicle but also one of the icons of London. At this point, the literature related to city identity and transportation informed the hypothesis (H2) and the results showed that city role identity has a positive effect on customer experience as it is within the accepted p-value ranges.

Although there are multiple elements constructing a city identity, transportation is one of the major parts of city identity. This has been suggested by many scholars within the realm of city branding (Karavatsix, 2004, Anholt, 2006; Evans, 2003; Merrilees, *et al.,* 2013; Parkerson and Saunders, 2005). Some studies show that customers might have negative attitudes towards cities with negative transportation system (De Carlo *et al.,* 2009; Tompsin and Schofield, 2007). On the other hand, comfort, punctuality, safety and accessibility are the aspects affecting customer satisfaction (Eboli and Mazulla, 2011, de Oña *et al.,* 2013; Borgaday *et al.,* 2014). Even though, traditional London taxis have a strong heritage, they have enough functional capability to meet the customer demands as companies should be up to date (Aaker, 2004; 2007; Beverland, 2005b; Beverland *et al*., 2010, Keller, 2003; Weerawardena *et al*., 2006) which is suggested as relative invariance mixed of continuity and change within the corporate heritage realm (Balmer, 2011a).

Another important role of traditional London taxi is representing and conveying city as it is a well-known London icon besides being a transportation vehicle. On the other hand, traditional London taxis differentiate from other static

architectural icons such as Westminster Palace, Big Ben or skyscrapers. Thanks to its nature, it should be classified as a dynamic icon since it could be updated based on the city modern needs, unlike the static icons which could not represent the city by not being able to adapt strategies around improving city identity (Trueman and Cornelius, 2006). Traditional London taxis have been able to update itself based on Transport for London demands while it has preserved its ongoing characteristics.

Icons have an important role in representing and differentiating the cities among other cities. In parallel of that city administrators always create a city brand to stand out among other cities. It is asserted that city branding is the sum of city brand facets identifying and distinguishing a city with a positive image construction (Cai, 2002). For instance; symbolic value could be a prominent aspect which could be filled by both icons and symbols belonging to a destination. Both icons and symbols could add benefits to cities by clarifying and distinguishing city brands (Tasci *et al.,* 2006). In like fashion it is contested that if icons used in specific city events it would be a reminder and distinguisher through media outlets to the city stakeholders (Green *et al.,* 2003). One of the main characteristics of an icon is that it circulates via souvenirs, books, postcards etc. (Monnet, 2006) while helping the audience to remember the destinations. London cabs are also seen in London related media outlets such as postcards besides other iconic transport images like a Routemaster bus (James, 2012).

There are some specific examples of transportation vehicles which became icons to associated destinations. Some of those could be listed as; London Black cabs, San Francisco street cable cars, or New York yellow cabs preserving as operating transportation vehicles (Robbins, D., 2003). On the other hand, there are some famous landmarks as another type of icons defining the main characteristics of a city landscape. In modern days similar to other cities London landscape also transformed from industrial to the post-industrial city with the help of certain structures such as skyscrapers which became part of the London silhouette (Hamnett, 2003, p. 17). While some of those static icons of London have changed (Kaika, 2010), for decades traditional London taxis have been able to add aesthetic features to London landscape as a synonymous part of the city (Sklair, 2010). At

this point, it is asserted some city stakeholders such as visitors attribute to value to city landscapes as one of the aspects of experience (Urry and Larsen, 2011). Some scholars found that the icons might impact customers' belief in a positive way resulting similar effect on a different dimension of experience such as cognitive and affective experience (Urry and Larsen, 2011).

As suggested in the study based on the related literature city role identity has a positive impact on the customer experience within the traditional London taxi contest. It is commonly accepted that customer experience consisting of different facets including sensory, affective, social experience (Brakus *et al.,* 2009). In the current study, it is found that city role identity of traditional London taxi which acquires values such as functional, symbolic, and aesthetic has a positive effect on customer experience (H2).

6.2.3 National Role Identity

There are other identities associated with the traditional London taxis based on preliminary research. It could be easily suggested that London black cab dos not only strong bound with only the city but also Britain and its national identity thanks to its rich heritage. From the traditional heritage point of view, it is suggested that heritage is valued socially within certain groups as an object, symbol or monument (Bessiere, 1998). In the same vein, over the time, some specific institutions might be attributed new cultural, territorial or temporal associations (Balmer, 2013; Burghausen and Balmer, 2014a, b; Balmer and Chen, 2015). As a result, "heritage identities are especially meaningful in creating an identity and in nurturing identification not only with the organisation but, with other meaningful identities" (Balmer, 2011a, p. 1389). Since these extra identities add meaning to the institutions and differentiate them from others, even some recently established companies have strategies to link themselves with certain cultures or nations (Schroder *et al.,* 2017). There are some empirical studies on corporate heritage observing the relation with an organisation associated meaningfully with other entities such as social or cultural and the response from its stakeholders (Wiedman *et al.,* 2011a; Balmer and Chen, 2017; Burghausen and

Balmer, 2014b). This research also expands on this relationship since the data show that there is a positive relationship between national role identity of traditional London taxi and customer experience (H3).

Companies with corporate heritage differentiate among others thanks to their meaningful associations with other entities. On the other hand, this also provides its stakeholders with a platform to experience or express those entities linked with the companies. Customer experience has many facets including social experience to meet customers' social needs. Hence as part of their experience customers could identify with a certain way of lifestyle or other social identities (Schmitt, 1999; Brakus *et al.,* 2009).

In terms of national identity, car manufacturers could also play an important role. At a certain period of times, British cars were important to express the British national identity. It is suggested that some customers might show their support domestic production through using British vehicles (Hooley *et al.,* 1988; Smith, 2014). For some customer, British cars could carry reflective role on British identity while being a way of collective expression of Britishness. Although traditional London cab could be seen that way, it also gives visitors to experience certain aspects of the British way of life. The relation between the London Taxi and the British way of life also accepted by the British public themselves. For instance, a hotel conducted research among many Britons and listed traditional Black cab as one of the most loved ones such as The Queen, Big Ben, Shakespeare, BBC and so on (Khan, augment2008). In his book Cocco (1999) also lists London black cab as a British iconic benchmark while claiming open sports in UK are as much a British icon as Big Ben, Queen and London taxi.

The manufacturer of traditional London cabs also recognizes its significance within the British culture. In their website (levc.com, 2017), a section designated to those relations via different examples such as Hollywood movies or children books starring traditional London taxis. The study by Moncrieffe, and Moncrieffe, (2019) also reveals that London black cab image is used as representative of British values and British identity among primary school students. Those relations with black cabs and British nation imbued authenticity

to the London taxis, which could be resonated among customers. Some studies suggest that authenticity is one of the values searched by the customer since it brings extra meanings to experience (Mohart, 2015; Beverland, 2005; Lemke *et al.,* 2011).

As stated at the beginning of this section, there are few corporate heritage studies with empirical data to evaluate the impact of associated role identities of specific organisations with corporate heritage. In their study, after interviewing with different stakeholder groups, Burghausen and Balmer (2014) found that there is a strong association between Britain's oldest Brewery Company Shepherd Neame and UK's brewery heritage. On the other hand, Wiedmann (*et al.,* 2011a) and his colleagues conducted quantitative research among one of the world's leading car manufacturers. In their study, they demonstrated that customer behaviour is positively affected by national and cultural associations as part of corporate heritage. Another empirical study among Chinese customers of long-lasting pharmacy company, Tong Ren Tang, finds that there is a positive relationship with customer satisfaction and Tong Ren Tang's Chinese Imperial and cultural identities (Balmer and Chen, 2017). The only customer experience dimension that does not show a positive relation with the national role identity was social role identity (H3c) while national role identity effects other customer experience dimensions in a positive way (H3a, H3b). At this point target sample might be the answer with the negative effects of national role identity on social experience. The survey does not investigate the different sort of stakeholders such as visitors or locals in regard with usage of black cabs. On the other hand, data collection sources might consist more visitors than locals, which could explain why black cabs national identity has negative relationship with users' social experience. It is more likely that visitors consider black cabs more like visitor attraction and perceive it as part of London rather than accepting it as a National treasure of Britain. Although social dimension of customer experience is not supported, the current study it is also clearly shown with the analysis results, there is a positive relation (H3) between traditional Black cab's British identity and customer experience.

6.2.4 Moderator Effect of Heritage Design

An important subject of this study is scrutinising Heritage design elements and their moderator impacts between customer behaviour and multiple identities of traditional London taxis. Based on the result section the study approved that there is a moderator effect of heritage design on traditional London taxi's identities and customer experience (H4).

Many institutions need to find a way to convey their messages from the company to the stakeholders. It is asserted that companies with heritage could exploit many tools such as symbols, packaging, advertising or graphics a way of communication (Ballantyne *et al*., 2006). One of these communication vehicles, symbols, could be perceived as an indicator of core values for the companies with corporate heritage (Urde *et al*., 2007). What makes symbols significant is their ambiguousness but richness with imbued information as well as having the potential to create an emotional bridge with customers (Borja de Mozota, 2003). For instance, a specific colour could have a bond with a company and its heritage and carry a secondary meaning, which leads companies to attempt registering colours as trademarks (Hoek and Gendall, 2010).

Within the corporate identity and corporate brand literature, design elements have been always part of the discussion. In the very beginning of the corporate identity research, visual factors are defined as the main aspects of corporate identity by the practitioners. Well-known corporate identity investigator Wally Olins focused on design as the main manifestation tool of identity (Olins, 1978). However, throughout the years, corporate identity scholars opposed the idea and defined visual elements only one of the facets of corporate identity (van Riel and Balmer 1997, Baker and Balmer 1997, Melewar and Karaosmanoglu 2006, He and Balmer 2007). Design elements also found a place within the developing area of corporate heritage. In his study Balmer (2013) defines corporate heritage design as "The pursuance and continuance of certain design features vis-a` -vis products, graphic design, architecture, livery, etc. can accord an entity with heritage distinctiveness if it has prevailed over time. Also relates to the coherent visual system is in place (corporate design/house style/ visual identity)" (Balmer, 2013, p. 318).

The well-known symbolic interactionism theory assists to explain corporate heritage design and customer perception on it. In a basic explanation, symbolic interactionism is the meanings attributed to objects, behaviours or events among people. Leigh and Gabel (1992, p. 27) suggest that "Individuals are assumed to relate to objects or events based on their symbolic meaning given by society. It is a well-known fact that consumers may buy a given product for reasons other than the product's basic functional performance. People are often motivated to buy a good or service based on what it represents to themselves, and to others with whom they associate or to some societal referent". Hence consistent design elements could become associated with certain meanings and communicate the corporate heritage traits of an organisation.

Although there is not enough research on corporate heritage design, some scholars noted the significance of the phenomena in their studies. A case study Santos (*et al.,* 2016) and other scholars conducted research on a well-known Portuguese soap and toiletry manufacturing company Arch. Brito. They suggested that organisations could exploit their design heritage to create a brand strategy. In another case study on a financial institution by Bargenda (2015) observes the relation of heritage design and a corporate identity based on the main corporate heritage aspects suggested by Urde (*et al.,* 2007). In her study, Bargenda suggests that heritage design elements regarding architecture could help organisations to build identity besides providing differentiation.

On the other hand, some of the studies specifically reflect how important is maintaining heritage design characteristics. Customers might give negative reaction when companies are not able to preserve continuous design elements since it is embedded with various meanings. For instance; Rindell (*et al.,* 2015) and his colleagues conducted qualitative research to identify the perception of corporate heritage image among the famous scooter brand Vespa. In their study, it is shown that customers responded in a negative way after seeing a change in heritage design elements. The same study suggests that customers consider Vespa in a conflict on their claim of protecting its heritage. In another corporate heritage study, Balmer (2012) points out the stakeholders' negative reflections on the modification of British Airways corporate design traits. Companies with

corporate heritage and continuous heritage design could also provide a base of multi-faceted sensory characteristics for the stakeholders. In their study with company managers, Burghausen and Balmer (2014) identify corporate heritage multi-layered sensory identities as manifested and identified main senses of sight, sound, scent, taste, and touch, which could be reflected on design elements. As a result, customer experience could be enriched via those sensory elements since there is a connection between design and customer experience (Schmitt 1999b). Based on the studies above the current research proposed that continuous design elements of traditional London taxi have a moderator effect on the relationship between multiple identities attached to it and customer experience, which was accepted by the analysis results of the study (H4).

6.2.4.1 Customer Experience

In conceptual development part of the study, we proposed that customer experience has a positive impact on customer satisfaction (H5). On the other hand, we also proposed that customer experience has a mediating role between London black cab multiple identities and customer satisfaction (H6). The result of analysis supported both proposed hypothesis as both have a p-value within the accepted range.

There have been many studies adopting a customer-based approach to identify and scrutinise the notion of customer experience. It is defined as internal feelings, cognitive efforts, senses or attitudes based on customer assessment resulting from experience towards a product, service or brand (Brakus *et al.,* 2009). One of the most well-known studies by Schmitt (1999a) has been adopted by many scholars. His study finds its base on the previous studies (Holbrook and Hirschman, 1982; Padgett and Allen, 1997) and suggests that customer behaviour, emotion and cognitive process constitutes the notion of experience. In addition to that further studies assert that customer experience plays a key role in building customer satisfaction (Brakus *et al*., 2009; Iglesias *et al*., 2011).

Putting aside the fact that the literature has various point of views on the different dimensions of customer experience, a comprehensive perspective was adopted towards the notion of customer experience. In consequence of that customer experience includes different antecedents such as sensory, emotional, cognitive and social (Schmitt, 1999a; Gentile *et al*., 2007; Frow and Payne, 2007; Brakus *et al*., 2009; Rose *et al*., 2011; Lemon and Verhoef, 2016). Studies looking into various facets of experience proves this comprehensive point of view within the different concepts whether online (Rose *et al*., 2012; Simon *et al*., 2013), retailing (Kim *et al*., 2015), multiple brands (Gentile *et al*., 2007; Verhoef *et al.,* 2009; Brakus *et al*., 2009; Iglesias *et al*., 2011), or tourism (Barnes *et al*., 2014). The current research is also informed by the commonly accepted dimensions besides the arguments in the literature. Hence, customer experience dimensions are scrutinised by a greater number of scholars inform the current study. Those dimensions can be listed as follows; sensory (sense), affective (feel), cognitive (think), physical (behavioural/act) and relational (social - identity /relate) experiences of customers (Schmitt, 1999a; Brakus *et al*., 2009).

Although customer experience studies mainly focus on the identification of different antecedents, it is concluded that customer satisfaction is a subsequent result of customer experience as satisfaction defined as negative or positive disconfirmation of expectation created based on experience (Oliver, 1999; Yi, 1990, Lemon and Verhoef, 2016). On top of that many empirical studies also recognized the mediation role of experience as well as its relationship with customer satisfaction (Brakus *et al*., 2009; Iglesias *et al*., 2011; Nysveen *et al*., 2013; Kim *et al*., 2015). The study shows that customer experience effects satisfaction in a positive way except the sensory dimension (H5a). Customer experience sensory dimension addresses the senses of the customers. However, some customers might see black cab as a platform to satisfy their affective and social experience needs, they might think less of sensory experience needs while using traditional black cabs. The iconicity and other meaning attached to the traditional London taxis might cause customers to overlook its sensory traits and focus more on the meaningful traits that addresses affective and social experience dimensions. The current study also adopted this point of view and proposed that

customer experience has a positive relationship with customer satisfaction (H5) besides having a mediator role among corporate identity, city role identity, national role identity, and customer satisfaction (H6). Both proposed hypotheses are accepted based on the result of the analysis.

6.2.5 Reflections on Analysis and Conclusion

As I researcher I believe that the analysis undertaken her, extends our knowledge on corporate heritage. In my opinion the findings will be of interest to the companies and organisations that are linked to additional identities by the customers. The findings reported here shed new light on how augmented roles identities impact customer behaviour. The results show that black cab is a significant icon for both London and Britain, which assists customers to have social and affective experiences. Hence, corporate heritage companies should define and polish other meaningful identities as they are potential resources to differentiate from other companies. This thesis has provided a deeper insight to corporate heritage design elements and its antecedents. It is one of the few empirical studies observing the impact of corporate heritage design as a tool conveying meaningful identities to the stakeholders. Also, the present study provides the first comprehensive assessment regarding the moderation effect of corporate heritage design between augmented identities and customer experiences. The results confirm that corporate heritage elements strengthen the customer perception of city, national role identities and their impact on customer experiences. Although the research is limited to traditional black cabs, the results adds newer insights to gain better understanding on corporate heritage.

6.3. Theoretical Contribution

Although the notion of traditional heritage has been attracted to many scholars, there is a lack of knowledge on the emerging subject of corporate heritage. Hence, the latent area has many questions to answer by scholars. Corporate heritage is the ongoing traits that relate to an organisation past, present

and future. Those features if protected could give advantage to companies to differentiate themselves among others. Companies with corporate heritage could be perceived as stable by the stakeholders of many generations (Balmer and Chen, 2017). As a result, it stipulates more exploration and observation shine a light on this topic within the corporate marketing realm. This study aimed to add some theoretical insights as well as practical suggestions through observing one of the well-known corporate heritage entities namely, traditional London taxi. One of the main theoretical contributions of the study to develop a model including to observe the relationships among heritage design, corporate identity, augmented role identities, and customer behaviour. On the other hand, the study also makes a contribution by validating the model through empirical data. This study makes theoretical contributions by introducing city role identities as an augmented role identity. On top of that, the notion of corporate heritage design was explained by defining the antecedents.

Although corporate heritage could be a differentiating tool for the companies, it depends on the company itself to exploit their heritage as an advantage. Scholars who scrutinised corporate heritage also suggested that corporate heritage is not valuable if not benefited by the organisations (Urde *et al*., 2007). The current research aimed to add some explanation to the corporate heritage via observing certain corporate heritage traits. As mentioned initially in this section, one of the main contributions of the current study to develop a model that observes the relationships among some corporate heritage traits and customer behaviour. Since the corporate heritage design was the starting point of the study, the initial model proposed to show the moderator impact of corporate heritage design between corporate identity and customer behaviour. However, after preliminary research augmented role identities belonging to the case subject, traditional London taxi, also added to create the last model to test. After that, the model proposed to show the effect of corporate identity, city role identity and national role identity on customer satisfaction through customer experience. The model also shows the moderation of heritage design on the connection between corporate identity, city role identity, and national role identity to the customer experience.

The study also added to the corporate identity field by defining antecedents. On top of that corporate identity impact on customer behaviour tested via the proposed model. The notion of corporate identity has been discussed by corporate marketing scholars. In the beginning, corporate identity was restricted within the design elements by the practitioners (Feldman, 1969; Olins, 1978). On the other hand, further research suggested that design elements create only one facet of the corporate identity since corporate identity is the sum of the differentiating corporate traits (Baker and Balmer, 1997; Balmer, 1995; He and Balmer, 2007; Melewar and Karaosmanoglu, 2006; Balmer, 2017). The literature review revealed there are many layers of corporate identity. Those are respectively, Quality, Country of Origin, History, and Positioning. The quality trait of corporate identity (Ingenhoff and Fuhrer, 2010; Kiriakidou and Millward, 1999; Abratt and Kleyn, 2012) could be a communication tool regarding organisational conveyed message to customers (Marvick and Fill, 1997; Cravens *et al*., 2003). Another dimension of corporate identity is the country of origin vis a vis a service or product, which is the perceptions of a country associated with the service or product (Piron, 2000). Country of origin is a significant tool to convey certain characteristics of an organisation (Melewar, 2003). On the other hand, history is accepted as another element constituting corporate identity (Moingen and Ramanantsoa, 1997; Balmer, 2001; Melewar and Karaosmanoglu, 2006) which could be perceived eminent by the stakeholders (Balmer, 2017). The last corporate identity dimension is the positioning of a company, which is a differentiation process from the rivals (Schmidt, 1995). Certain companies with a long history and heritage could stand out among others by creating differentiation strategies based on their heritage (Urde *et al*., 2007). The current study could not find a measurement of perceived corporate identity among customers. However, some scholars empirically tested corporate identity traits including quality (Pappu *et al*., 2005; Netemeyer *et al*., 2004), history (Lehman *et al.,* 2008; Wiedmann *et al.,* 2011a, b; Merchant and Rose, 2013), market positioning (Fuchs and Diamantopoulos, 2010), and country of origin (Balabanis and Diamantopoulos, 2004, Mohd Yasin *et al*., 2007; Ahmed and d'Astous, 2008). The current study theoretically contributes to the corporate identity field by defining and measuring the dimensions listed above. As a result, the research empirically

proved that there is a positive relationship between corporate identity and customer satisfaction as a result of experience within the traditional London taxi context.

Another theoretical contribution of the study is testing the consequences of national role identity construct. The national identity notion is under the corporate heritage trait of augmented role identity, which is defined as the associated social, cultural, territorial and other identities attributed to a company, service or product (Balmer, 2013; Burghausen and Balmer, 2014a; Balmer and Chen, 2015). Those added identities build extra meaning which could satisfy the social needs of customers as part of their experience (Schmitt, 1999; Brakus *et al.,* 2009). Previous corporate heritage studies on companies such as Shepherd Neame by Burghausen and Balmer (2014a) via interviews among stakeholders show that there is a bond between the company and the UK's brewery heritage. Similarly, Wiedmann (*et al.,* 2011a) and other colleagues' survey-based research suggest that cultural and national associations receive a positive response from customers as part of corporate heritage. On the other hand, Balmer and Chen (2017) empirically prove that Chinese Imperial association with Tong Ren Tang Pharmacy Company has a positive impact on customer satisfaction. This study adds on augmented identity notion by exploring the impact of traditional London taxi's national identity link with Britain via testing its impact on customer satisfaction through experience.

As is stated above companies might be linked more than one social, cultural, territorial or other identities. In the case of traditional London taxi, the study makes a theoretical contribution by defining the city role identity and its dimensions. The study also tests the subsequence of city role identity regarding customer behaviour within the context of traditional black cab. To do that the study also informed by the city identity and city icon literature. As a result, the city role identity of iconic London Taxi defined by the dimensions respectively; Functional, Iconic, and Appeal. City identity scholars suggest that transportation plays a significant role in the perception of a city identity (Karavatsix, 2004; Anholt, 2006; Merrilees *et al.,* 2013). The functional characteristics such as comfort, safety and punctuality are among the factors affecting customer

satisfaction with a transportation vehicle. On the other hand, there are some transportation means such as San Francisco street cable cars, New York yellow cabs or London Black cabs also became icons to the related destinations (Robbins, 2003). Icons help the process of a city identity construction (Cai, 2002) with clarification, differentiation (Tasci *et al.,* 2006), promotion through media outlets (Green *et al.,* 2003), souvenirs, books and other communication vehicles (Monnet, 2006). London cabs are also seen in London related media outlets such as postcards besides other iconic transport images like a Routemaster bus (James, 2012). The preliminary research showed that traditional London taxi is one of the most known icons of London. It helps the city of London as a promotion and differentiation symbols reminding London to its audience. On top of that, it became an appealing part of London silhouette (Sklair, 2010). The current study among traditional London taxi users contributes to the corporate heritage literature by defining city role identity as another augmented role identity. On top of that, the study validates its impact on customer experience via conducting empirical research among customers.

As it mentioned at the beginning of the section, one of the theoretical contributions of the research is defining the layers of Corporate Heritage design while providing validation of its moderation effect on related corporate identities and customer experience. According to Balmer Corporate heritage design is "the pursuance and continuance of certain design feature vis-à-vis products, graphic design, architecture, livery, etc. can accord an entity with heritage distinctiveness if, it has prevailed over time' (Balmer, 2013 p.318). This study extends the definition via defining dimensions of corporate heritage design as; continuous and familiar design elements consisting of functional and aesthetic characteristics. Although corporate heritage scholars mentioned corporate heritage design (Burghanuse and Balmer, 2014a; Rindell *et al*., 2015; Santos *et al.,* 2016), there is no known study scrutinising the notion in detail. This study makes a theoretical contribution to the area via observing corporate heritage design in more detail.

Corporate heritage design like other heritage assets is evaluated by their longevity and continuity among customers (Urde *et al.,* 2007; Wiedmann *et al*., 2011a). Continuous heritage traits create credibility and trust among customers

(Leigh *et al*., 2006). On top of that continuous design elements become recognizable and familiar among customers, which creates positive customer perception among customers (Yoo *et al.,* 2000). Over a certain period, continuous design traits could be imbued with meanings besides communicating certain identities. For instance, the continuous heritage design elements of Tong Ren Tang is associated with the Chinese Imperial Heritage (Balmer and Chen, 2017) similar to French bank Société Générale' architectural heritage representing the French culture in some extend (Bargenda, 2015). Hence, discontinuity of corporate heritage design might lead to a loss on attached meanings and receive a negative response from customers or other stakeholders as a lack of commitment to existing identity traits. According to Balmer (2012), British Airway received negative comments from its stakeholders after changing certain heritage design elements. In a similar way in their study Rindell (*et al.,* 2015) and his colleagues assert, the changes on heritage design elements made by famous Italian Scooter Company Vespa, caused negative responses from the community thinking the company lacked commitment on protecting its heritage design, which might lead losing its existing meaning. On the other hand, corporate heritage relates all of three temporal dimensions including present and future. For this reason, while maintaining heritage design companies should keep satisfying customer needs via updated functional characteristics (Beverland, 2005b). Besides its functional traits, corporate heritage design should also carry aesthetic features since many customers place significance on aesthetic while experiencing any service or product (Gentile *et al*., 2007). Certain companies with continuous corporate traits including corporate heritage design such as Luis Viton, Cartier, Porsche etc.., emphasizes the aesthetic value as part of their identity (Kapferer and Bastien, 2012).

After defining corporate heritage design antecedents, the study also validates the effect of continuous design elements via the proposed model within the traditional London taxi context after collection of 523 online surveys through social media outlets such as Facebook and Twitter. As explained in the analysis section, survey attendants mostly agreed on the continuous, familiar, functional and aesthetic design elements of traditional black cabs. Although the traditional

London cab replaced with the new models to meet the customer's needs, it has successfully maintained the corporate heritage design features. Hence, it becomes one of the most recognisable icons of London. Finally, the proposed model validates that traditional London taxi's corporate heritage design has a moderator effect on the relationships between corporate identity, national role identity, city role identity, and customer experience.

6.4. Implications for Practice

This section discusses the managerial and practical insights informed by the current study. There many companies seeking competitive advantage among rival companies. On the other hand, some of them do not seem to pay enough attention to exploiting their corporate heritage as a competitive advantage. Corporate heritage traits constructed after successive generations build trust among stakeholders as a result of continuity and stability. Hence scholars within corporate marketing recently paid attention to this emerging subject of corporate heritage.

This study proves that corporate heritage traits have an impact on consumer behaviour. Focusing on corporate heritage design, the hypotheses shows that costumers desire continuity on familiar design characteristics of traditional London taxi. Hence, managers should take continuous heritage design elements while manufacturing a new product or service. Companies already with high familiarity have a big advantage among the rivals. On top of that, the proposed model suggests that corporate heritage design communicates the associated meanings to provide improved customer experience specifically to the ones interested in more than practical design elements. The study proves that corporate heritage design strengthens the perceived meaningful augmented identities- in this study city role identity and national role identity –, which leads an increase in customer satisfaction through experience. In order to achieve these results, it requires stewardship (Burghausen and Balmer, 2014b) mindset among the managerial team to protect existing corporate heritage design. In a parallel way organisation eliminating their corporate heritage could also revitalize it in

order to seek for differentiation to build a competitive advantage. For instance, Hudson (2011) provides insights on how Cunard Cruise lines repositioned itself by reviving their corporate heritage. However, at the same time, companies should also remember satisfying customers' modern needs while protecting corporate heritage design to maintain sustainability for the future.

Some customers need more than a functional trait of a product/service provided by the companies. The reason behind that there are many other layers of customer experience. Both affective and social layer of experience can be satisfied via added meanings since customers also demand to experience those facets while using a service or product (Brakus *et al.*, 2009). At this point, another finding of the study showed the significance of augmented role identities and their impact on customer satisfaction via experience. This validates the effect of augmented role identities on customer behaviour, which was empirically shown by Balmer and Chen (2017) who found the impact of associated Chines Imperial identity with Thong Ren Tang on its customers' satisfaction. In a similar vein, this study finds that both the city and national role identity of traditional London taxi positively impacts customer satisfaction via customer experience. Hence, the managerial team of companies with associated identities should identify if there are any extra associated identities attributed to their product or service. After the identification process, companies should integrate those identities, adding extra meanings to the product/service, in their marketing and communication programs since it might receive a positive response from the customers.

As mentioned above the study validates the importance of city identity role within the traditional London taxi context. Customers consider traditional London taxi as a symbol while functioning as a transportation vehicle. They also find traditional London cabs appealing as part of London. Although the study does not reflect opinions from the other city stakeholders such as city administrators, it provides a wider scope by transcending from the company to the city. It should be noted that the study does not make a separation between locals and visitors. However, the preliminary showed that traditional London taxi defined as a tourist attraction by some visitors. Cities like companies also need to differentiate themselves from other cities to attract more stakeholders such as visitors or

investors. It can be said it requires more time and efforts to create icons representing and promoting a city comparing to meet functional needs of city stakeholders by the advance of technology. Although some icons might not fit with the newer city identity strategies (Truman *et al.*, 2006), dynamic icons such as traditional London taxi could adapt itself to those strategies. For instance, in recent years, London city administration initiated an eco-friendly program to decrease the air pollution in London. Although many other companies made an offer to produce new electric taxi vehicles as an alternative to the traditional London Cabs, the London Taxi company responded by manufacturing newer electric models while maintaining iconic design elements of the existing taxis. The move also saved a well-known London icon that reminds and promotes the city via different tools such as media, books or souvenirs. Hence, the city administrators should collaborate with this type of corporate heritage organisations to maintain its iconic features communicating city identity.

At this point the new rising taxi application UBER should be mentioned since and biggest rival of black cabs. Uber is a ride-sharing service, which could be only booked through an application which leads some car owners to provide taxi services. It is suggested that the growth of Uber like applications have increased the competition among all taxis through improving service and reducing prices (Wallsten, 2015). Hence, Uber will still attract price sensitive customers in and around London to meet their taxi service needs since it is known to offer lower fees comparing black cabs. On the other hand, traditional London taxis are unique regarding with the meanings attached to them. As this study shows black cab has augmented role identities on top of its main identity as a taxi service. Traditional London taxi is an icon which is part of both London and Britain. For that reason, it builds a platform for the different sort of stakeholders such as visitors who would like to experience London and daily part of British culture. On top of that black cabs could be a tool by the locals to express their identity as Londoner or British. In addition to that traditional black cabs are regulated by TFL and contain certain standards such as being wheelchair friendly. All these reasons provide traditional London taxis inimitable corporate heritage traits that gives competitive advantages over Uber like new taxi services. Hence, it could be said that black cabs

will survive in the future if it continues meeting modern needs of taxi users while keeping corporate heritage traits. On the other hand, it should be emphasised that this study investigates the impact of corporate heritage traits on customer experience. Further studies could look at the relationship between Uber and black cabs in detail through a comparision study.

6.5. Overall Contribution

This study contributes the corporate heritage realm in both theoretical and practical ways. The main theoretical contribution of the research is development of a new model to test the relationships among corporate heritage traits and customer behavior. Although corporate heritage traits have been in raised, it is the first study testing the impact of corporate heritage design traits on customer experience through the case of traditional London taxi. The study shows that augmented role identities, added identities attached to a corporate heritage asset on top of its main identity, in this case city and national role identity have positive relationship with the customer experience. In addition to that, the study validates that corporate heritage design elements moderate the relationships between augmented role identities and customer experience. Based on the research it is shown that corporate heritage traits are significant source of managerial contributions. Traditional black cabs attract many users because of its corporate heritage traits which give advantage over other taxis for the customers who seek meaningful taxi experience. In this case it should be considered that the daily life icons like black cabs should always reinvented to meet modern needs of taxi users while keeping main corporate heritage characteristics to sustain in the future. At this point it should be noted that black cab is a dynamic icon unlike the static icons such as buildings or landmarks. This attributes a significant advantage to the black cab as it could be synced with the new city identity objectives such as an environmental-friendly city. Since 2018, new models of traditional black cabs carry a hybrid engine to reduce the air pollution and help London being more environmental-friendly city. The study proves the impact of the city and national role identity of traditional black cabs on taxi users including locals and visitors.

Traditional black cab with corporate heritage design elements are perceived more than a taxi because of its city and national role identities that attract many taxi users. Although some locals consider it to be a tool to express their British identity, visitors think it is an attraction to be experienced since its daily part of London and British culture.Hence, it should be emphasized that both manufacturer and London city administrators must keen on preserving the continuous design elements of black cabs as it's an inimitable icon of London.

6.6. Limitations of the Research

The current study was conducted among only customers whether visitors and locals. The account of the fact that there are many other stakeholder groups regarding the London Taxi case. Hence, the study only reflects the perception from limited stakeholder groups on multiple identities of London black cab. On the other hand, the manufacturer of London Taxi (now London Electric Vehicle Company) and the managers could provide more insights on the and reflect on Actual/ Communicated/ Conceived/ Ideal/ Desired Identities of traditional London taxi (Balmer and Greyser, 2012). Besides that, even the efforts to maintain the main heritage design elements, it would broaden the study to see the managerial team and their efforts on protecting their heritage as part of corporate heritage stewardship for the future (Burghausen and Balmer, 2015).

Another important stakeholder group visa vis traditional London cab is the city administrators of London as it is one of the well-known icons strongly bonded with the city. Although in recent years there were some proposals to change completely the black cabs with other substitutes, thanks to company promise and works on new eco-friendly taxis, London has decided to keep it for now. It should be reminded that city icons could help cities to differentiate among other cities besides promoting the city to potential stakeholders as a symbol and reminder (Tasci *et al.,* 2006). On top of that, at a certain point, some cities could change their strategy in order to build/promote a new identity. At this point unlike the static icons such as landscapes without the ability to adapt those new strategies (Trueman and Cornelius, 2006). Icons such as London taxi could improve and

synchronise itself with those new strategies. For that reason, it would be quite beneficial to receive city administrators' opinions/ perceptions of the iconic black cab and its future place within London. Based on that, it should be noted that the study provides limited stakeholder groups perception. Hence if any interpretation is made on other stakeholder groups, these limitations should be considered.

Although this single case studies could be generalized to make assumptions on a phenomenon, it could be further elaborated by further research. Another restriction of the study is the research context as it only covers traditional London taxi as a case study. In addition to that, the research is also limited regarding with geographical scope since it only observes traditional London taxi within London and Britain. Other impediments with both financial and temporal conditions to widen the scope of current research through observing the company specifically the managerial point of view on the research subjects should also be considered while making any interpretation. These impediments also limited to apply more exploratory technics which could have helped to add more research related questions to study. Therefore, preliminary research is constricted with limited secondary data. Although the research reached a decent size of the sample, a bigger sample size could provide a better generalization on the research questions. In the interest of scrutiny on corporate heritage characteristics and the potential impacts on various stakeholders, further studies on different corporate heritage organisations are required. As a result, the corporate heritage facets including heritage design and augmented role identities as well as their relationship with customer behaviour should be extended by other further researches. Considering these limitations, the validation of applicability demand further researches within different research contexts.

6.7. Future Research Direction

There have been many studies adopting a customer-based approach to identify and scrutinise the notion of customer experience. It is defined as internal feelings, cognitive efforts, senses or attitudes based on customer assessment resulting from experience towards a product, service or brand

(Brakus *et al.,* 2009). One of the most well-known studies by Schmitt (1999a) has been adopted by many scholars. His study finds its base on the previous studies (Holbrook and Hirschman, 1982; Padgett and Allen, 1997) and suggests that customer behaviour, emotion and cognitive process constitutes the notion of experience. In addition to that further studies assert that customer experience plays a key role in building customer satisfaction (Brakus *et al*., 2009; Iglesias *et al*., 2011).

The current study was conducted among only customers whether visitors or locals. The account of the fact that there are many other stakeholder groups regarding the London Taxi case. Hence, the study only reflects the perception from limited stakeholder groups on multiple identities of London black cab. On the other hand, the manufacturer of London Taxi (now London Electric Vehicle Company) and the managers could provide more insights on the and reflect on Actual/ Communicated/ Conceived/ Ideal/ Desired Identities of traditional London taxi (Balmer and Greyser, 2012). Besides that, even the efforts to maintain the main heritage design elements, it would broaden the study to see the managerial team and their efforts on protecting their heritage as part of corporate heritage stewardship for the future (Burghausen and Balmer, 2015).

The notion of corporate heritage has attracted many scholars as well as practitioners. On the other hand, there is various type of corporate identity classified by Balmer and Greyser (2012) in detail. One of them is the perceived corporate identity which is independent of the company and its communication efforts. Although companies reflect their corporate identity from their point of view, stakeholder perception could be different then communicated corporate identity. The perceived corporate identity, namely Conceived corporate identity (Balmer and Greyser, 2012) could also differ among other sort of stakeholders. This study validates the Conceived corporate identity among the customers of traditional London taxi. The current research does not differentiate the customers consisting of both locals and visitors. Hence, further research could elaborate on the different perception between visitors and locals via observing a similar company with corporate heritage characteristics. In a similar vein, this could wide on how different stakeholders group perceive the added identities, augmented

role identities, associated with the organisation. Some stakeholder groups might seek more authenticity, which could lead them to focus on the augmented role identities as part of their experience. For instance, local users might focus on more of practicality and price point while the visitors might be more interested in the attached meanings to enrich their experience. This leads to requiring elaboration on the corporate heritage tourism notion. Some corporate heritage organisations attract specifically visitors/tourists thanks to their additional identities such as cultural identity, which provides them with a dual identity besides their main corpora identity (Balmer, 2017). Hence, further research could elaborate on the antecedents and consequences of corporate heritage tourism via conducting research among visitors/tourists.

The current study validates a model consisting of identities regarding the company with corporate heritage characteristics. On the other hand, there is no exploration of how corporate heritage traits affect identity at the individual level. Further research could explore if corporate heritage has an impact on customer identification with the company. Luxury companies with heritage could be a platform to explore more on this identification process.

On the other hand, the current study observes and tests the customer responses after their experience with the traditional London taxi. Hence the study does not give any reflection on customer response prior to experience. At this point, further research could scrutinise customer attitudes such as intension to use of a product/service with corporate heritage. On top of that further research could also include a comparison of customer attitude as well as behaviour between corporate heritage companies and non-corporate heritage companies. On top of that, the corporate heritage characteristics including corporate heritage design, and augmented role identities could be observed at a different level of companies such as international or family-owned companies.

6.8. Summary

The final section (Chapter 6) of the thesis discusses the hypotheses results based on the relevant literature and conceptual framework. In addition to that, theoretical contribution to the literature especially corporate heritage realm is articulated. Following that, the chapter provides practical and the managerial implications pertaining to the research subjects. Later on, the chapter informs on the limitations of the current research. Finally, the chapter concludes with suggestions on further researches.

REFERENCES

Aaker, D. (2007) 'Innovation: Brand it or lose it', *California Management Review*, 50 (1), pp. 8-24.

Aaker, D. A. (1991) Managing brand equity: capitalizing on the value of a brand name. *New York*, 28 (1), pp. 35-37.

Aaker, D. A. (2004) 'Leveraging the corporate brand', *California Management Review,* 46 (3), pp. 6–18.

Aaker, D.A. (1996) 'Measuring brand equity across products and markets', *California management review,* 38 (3), p. 102.

Abbott, L. (1955) *Quality and Competition*. Columbia University Press, New York, NY.

Abratt, R. (1989) 'A new approach to the corporate image management process', *Journal of marketing management*, *5* (1), pp. 63-76.

Abratt, R. and Kleyn, N. (2012) 'Corporate identity, corporate branding and corporate reputations: Reconciliation and integration', *European Journal of Marketing,* 46 (7/8), pp. 1048-1063.

Ahmed, S.A. and d'Astous, A. (2008) 'Antecedents, moderators and dimensions of country-of-origin evaluations', *International Marketing Review,* 25 (1), pp. 75-106

Akrich, M. (1992), 'The description of technical objects', in: Bijker W.E., Law, J. (Eds.), *Shaping Technology/Building Society: Studies in Sociotechnical Change*. The MIT Press, Cambridge, MA, pp. 205–224.

Albert, S. and Whetten, D. A. (1985) 'Organizational identity', *Research in Organizational Behavior*, 7 , pp. 263–295. Reprint in: Balmer, J. M. T. and Greyser, S. A. (eds) Revealing the corporation: Perspectives on identity, image, reputation, corporate branding, and corporate-level marketing: an anthology. London: Routledge, pp. 77–105, 2003.

Apostolakis, A. (2003), 'The convergence process in heritage tourism', *Annals of Tourism Research,* Vol. 30, pp. 795-812.

Arnold, M.J. and Reynolds, K.E., (2003) 'Hedonic shopping motivations', *Journal of retailing*, 79 (2), pp. 77-95.

Arnold, M.J., Reynolds, K.E., Ponder, N. and Lueg, J.E. (2005) 'Customer delight in a retail context: investigating delightful and terrible shopping experiences', *Journal of Business Research*, 58 (8), pp. 1132-1145.

Ashforth, B. E., & Mael, F. (1989) 'Social identity theory and the organization', *Academy of management review*, *14* (1), pp. 20-39.

Aspara, J., & Tikkanen, H. (2011) 'Corporate marketing in the stock market: The impact of company identification on individuals' investment behaviour', *European Journal of Marketing*, 45 (9/10), pp. 1446–1469.

Avison, S. (1997) 'The race to go global: brand development in new markets', Journal *of Brand Management,* 5 (1), pp. 28–39.

Babin, B.J., Darden, W.R. and Griffin, M. (1994) 'Work and/or fun: measuring hedonic and utilitarian shopping value', *Journal of consumer research,* 20 (4), pp. 644-656.

Bagozzi, R.P. (1980) *Causal models in marketing*. Wiley.

Bagozzi, R.P. and Yi, Y. (1988) 'On the evaluation of structural equation models', *Journal of the academy of marketing science*, *16* (1), pp. 74-94.

Bagozzi, R.P. and Yi, Y. (2012) 'Specification, evaluation, and interpretation of structural equation models', *Journal of the academy of marketing science,* 40 (1), pp. 8-34

Baker, M. J., & Balmer, J. M. T. (1997) 'Visual identity: trappings or substance?', *European Journal of marketing*, *31* (5/6), pp. 366-382.

Balabanis, G. and Diamantopoulos, A. (2004) 'Domestic country bias, country-of-origin effects, and consumer ethnocentrism: a multidimensional unfolding approach', *Journal of the Academy of Marketing Science,* 32 (1), p. 80.

Ballantyne, R., Warren, A. and Nobbs, K. (2006) 'The evolution of brand choice', *Journal of Brand Management*, 13 (4-5), pp. 339-352.

Balmer, J. and Greyser, S. (2003) *Revealing the corporation: Perspectives on identity, image, reputation, corporate branding and corporate level marketing*. Routledge.

Balmer, J. M. (2012) 'Corporate brand management imperatives: custodianship, credibility, and calibration', *California Management Review*, 54 (3), pp. 6–33.

Balmer, J. M. T. (2008) 'Identity based views of the corporation: Insights from corporate identity, organisational identity, social identity, visual identity, corporate brand identity and corporate image', *European Journal of Marketing,* 42 (9/10), pp. 879–906.

Balmer, J. M. T., & Greyser, S. A. (2002) 'Managing the multiple identities of the corporation', *California management review*, *44*(3), pp.72-86.

Balmer, J. M. T., & Greyser, S. A. (2006) 'Corporate marketing: Integrating corporate identity, corporate branding, corporate communications, corporate image and corporate reputation', *European Journal of Marketing*, 40 (7/8), pp. 730–741.

Balmer, J. M. T., & Soenen, G. B. (1999) 'The acid test of corporate identity management™', *Journal of marketing management*, *15* (1-3), pp. 69-92.

Balmer, J. M.T. (2013), 'Corporate heritage, corporate heritage marketing, and total corporate heritage communications', *Corporate Communications: An International Journal*, 18 (3), pp. 290 – 326

Balmer, J.M. (1998) 'Corporate identity and the advent of corporate marketing', *Journal of Marketing Management*, 14 (8), pp. 963-996.

Balmer, J.M. (2001) 'Corporate identity, corporate branding and corporate marketing-Seeing through the fog', *European journal of marketing,* 35 (3/4), pp. 248-291.

Balmer, J.M. (2011b) 'Corporate heritage brands and the precepts of corporate heritage brand management: Insights from the British Monarchy on the eve of the royal wedding of Prince William (April 2011) and Queen Elizabeth II's Diamond Jubilee (1952–2012)' *Journal of Brand Management*, *18* (8), pp. 517-544.

Balmer, J.M. (2017) 'The corporate identity, total corporate communications, stakeholders' attributed identities, identifications and behaviours continuum', *European Journal of Marketing*, 51 (9/10), pp. 1472-1502.

Balmer, J.M. 91995) 'Corporate branding and connoisseurship', *Journal of General management*, *21* (1), pp. 24-46.

Balmer, J.M. and Burghausen, M. (2015) 'Explicating corporate heritage, corporate heritage brands and organisational heritage', *Journal of Brand Management*, *22* (5), pp. 364-384.

Balmer, J.M. and Burghausen, M. (2019) 'Marketing, the past and corporate heritage', *Marketing Theory*, *19* (2), pp. 217-227.

Balmer, J.M. and Chen, W. (2016), 'Corporate heritage tourism brand attractiveness and national identity', *Journal of Product & Brand Management*, 25 (3), pp. 223-238.

Balmer, J.M. and Powell, S.M., 2011. Corporate heritage identities, corporate heritage brands and the multiple heritage identities of the British Monarchy. *European Journal of Marketing*.

Balmer, J.M.T. (2011a) 'Corporate heritage identities, corporate heritage brands and the multiple heritage identities of the British Monarchy', *European Journal of Marketing,* 45 (9-10), pp. 1380-1398.

Balmer, J.M.T. and Chen, W. (2015), 'Corporate heritage brands in China, consumer engagement with China's most celebrated corporate heritage brand – Tong Ren Tang: 同仁堂', *Journal of Brand Management,* 22 (3), pp. 194-210

Balmer, J.M.T. and Chen, W.F. (2017), 'Corporate heritage brands, augmented role identity and customer satisfaction', *European Journal of Marketing*, 51 (9/10), pp. 1-13.

Balmer, JMT. (2010) 'Explicating corporate brands and their management: Reflections and directions from 1995', *Journal of Brand Management,* 18 (3), pp. 180- 196

Barbosa, H., Calvera, A., & Branco, V. (2009) 'Portugal's First Advertising Agency: Raul de Caldevilla and the ETP, 1914-1923', *Design Issues*, 25 (1), pp. 22–35.

Bargenda, A. (2015) 'Corporate heritage brands in the financial sector: The role of corporate architecture', *Journal of Brand Management*, 22 (5), pp. 431-447.

Barnes, S.J., Mattsson, J. and Sørensen, F. (2014) 'Destination brand experience and visitor behavior: Testing a scale in the tourism context', *Annals of Tourism Research*, 48, pp. 121-139.

Beckman, E., Kumar, A. and Kim, Y.K. (2013) 'The impact of brand experience on

Beesley, M.E. (2013) 'Competition and supply in London taxis', In *Privatization, Regulation and Deregulation* (pp. 118-151). Routledge.

Bell, E., Bryman, A. and Harley, B. 2018 *Business research methods*. Oxford university press.te

Berkowitz, M. (1987) 'Product shape as a design innovation strategy', *Journal of Product Innovation Management*, 4 (4), pp. 274-283.

Bernstein, D. (1984) *Company image and reality: A critique of corporate communications*. Taylor & Francis.

Bessière, J. (1998) 'Local development and heritage: traditional food and cuisine as tourist attractions in rural areas', *Sociologia ruralis*, 38 (1), pp. 21-34

Beverland, M. L., & Luxton, S. (2005) 'Managing integrated marketing communications through strategic decoupling: How luxury wine firms retain brand leadership while appearing to be wedded to the past', *Journal of Advertising,* 34 (4), pp. 103–116

Beverland, M., Lindgreen, A., & Vink, M. W. (2008) 'Projecting authenticity through advertising: consumer judgements of advertisers' claims', *Journal of Advertising*, 37 (1), pp. 5–15.

Beverland, M.B. (2005a) 'Crafting brand authenticity: The case of luxury wines', *Journal of management studies*, 42 (5), pp. 1003-1029.

Beverland, M.B. (2005b) 'Managing the design innovation–brand marketing interface: Resolving the tension between artistic creation and commercial imperatives', *Journal of Product Innovation Management*, 22 (2), pp. 193-207.

Beverland, M.B., Napoli, J. and Farrelly, F. (2010) 'Can all brands innovate in the same way? A typology of brand position and innovation effort', *Journal of Product Innovation Management,* 27 (1), pp. 33-48.

Bhattacharya, C. B., & Sen, S. (2003) 'Consumer–company identification: A framework for understanding consumers' relationships with companies', *Journal of marketing*, *67* (2), pp. 76-88.

downtown success', *Journal of Travel Research*, 52 (5), pp. 646-658.

Blombäck, A. and Scandelius, C. (2013) 'Corporate heritage in CSR communication: a means to responsible brand image?', *Corporate Communications: An International Journal*, 18 (3), pp. 362-382.

Blombäck, A., and Brunninge, O. (2013) 'The dual opening to brand heritage in family businesses', *Corporate Communications: An International Journal*, 18 (3), pp. 327-346.

Bobbit, M. (1998) *Taxi! - The Story of the London Taxicab*. Veloce Publishing Ltd.

Bobbitt, M. (2003) *Taxi!-The Story of the London Cab*. Veloce Publishing Ltd.

Bolton, R.N. (1998) 'A dynamic model of the duration of the customer's relationship with a continuous service provider: The role of satisfaction', *Marketing science*, *17* (1), pp. 45-65.

Bolton, R.N. and Lemon, K.N. (1999) 'A dynamic model of customers' usage of services: Usage as an antecedent and consequence of satisfaction', *Journal of marketing research*, 36 (2), pp. 171-186.

Bolton, R.N, Gustafsson, A., McColl-Kennedy, J., J. Sirianni, N. and K. Tse, D. (2014) 'Small details that make big differences: a radical approach to consumption

experience as a firm's differentiating strategy', *Journal of Service Management*, *25*(2), pp.253-274.

Bordagaray, M., dell'Olio, L., Ibeas, A. and Cecín, P. (2014) 'Modelling user perception of bus transit quality considering user and service heterogeneity', *Transportmetrica A: Transport Science*, 10 (8), pp. 705-721.

Brakus, J.J., Schmitt, B.H. and Zarantonello, L. (2009) 'Brand experience: what is it? How is it measured? Does it affect loyalty?', *Journal of marketing*, 73 (3), pp. 52-68.

Brakus, J.J., Schmitt, B.H. and Zhang, S. (2014) 'Experiential product attributes and preferences for new products: The role of processing fluency', *Journal of Business Research*, 67 (11), pp. 2291-2298.

Brown, T.J. (1998) 'Corporate associations in marketing: Antecedents and consequences', *Corporate Reputation Review*, 1 (3), pp. 215-233.

Brunner, R., Emery, S. and Hall, R. (2008) *Do you matter?: how great design will make people love your company*. FT Press.

Brunninge, O. (2009) 'Using history in organizations: how managers make purposeful reference to history in strategic processes', *Journal of Organizational Change Management*, 22, pp. 8-26.

Brunninge, O. and Hartmann, B.J. (2019) 'Inventing a past: Corporate heritage as dialectical relationships of past and present', *Marketing Theory*, *19* (2), pp. 229-234.

Bryman, A. (2016) *Social research methods*. Oxford university press.

Bryman, A. and Bell, E. (2011) 'Ethics in business research', *Business Research Methods*, 7 (5), pp. 23-56.

Byrne, B. M. (2010) *Structural equation modeling with AMOS: Basic concepts, applications, and programming*. New York: Routledge.

Burghausen, M., and Balmer, J. M. (2014a) 'Corporate heritage identity management and the multi-modal implementation of a corporate heritage identity', *Journal of Business Research*, 67 (11), pp. 2311-2323.

Burghausen, M. and Balmer, J.M.T. (2014b) 'Repertoires of the corporate past: explanation and framework. Introducing an integrated and dynamic perspective', *Corporate Communications: An International Journal*, 19 (4), pp. 384-402.

Burghausen, M., & Balmer, J. M. (2015) 'Corporate heritage identity stewardship: A corporate marketing perspective', *European Journal of Marketing*, 49 (1/2), pp. 22-61.

Byrne, B.M. (2001) 'Structural equation modeling: Perspectives on the present and the future', *International Journal of Testing*, 1 (3-4), pp. 327-334.

Cacioppo, J.T. and Petty, R.E. (1982) 'The need for cognition', *Journal of personality and social psychology*, 42 (1), p. 116.

Cai, L.A. (2002) 'Cooperative branding for rural destinations', *Annals of tourism research*, 29 (3), pp. 720-742

Cairns, R.D. and Liston-Heyes, C. (1996) 'Competition and regulation in the taxi industry', *Journal of Public Economics*, *59* (1), pp. 1-15.

Carbone, L.P. and Haeckel, S.H. (1994) '*Engineering customer experiences*', *Marketing Management*, 3 (3), pp. 8-19.

Castillo-Villar, F.R. (2016) 'Urban icons and city branding development', *Journal of Place Management and Development*, 9 (3), pp. 255-268.

Cayla, J. and Eckhardt, G.M. (2008) 'Asian brands and the shaping of a transnational imagined community', *Journal of Consumer Research*, 35 (2), pp. 216-230.

Chao, P. (1998) 'Impact of country-of-origin dimensions on product quality and design quality perceptions', *Journal of Business Research*, 42 (1), pp. 1-6.

Chen, C. F., & Chen, F. S. (2010) 'Experience quality, perceived value, satisfaction and behavioral intentions for heritage tourists', *Tourism Management*, 31 (1), pp. 29-35.

Chen, Y.S., Lin, C.L. and Chang, C.H. (2014) 'The influence of greenwash on green word-of-mouth (green WOM): the mediation effects of green perceived quality and green satisfaction', *Quality & Quantity*, 48 (5), pp. 2411-2425.

Christensen, L. T., & Askegaard, S. (2001) 'Corporate identity and corporate image revisited - A semiotic perspective', *European Journal of Marketing*, 35 (3/4), pp. 292–315.

Chryssochoidis, G., Krystallis, A. and Perreas, P. (2007) 'Ethnocentric beliefs and country-of-origin (COO) effect: Impact of country, product and product attributes on Greek consumers' evaluation of food products', *European Journal of Marketing*, 41 (11/12), pp. 1518-1544.

Churchill Jr, G.A. (1979) 'A paradigm for developing better measures of marketing constructs', *Journal of marketing research*, 16(1), pp. 64-73.

Churchill, G.A. and Iacobucci, D. (2006) *Marketing research: methodological foundations.* New York: Dryden Press.

City of Greater Bendigo, (2015) 'Heritage Design Guidelines', Available at https://www.bendigo.vic.gov.au/sites/default/files/2017-04/Heritage-Design-Guidelines-1-Introduction-and-background.pdf

Clough, P., and Nutbrown, C. (2012) *A student's guide to methodology*. Sage.

Crilly, N., Moultrie, J. and Clarkson, P.J. (2004) 'Seeing things: consumer response to the visual domain in product design', *Design studies*, 25 (6), pp. 547-577.

Coakes, S.J., Steed, L.G., Coakes, S.J. and Steed, L.G. (2003) 'Multiple response and multiple dichotomy analysis', *SPSS: analysis without anguish: Version 11.0 for Windows*, pp. 215-224.

Cocco, G. (1999) *Motorcycle design and technology: how and why*. Giorgio Nada Editore.

Cohen, P., West, S.G. and Aiken, L.S. (2014) *Applied multiple regression/correlation analysis for the behavioral sciences*. Psychology Press.

Collis, J. and Hussey, R. (2013) *Business research: A practical guide for undergraduate and postgraduate students*. Macmillan International Higher Education.

Comrey, A.L. and Lee, H.B. (1992) 'Interpretation and application of factor analytic results', *Comrey AL, Lee HB. A first course in factor analysis*, *2*, p. 1992.

Cooke, C. (1997) 'Beauty as a Route to "the Radiant Future": Responses of Soviet Architecture', *Journal of Design History*, 10 (2), pp. 137–160.

Cooper, D.R. and Emory, C.W. (1995) *Business Research Methods*, Chicago: Richard D. Irwin. Inc.

Cooper, H., Merrilees, B., and Miller, D. (2015) 'Restoring luxury corporate heritage brands: From crisis to ascendency', *Journal of Brand Management* (Advance online publication 22 May 2015)

Cordell, V. (1992) 'Effects of consumer preferences for foreign sourced products', *Journal of International Business Studies*, 23 (2), pp. 251-69.

Couper, M.P. (2000) "Web surveys: A review of issues and approaches', *The Public Opinion Quarterly,* 64 (4), pp. 464-494.

Cravens, K., Oliver, E.G. and Ramamoorti, S. (2003), 'The reputation index: measuring and managing corporate reputation', *European Management Journal*, 21 (2), pp. 201-12.

Creswell, J.W. (1994) *Research design: qualitative and quantitative approaches.* Sage Publications, Thousand Oaks, Calif;London.

Creswell, J.W. (2009) *Research design: Qualitative, quantitative, and mixed methods approaches.* SAGE Publications, Incorporated.

Csikszentmihalyi, M. and Halton, E. (1981) *The meaning of things: Domestic symbols and the self*. Cambridge University Press

Cunliffe, A.L. and Alcadipani, R. (2016) 'The politics of access in fieldwork: Immersion, backstage dramas, and deception', *Organizational Research Methods*, 19 (4), pp. 535-561.

Currás-Pérez, R., Bigné-Alcañiz, E., & Alvarado-Herrera, A. (2009) 'The role of self-definitional principles in consumer identification with a socially responsible company', *Journal of Business Ethics*, 89 (4), pp. 547–564.

David, P., Kline, S. and Dai, Y. (2005) 'Corporate social responsibility practices, corporate identity, and purchase intention: A dual-process model', *Journal of Public Relations Research*, 17 (3), pp. 291-313.

David, M. and Sutton, C.D. (2011) *Social research: An introduction*. Sage.

De Carlo, M., Canali, S., Pritchard, A. and Morgan, N. (2009) 'Moving Milan towards Expo 2015: designing culture into a city brand', *Journal of Place Management and Development*, 2 (1), pp. 8-22.

De Chernatony, L. (1999) 'Brand management through narrowing the gap between brand identity and brand reputation', *Journal of marketing management*, 15 (1-3), pp. 157-179.

De Mozota, B.B. (2003) *Design management: using design to build brand value and corporate innovation*. Skyhorse Publishing Inc.

de Oña, J., de Oña, R., Eboli, L. and Mazzulla, G. (2013) 'Perceived service quality in bus transit service: a structural equation approach', *Transport Policy*, 29, pp. 219-226.

De Witte, M. and Meyer, B. (2012) 'African Heritage Design', *Civilisations*, 61 (2), pp. 43-64.

del Bosque, I.R. and San Martín, H. (2008) 'Tourist satisfaction a cognitive-affective model', *Annals of tourism research*, 35 (2), pp. 551-573.

DeVellis, R.F. (2016) *Scale development: Theory and applications (Vol. 26)*. Sage publications.

Dickson, P.R. and Ginter, J.L. (1987) 'Market segmentation, product differentiation, and marketing strategy', *The Journal of Marketing*, 51 (2), pp.1-10.

Dillman, D.A. (1978) *Mail and telephone surveys: The total design method (Vol. 19).* New York: Wiley.

Dillman, D.A. (2000) *Mail and web-based survey: The tailored design method.* NY: John Wiley & Sons.

Dowling, G.R., 1993. Developing your company image into a corporate asset. Long range planning, 26(2), pp.101-109.

Dittmar, H. (1992) *The social psychology of material possessions: To have is to be*. Harvester Wheatsheaf and St. Martin's Press.

Downey, S.M. (1986) 'The relationship between corporate culture and corporate identity', *Public Relations Quarterly*, 31 (4), pp. 7-12.

Dukerich, J. M., Golden, B. R., & Shortell, S. M. (2002) 'Beauty Is in the Eye of the Beholder: The Impact of Organizational Identification, Identity, and Image on the Cooperative Behaviors of Physicians', *Administrative Science Quarterly*, 47 (3), p. 507-533.

Eagly, A.H. and Chaiken, S. (1993) *The psychology of attitudes*. Harcourt Brace Jovanovich College Publishers.

Easterby-Smith, M. (1997) 'Disciplines of organizational learning: contributions and critiques', *Human relations*, 50 (9), pp. 1085-1113.

Easthorpe, A. (2004) *Englishness and national culture*. Routledge.

Eboli, L. and Mazzulla, G. (2011) 'A methodology for evaluating transit service quality based on subjective and objective measures from the passenger's point of view', *Transport Policy*, 18 (1), pp. 172-181.

Edwards, J. A. (1996) 'Mines and quarries: industrial heritage tourism', *Annals of Tourism Research*, 23 (2), pp. 341-363.

Elliott, G.R. and Cameron, R.C. (1994) 'Consumer perception of product quality and the country-of-origin effect', *Journal of international Marketing*, 2 (2), pp.49-62.

Ethington, P.J. and Schwartz, V.R. (2006) 'Introduction: an atlas of the urban icons project', *Urban History*, 33 (1), pp. 5-19.

Fallan, K. (2012) 'Kombi-nation: mini bicycles as moving memories', *Journal of Design History*, 26 (1), pp. 65-85.

Fallan, K. (2008) 'De-scribing design: Appropriating script analysis to design history', *Design Issues*, 24 (4), pp. 61-75.

Fallan, K., & Lees-Maffei, G. (2016) 'Real Imagined Communities: National Narratives and the Globalization of Design History', *Design Issues*, 32 (1), pp. 5–18.

Favro, D. (2006) 'The iconiCITY of ancient Rome', *Urban History*, 33 (1), pp. 20-38.

Feldman, L. P. (1969) 'Of Alphabets, Acronyms and Corporate Identity', *Journal of Marketing,* 33 (1), pp. 72–75.

Field, A. (2005) *Factor analysis using SPSS.* London: Sage.

Fionda, A.M. and Moore, C.M. (2009) 'The anatomy of the luxury fashion brand', *Journal of Brand Management*, 16 (5-6), pp. 347-363.

Fowler, F. J. (1993) *Survey Research Method. 2d ed*. Beverly Hills, Sage publications.

Fowler Jr, F.J. (2008) *Survey Research Methods.* SAGE Publications.

Fowler Jr, F.J. (2013) *Survey research methods*. Sage publications.

Forty, Adrian (1986) *Objects of Desire*. New York: Pantheon Books.

Frow, P. and Payne, A. (2007) 'Towards the 'perfect'customer experience', *Journal of Brand Management*, 15 (2), pp. 89-101.

Fuchs, C. and Diamantopoulos, A. (2010) 'Evaluating the effectiveness of brand-positioning strategies from a consumer perspective', *European Journal of Marketing*, 44 (11/12), pp. 1763-1786.

Gemser, G. and Leenders, M.A. (2001) 'How integrating industrial design in the product development process impacts on company performance', *Journal of product innovation management*, 18 (1), pp. 28-38.

Gentile, C., Spiller, N. and Noci, G. (2007) 'How to sustain the customer experience: An overview of experience components that co-create value with the customer', *European management journal*, 25 (5), pp. 395-410.

George, D. and Mallery, M. (2003) Using SPSS for Windows step by step: a simple guide and reference. 14.0 update 7th Edition. Boston: Allyn and Bacon.

George, D. and Mallery, P. (2016) *Descriptive statistics. In IBM SPSS Statistics 23 Step by Step 14th Edition*. New York: Routledge.

Golob, T.F. (2003) 'Structural equation modeling for travel behavior research', *Transportation Research Part B: Methodological*, 37 (1), pp. 1-25.

Gray, E. R., & Balmer, J. M. T. (1998) 'Managing Corporate Image and Corporate Reputation', *Long Range Planning*, 31 (5), pp. 695–702.

Green, B.C., Costa, C. and Fitzgerald, M. (2003) 'Marketing the host city: Analyzing exposure generated by a sport event', *International Journal of Sports Marketing and Sponsorship*, 4 (4), pp. 48-66.

Greenglass, G., (2015) "London's taxis accessible for everyone". http://www.openbritain.net/news/London_taxi_access.aspx (Accesed date 10 October 2017)

Gerdin, J. and Greve, J. (2004) 'Forms of contingency fit in management accounting research—a critical review', *Accounting, Organizations and Society*, 29 (3-4), pp. 303-326.

Grunig, J.E. (1993), 'Image and Substance: From Symbolic to Behavioural Relationships', *Public Relations Review*, 19 (2), pp. 121-139

Gupta, S. and Zeithaml, V. (2006) 'Customer metrics and their impact on financial performance', *Marketing science*, *25* (6), pp.718-739.

Hair, J.F., Black, W.C., Babin, B.J., Anderson, R.E. and Tatham, R.L. (1998) *Multivariate data analysis* 5th ed. Upper Saddle River, NJ: Prentice hall.

Hair, J.F., Black, W. C., Babin, B.J. and Anderson, R.E. (2010) *Multivariate data analysis, 7th ed.* New York: Pearson.

Hair Jr, J., Sarstedt, M., Hopkins, L. and G. Kuppelwieser, V. (2014) 'Partial least squares structural equation modeling (PLS-SEM) An emerging tool in business research', *European Business Review*, 26 (2), pp. 106-121.

Hakala, U., Lätti, S. and Sandberg, B. (2011) 'Operationalising brand heritage and cultural heritage', *Journal of Product & Brand Management*, 20 (6), pp. 447–456.

Hamnett, C. (2004) *Unequal city: London in the global arena*. Routledge.

Hankinson, G. and Cowking, P. (1993) *Branding in Action.* London: McGraw-Hill Book Company Limited.

Harvey, C. David (2001) 'Heritage Pasts and Heritage Presents: temporality, meaning and the scope of heritage studies', *International Journal of Heritage Studies*, 7 (4), pp. 319-338.

He, H., & Balmer, J. M. T. (2007) 'Identity studies: multiple perspectives and implications for corporate-level marketing', *European Journal of Marketing*, 41(7/8), pp. 765–785.

Henn, M., Weinstein, M. and Foard, N. (2005) *A short introduction to social research*. Sage.

Hershberger, S.L. (2003) 'The growth of structural equation modeling: 1994-2001', *Structural Equation Modeling*, 10 (1), pp. 35-46.

Hinton, P.R., McMurray, I. and Brownlow, C. (2014) *SPSS explained*. Routledge.

Hoch, S.J. and Ha, Y.W. (1986) 'Consumer learning: Advertising and the ambiguity of product experience', *Journal of consumer research*, *13* (2), pp. 221-233.

Hoek, J. and Gendall, P. (2010) 'Colors, brands, and trademarks: the marketing (and legal) problems of establishing distinctiveness', *Journal of Advertising Research*, *50* (3), pp. 316-322.

Hogg, M. A., & Terry, D. J. (2002) *Social Identity Processes in Organizational Contexts.* New York: Psychology Press.

Holak, S. L., Matveev, A. V., & Havlena, W. J. (2008) 'Nostalgia in post-socialist Russia: exploring applications to advertising strategy', *Journal of Business Research*, 61 (2), pp. 172–178.

Holbrook, Morris B. and Elizabeth C. Hirschman (1982) 'The Experiential Aspects of Consumption: Consumer Fantasies, Feelings, and Fun', *Journal of Consumer Research*, 9 (2), pp. 132–40.

Holbrook, M.B. and Zirlin, R.B. (1985) 'Artistic creation, artworks, and aesthetic appreciation: Some philosophical contributions to nonprofit marketing', *Advances in nonprofit marketing*, *1*(1), pp. 1-54

Hollebeek, L. (2011) 'Exploring customer brand engagement: definition and themes', *Journal of strategic Marketing*, 19 (7), pp. 555-573.

Holt, D.B. (1995) 'How consumers consume: A typology of consumption practices', *Journal of consumer research*, *22* (1), pp. 1-16.

Homburg, C., Wieseke, J., & Hoyer, W. D. (2009) 'Social identity and the service–profit chain', *Journal of Marketing*, 73 (2), pp. 38–54.

Hooley, G.J., Shipley, D. and Krieger, N. (1988) 'A method for modelling consumer perceptions of country of origin', *International marketing review*, *5* (3), pp. 67-76.)

Hosany, S. and Prayag, G. (2013) 'Patterns of tourists' emotional responses, satisfaction, and intention to recommend', *Journal of Business Research*, *66* (6), pp. 730-737.

Hudson, B. T. (2011) 'Brand heritage and the renaissance of Cunard', *European Journal of Marketing*, 45 (9-10), p. 1538–1556.

Hudson, B.T. and Balmer, J.M. (2013) 'Corporate heritage brands: Mead's theory of the past', *Corporate Communications: An International Journal*, *18* (3), pp. 347-361.

Huffman, C. and Houston, M.J. (1993) 'Goal-oriented experiences and the development of knowledge', *Journal of Consumer Research*, *20* (2), pp. 190-207.

Hui, M.K. and Bateson, J.E. (1991) 'Perceived control and the effects of crowding and consumer choice on the service experience', *Journal of consumer research*, *18* (2), pp. 174-184.

Iglesias, O., Singh, J.J. and Batista-Foguet, J.M. (2011) 'The role of brand experience and affective commitment in determining brand loyalty', *Journal of Brand Management*, *18* (8), pp. 570-582.

Iglesias, O., Markovic, S., Singh, J.J. and Sierra, V. (2019) 'Do customer perceptions of corporate services brand ethicality improve brand equity? Considering the roles of brand heritage, brand image, and recognition benefits', *Journal of Business Ethics*, *154* (2), pp. 441-459.

Ingenhoff, D. and Fuhrer, T. (2010) 'Positioning and differentiation by using brand personality attributes: Do mission and vision statements contribute to building a unique corporate identity?. Corporate Communications', *An International Journal*, 15 (1), pp. 83-101.

Jaccard, J. and Wan, C.K. (1996) *LISREL approaches to interaction effects in multiple regression*. Sage.

Jackson, M. (2005) "London's much-loved icons at risk" 25 April 20005, Access date 15 May 2015, http://news.bbc.co.uk/1/hi/england/london/4465191.stm

James, T. (2012) 'Replacing an icon [London bus design]', *Engineering & Technology*, 7 (8), pp. 44-46.

Jeremiah, D. (2007) *Representations of British motoring*. Manchester University Press.

Johnson, P., Buehring, A., Cassell, C. and Symon, G. (2007) 'Defining qualitative management research: an empirical investigation', *Qualitative Research in Organizations and Management: An International Journal*, *2* (1), pp. 23-42.

Joy, A. and Sherry Jr, J.F. (2003) 'Speaking of art as embodied imagination: A multisensory approach to understanding aesthetic experience', *Journal of consumer research*, *30* (2), pp. 259-282.

Juric, B. and Worsley, A. (1998) 'Consumers' attitudes towards imported food products', *Food Quality and Preference*, 9 (6), pp. 431-41.

Kaika, M. (2010) 'Architecture and crisis: re-inventing the icon, re-imag (in) ing London and re-branding the City', *Transactions of the Institute of British Geographers*, *35* (4), pp. 453-474.

Kaiser, H.F. (1974) 'An index of factorial simplicity', *Psychometrika*, *39* (1), pp. 31-36.

Kapferer, J-N. (2004) 'Building brands by rumors, in Rumours. 5th ed. Berlin: Springer.

Kapferer, J.N. and Bastien, V. (2012) *The luxury strategy: Break the rules of marketing to build luxury brands*. Kogan page publishers.

Kaplan, D. (2008) *Structural equation modeling: Foundations and extensions*. 10th ed. Sage Publications.

Karjalainen, T.M. (2007) 'It looks like a Toyota: Educational approaches to designing for visual brand recognition', *International Journal of design*, *1*(1), pp. 67-81.

Kavaratzis, M. (2004) 'From city marketing to city branding: Towards a theoretical framework for developing city brands', *Place branding*, *1* (1), pp. 58-73.

Kaynak, E. and Cavusgil, T.S. (1983) 'Consumer attitudes towards products of foreign origin: do they vary across product classes?', *International Journal of Advertising*, 2 (2), pp. 147-57.

Keller, K.L. (1993) 'Conceptualizing, measuring and managing customer based brand equity', *Journal of Marketing*, 57 (1), pp. 1-22.

Keller, K.L. (2001) *Building customer-based brand equity: A blueprint for creating strong brands*. Cambridge: Marketing Science Institute.

Keller, K.L. (2003) 'Brand synthesis: The multidimensionality of brand knowledge', *Journal of consumer research*, 29 (4), pp. 595-600.

Keller, K. L., & Richey, K. (2006) 'The importance of brand personality traits to a successful 21st century business', *Journal of Brand Management*, 14 (1–2), pp. 74–81.

Kempf, D.S. and Smith, R.E. (1998) 'Consumer processing of product trial and the influence of prior advertising: A structural modeling approach', *Journal of Marketing Research*, 35 (3), pp.325-338.

Keng, C.J., Tran, V.D. and Le Thi, T.M. (2013) 'Relationships among brand experience, brand personality, and customer experiential value', *Contemporary Management Research*, 9 (3), pp. 247-262.

Kerlinger, F.N. (1986) *Foundations of behavioural research. 3rd edn.* New York; CBS Publishing.

Kerin, R.A., Jain, A. and Howard, D.J. (1992) 'Store shopping experience and consumer price-quality-value perceptions', *Journal of retailing*, *68* (4), pp. 376-397.

Khalid, H.M. and Helander, M.G. (2004) 'A framework for affective customer needs in product design', *Theoretical Issues in Ergonomics Science*, *5* (1), pp. 27-42.

Khan, U., (2008) "Fish and chips voted no 1 in the Best of British poll." telgraph.co.uk http://www.telegraph.co.uk/news/2186214/Fish-and-chips-voted-no-1-in-the-Best-of-British-poll.html (Accessed date 9 December 2015).

Kiesler, S. and Sproull, L.S. (1986) 'Response effects in the electronic survey', *Public Opinion Quarterly*, 50 (3), pp. 402-413.

Kinard, B.R. and Hartman, K.B. (2013) 'Are you entertained? The impact of brand integration and brand experience in television-related advergames', *Journal of Advertising*, 42 (2-3), pp. 196-203.

Kim, C. K., Han, D., & Park, S.-B. (2001) 'The Effect of Brand Personality and Brand Identification on Brand Loyalty: Applying the Theory of Social Identification', *Japanese Psychological Research*, 43 (4), pp. 195–206.

Kim, J.W., Lee, F. and Suh, Y.G. (2015) 'Satisfaction and loyalty from shopping mall experience and brand personality', *Services Marketing Quarterly*, *36* (1), pp. 62-76.

Kiriakidou, O. and Millward, L.J. (1999) 'Corporate Identity: External Reality or Internal Fit. International Centre for Corporate Identity Studies', Working Paper Series, University of Strathclyde.

Kirshenblatt-Gimblett, B. (2004) 'Intangible Heritage as Metacultural Production', *Museum International*, 56 (1-2), pp. 52-65.

Kline, P. (2013) *Handbook of psychological testing*. London: Routledge.

Kline, R.B. (2011) *Principles and practice of structural equation modelling. 3rd Ed.* New York: Guildford Press.

Knapman, C. (2014) 'Is this Nissan the new face of the London taxi?' The Telegraph 6 January. Available from: <http://www.telegrapgh.co.uk>. [6 January 2014].

Koltko-Rivera, M.E. (2006) 'Rediscovering the later version of Maslow's hierarchy of needs: Self-transcendence and opportunities for theory, research, and unification', *Review of general psychology*, *10* (4), pp. 302-317.

Kotler, P. and Alexander Rath, G. (1984) 'Design: A powerful but neglected strategic tool', *Journal of business strategy*, *5* (2), pp. 16-21.

Kuenzel, S., & Vaux Halliday, S. (2008) 'Investigating antecedents and consequences of brand identification' *Journal of Product & Brand Management*, 17 (5), pp. 293–304.

Kumar, R. (2011) *Research methodology: a step-by-step guide for beginners, 3rd ed.* Los Angeles: SAGE.

Kumar, R. (2014) *Research methodology: a step-by-step guide for beginners, 4th ed*. Los Angeles: SAGE.

Kumar, M. and Garg, N. (2010) 'Aesthetic principles and cognitive emotion appraisals: How much of the beauty lies in the eye of the beholder?', *Journal of Consumer Psychology*, *20* (4), pp. 485-494.

Kumar, M. and Noble, C.H. (2016) 'Beyond form and function: Why do consumers value product design?', *Journal of Business Research*, *69* (2), pp. 613-620.

LAEI, (2010) "CO2 emissions in Greater London" London Atmospheric Emissions Inventory, Available at https://data.london.gov.uk/dataset/london-atmospheric-emissions-inventory-2013

Latour, B. (2005) *Reassembling the social: An introduction to actor-network-theory*. Oxford university press.

Laws, E., (1995) *Managing Packaged Tourism.* London: International Thomson Business Press.

Lazar, J. and Preece, J. (1999) 'Designing and implementing web-based surveys', *The Journal of Computer Information Systems,* 39 (4), pp. 63- 67.

Lehmann, D.R., Keller, K.L. and Farley, J.U. (2008) 'The structure of survey-based brand metrics', *Journal of International Marketing*, *16* (4), pp. 29-56.

Leigh, J. H., and Gabel, T. G. (1992) 'Symbolic interactionism: Its effects on consumer behavior and implications for marketing strategy', *Journal of Consumer Marketing*, *9* (1), pp. 27-38.

Leigh, T.W., Peters, C. and Shelton, J. (2006) 'The consumer quest for authenticity: The multiplicity of meanings within the MG subculture of consumption', *Journal of the Academy of Marketing Science*, *34* (4), pp. 481-493.

Lemke, F., Clark, M. and Wilson, H. (2011) 'Customer experience quality: an exploration in business and consumer contexts using repertory grid technique', *Journal of the Academy of Marketing Science*, *39* (6), pp. 846-869

Lemon, K.N. and Verhoef, P.C. (2016) 'Understanding customer experience throughout the customer journey', *Journal of Marketing*, *80* (6), pp. 69-96.

Lewalski, Z.M. (1988) *Product esthetics: An interpretation for designers*. Design & Development Engineering PR.

Levc.com (2017) "Get an overview of London EV Company on levc.com" http://www.levc.com/corporate/our-vision/ (Accessed date 1 November 2017).

Loewy, R. (1942) 'Selling through design', *Journal of the Royal Society of Arts*, *90* (4604), pp. 92-103.

Low, G.S. and Lamb Jr, C.W. (2000) 'The measurement and dimensionality of brand associations', *Journal of Product & Brand Management*, 9 (6), pp. 350-370.

Lowenthal, D. (1998) *The Heritage Crusade and the Spoils of History*. Cambridge: Cambridge University Press.

Luchs, M. and Swan, K.S. (2011) 'Perspective: The emergence of product design as a field of marketing inquiry', *Journal of Product Innovation Management*, *28* (3), pp. 327-345.

Macdonald, S. (2006) 'Undesirable heritage: Fascist material culture and historical consciousness in Nuremberg', *International Journal of Heritage Studies*, *12* (1), pp. 9-28.

Mael, F., & Ashforth, B. E. (1992) 'Alumni and their alma mater: A partial test of the reformulated model of organizational identification', *Journal of Organizational Behavior*, 13 (2), 103–123.

Maguire, E.A., Woollett, K. and Spiers, H.J. (2006) 'London taxi drivers and bus drivers: a structural MRI and neuropsychological analysis', *Hippocampus*, *16* (12), pp. 1091-1101.

Maguire, E.A., Frackowiak, R.S. and Frith, C.D. (1997) 'Recalling routes around London: activation of the right hippocampus in taxi drivers', *Journal of neuroscience*, *17* (18), pp. 7103-7110.

Maier, C.D. and Andersen, M.A. (2017) 'Strategic internal communication of corporate heritage identity in a hypermodal context', *Corporate Communications: An International Journal*, *22* (1), pp. 36-59.

MailOnline, (2014) "The top 50 things we love about Britain revealed (and even the weather and the BBC get a mention)", Daily Mail Online. http://www.dailymail.co.uk/travel/article-2655092/The-50-things-love-Britain-revealed-weather-BBC-mention.html (Accessed date 10 July 2015).

Margulies, W. P. (1970) 'Custom control of corporate identity: Realistic system required', *Business Horizons*, 13 (1), pp. 31–36.

Marín, L., & Maya, S. R. De. (2013) 'The Role of Affiliation, Attractiveness and Personal Connection in Consumer-Company Identification', *European Journal of Marketing*, 47 (3), pp. 655–673.

Markwick, N. and Fill, C. (1997) 'Towards a framework for managing corporate identity', *European Journal of marketing*, 31 (5/6), pp. 396-409.

Maruyama, G., (1997) *Basics of structural equation modeling*. Sage.

Mascarenhas, O.A., Kesavan, R. and Bernacchi, M. (2006) 'Lasting customer loyalty: a total customer experience approach', *Journal of consumer marketing*, *23* (7), pp. 397-405.

Massey, R. (2014) "The black cab goes green! Nissan launches new taxi for capital with claim its petrol engine will be cleaner than diesel rivals", The Daily Mail 6 January. Available from: <http://dailymail.co.uk>. [6 January 2014].

McAlexander, J.H., Schouten, J.W. and Koenig, H.F. (2002) 'Building brand community', *Journal of Marketing*, 66 (1), pp. 38-54.

McCoy, S. and Marks, P. (2001) 'Using electronic surveys to collect data: Experiences from the field', AMCIS 2001 Proceedings, p.290.

McDaniel, C. and Gates, R. (2012) *Marketing research essentials.* Wiley Global Education.

Melewar, T.C. (2003) 'Determinants of the corporate identity construct: a review of the literature', *Journal of marketing Communications*, 9 (4), pp. 195-220.

Melewar, T. C., & Karaosmanoglu, E. (2006) 'Seven dimensions of corporate identity: A categorisation from the practitioners' perspectives', *European Journal of Marketing*, 40 (7/8), pp. 846–869.

Melewar, T.C. and Saunders, J. (1999) 'International corporate visual identity: standardisation or localisation?', *Journal of International Business Studies,* 30 (3), pp. 583–98.

Merchant, A. and Rose, G.M. (2013) 'Effects of advertising-evoked vicarious nostalgia on brand heritage', *Journal of Business Research*, 66 (12), pp. 2619-2625.

Merrilees, B., Miller, D. and Herington, C. (2013) 'City branding: A facilitating framework for stressed satellite cities', *Journal of Business Research*, *66* (1), pp. 37-44.

Meyer, C. and Schwager, A. (2007) 'Customer experience', *Harvard business review*, *85* (2), pp. 116-126.

Milligan, J.W. (1995) 'Are banks ready for product branding?', *United States Banker*, *105* (April), pp. 39-41

Millington, A. (2017) "The 30 most visited cities around the world in 2017" Avaliable at http://uk.businessinsider.com/the-most-visited-cities-around-the-world-in-2017-2017-9/#30-johannesburg-south-africa-48-million-international-visitors-1 (Accesed 15 October 2017).

Misiura, S. (2006) *Heritage Marketing.* Oxford: Butterworth-Heinemann.

Mizik, N. and Jacobson, R. (2003) 'Trading off between value creation and value appropriation: The financial implications of shifts in strategic emphasis', *Journal of marketing*, 67 (1), pp. 63-76.

Mohd Yasin, N., Nasser Noor, M. and Mohamad, O. (2007) 'Does image of country-of-origin matter to brand equity?', *Journal of Product & brand management*, 16 (1), pp. 38-48.

Moingeon, B. and Ramanantsoa, B. (1997) 'Understanding corporate identity: the French school of thought', *European Journal of Marketing*, 31 (5/6), pp. 383-395.

Moncrieffe, M. and Moncrieffe, A. (2019) 'An examination of imagery used to represent fundamental British values and British identity on primary school display boards', *London Review of Education*, 17 (1), pp. 52-69.

Monnet, J. (2006) 'The geopolitics of visibility: Urban icons in contemporary Mexico City', in Philip J. Ethington & Vanessa Schwartz (Eds.), *Atlas of urban icons: Studies in urban visual history. Multimedia Companion to Special Issue of Urban History*, 33(1).

Montgomery, A. (2015) "Red phone box voted "greatest British design" Available at https://www.designweek.co.uk/issues/16-22-march-2015/red-phone-box-voted-greatest-british-design/ (Access date, 10 November 2015)

Mono, R. (1997) *Design for product understanding: The aesthetics of design from a semiotic approach*. Stockholm: Liber AB.

Moore, A.T. and Balaker, T. (2006) 'Do economists reach a conclusion on taxi deregulation?', *Econ Journal Watch*, *3* (1), p. 109.

Morhart, F., Malär, L., Guevremont, A., Girardin, F. and Grohmann, B. (2015) 'Brand authenticity: An integrative framework and measurement scale' *Journal of Consumer Psychology*, 25 (2), pp. 200-218.

Mourato, S., Saynor, B., & Hart, D. (2004) 'Greening London's black cabs: a study of driver's preferences for fuel cell taxis', *Energy Policy*, 32 (5), pp. 685-695.

Munro, Bill. (2014) *London Taxis- A full history.* Earlswood Press.

Myers, J.E. and Sweeney, T.J., (2008) 'Wellness counseling: The evidence base for practice', *Journal of Counseling & Development*, 86 (4), pp. 482-493.

Nambisan, S. and Baron, R.A. (2007) 'Interactions in virtual customer environments: Implications for product support and customer relationship management', *Journal of interactive marketing*, 21(2), pp. 42-62.

Nambisan, S. and Baron, R.A. (2009) 'Virtual customer environments: testing a model of voluntary participation in value co-creation activities', *Journal of product innovation management*, 26 (4), pp. 388-406.

Narotzky, V. (2009) 'Selling the Nation: Identity and Design in 1980s Catalonia', *Design Issues*, 25 (3), pp. 62–75.

Netemeyer, R.G., Krishnan, B., Pullig, C., Wang, G., Yagci, M., Dean, D., Ricks, J. and Wirth, F. (2004) 'Developing and validating measures of facets of customer-based brand equity', *Journal of Business Research*, 57 (2), pp. 209-224.

Newman, C. (2013) "Taxi! The London Black Cab Will Keep Rolling Along". Accessed 23 September, 2015 https://news.nationalgeographic.com/news/2013/13/130324-london-black-cabs-british-icon-taxi/

Noble, C.H. and Kumar, M. (2010) 'Exploring the appeal of product design: A grounded, value-based model of key design elements and relationships', *Journal of Product Innovation Management*, *27* (5), pp. 640-657.

Normann, R. (1970) *A personal quest for methodology* (Vol. 19). Swedish Institute for administrative Research.

Nueno, J.L. and Quelch, J.A. (1998) 'The mass marketing of luxury', *Business Horizons*, *41* (6), pp. 61-68.

Nunnally, J.C. and Bernstein, I.H. (1994) *Psychological theory,* New York, NY: MacGraw-Hill.

Nysveen, H. and Pedersen, P.E. (2014) 'Influences of cocreation on brand experience', *International Journal of Market Research*, *56* (6), pp. 807-832.

Nysveen, H., Pedersen, P.E. and Skard, S. (2013) 'Brand experiences in service organizations: Exploring the individual effects of brand experience dimensions', *Journal of Brand Management*, *20* (5), pp. 404-423.

Urde, M. (2003) 'Core value-based corporate brand building', *European Journal of marketing*, *37* (7/8), pp. 1017-1040.

Urde, M., Greyser, S. A., and Balmer, J. M. T. (2007) 'Corporate brands with a heritage', *Brand Management*, 15 (1), pp. 4–19.

Okonkwo, U. (2007) 'What's in a name? The history of luxury fashion branding' In *Luxury Fashion Branding* (pp. 13-58). London: Palgrave Macmillan,

Olins, W. (1978) *The corporate personality : an inquiry into the nature of corporate identity.* New York: Mayflower Books.

Oliver, R.L. (1980) 'A cognitive model of the antecedents and consequences of satisfaction decisions', *Journal of marketing research*, 17 (4), pp. 460-469.

Oliver, R.L. (1993) 'Cognitive, affective, and attribute bases of the satisfaction response', *Journal of consumer research*, *20* (3), pp. 418-430.

Oliver, R.L. (1999) 'Whence consumer loyalty?', *Journal of Marketing*, 63 (4), pp. 33-44.

Oliver, J. and Eales, K. (2008) 'Research ethics: Re-evaluating the consequentialist perspective of using covert participant observation in management research', *Qualitative Market Research: An International Journal*, *11* (3), pp. 344-357.

Page, S.J. (1999) *Transport and Tourism*. Harlow: Addison Wesley Longman.

Olson, E.M., Cooper, R. and Slater, S.F. (1998) 'Design strategy and competitive advantage', *Business Horizons*, *41* (2), pp. 55-62.

Orlikowski, W.J. and Baroudi, J.J. (1991) 'Studying information technology in organizations: Research approaches and assumptions', *Information systems research*, *2* (1), pp. 1-28.

Palmer, C. (2005) 'An ethnography of Englishness: Experiencing identity through tourism', *Annals of Tourism Research*, 32 (1), pp. 7-27.

Pappu, R., Quester, P.G. and Cooksey, R.W. (2005) 'Consumer-based brand equity: improving the measurement–empirical evidence', *Journal of Product & Brand Management*, 14 (3), pp. 143-154.

Parasuraman, A., Valarie A. Zeithaml, and Leonard L. Berry., 1986. SERVQUAL: A Multiple-Item Scale for Measuring Consumer Perceptions of Service Quality. Cambridge, Massachusetts: Marketing Science Institute.

Pecot, F., Merchant, A., Valette-Florence, P. and De Barnier, V. (2018) 'Cognitive outcomes of brand heritage: A signaling perspective', *Journal of Business Research*, *85*, pp. 304-316.

Pecot, F. and De Barnier, V. (2018) 'Brands using historical references: a consumers' perspective', *Journal of Brand Management*, *25* (2), pp. 171-184.

Person, O. and Snelders, D., 2010. Brand styles in commercial design. *Design Issues*, *26*(1), pp.82-94.

Phillip H. Carter. (2006). Keeping Place: Heritage-Based Urban Design Guidelines for Downtown Burlington. Retrieved from https://www.burlington.ca/uploads/92/635575154691546768.pdf

Pine, Joseph B., II, and James H. Gilmore (1999), The Experience Economy: Work Is Theatre and Every Business a Stage. Cambridge, MA: Harvard Business School Press.

Pinsonneault, A. and Kraemer, K., 1993. Survey research methodology in management information systems: an assessment. Journal of management information systems, 10(2), pp.75-105.

Piron, F. (2000) Consumers' perceptions of the country of origin effect on purchasing intentions of (in) conspicuous products. Journal of Consumer Marketing 17(4), 30–9.

Pitkow, J.E. and Kehoe, C.M., 1996. Emerging trends in the WWW user population. Communications of the ACM, 39(6), pp.106-108.

Preziosi, D. ed., 2009. The art of art history: a critical anthology. Oxford University Press, USA.

Rainisto, S. K. (2003) 'Success factors of place marketing: A study of place marketing practices in northern Europe and the United States', doctoral dissertation, Helsinki University of Technology, Institute of Strategy and International Business, Finland.

Ramanantsoa, B. and Thiery-Basle, C., 1989. Histoire et identité de l'entreprise. Revue Française de Gestion, 107.

Rapport, N. (2002), British Subjects: An Anthology of Britain, Routledge, London.

Recker, J., 2012. Scientific research in information systems: a beginner's guide. Springer Science & Business Media.

Rindell, A., Santos, F.P. and de Lima, A.P., 2015. Two sides of a coin: Connecting corporate brand heritage to consumers' corporate image heritage. *Journal of Brand Management*, *22*(5), pp.467-484.

Robbins, D., 2003. Public transport as a visitor attraction. *Managing visitor attractions: New directions*, p.86.

Robinson, P.K. and Hsieh, L., 2016. Reshoring: a strategic renewal of luxury clothing supply chains. *Operations Management Research*, *9*(3-4), pp.89-101.

Rose, S., Hair, N. and Clark, M., 2011. Online customer experience: A review of the business-to-consumer online purchase context. *International Journal of Management Reviews*, *13*(1), pp.24-39.

Rose, S., Clark, M., Samouel, P. and Hair, N., 2012. Online customer experience in e-retailing: an empirical model of antecedents and outcomes. *Journal of Retailing*, *88*(2), pp.308-322.

Rowden, M., 2017. The Art of Identity: Creating and Managing a Successful Corporate Identity: Creating and Managing a Successful Corporate Identity. Routledge.

Santos, F.P., Burghausen, M. and Balmer, J.M., 2016. Heritage branding orientation: The case of Ach. Brito and the dynamics between corporate and product heritage brands. *Journal of Brand Management*, *23*(1), pp.67-88.

Saunders, M., Lewis, P. & Thornhill, A. 2016, Research methods for business students, Seventh edn, Pearson Education Limited, Harlow, Essex.

Schmidt, K. (1995) The Quest for Identity. London: Cassell

Schmitt, B. H., Simonson, A., & Marcus, J. (1995). Managing corporate image and identity. Long Range Planning, 28(5), 82–92.

Schmitt, Bernd H. (1999a), Experiential Marketing. New York: The Free Press

Schmitt, B., 1999b. Experiential marketing: A new framework for design and communications. *Design Management Review*, *10*(2), pp.10-16.

Schmitt, B.H., 2008. A framework for managing customer experiences. Handbook on Brand and Experience Management, pp.113-31.

Schmitt, B., Joško Brakus, J. and Zarantonello, L., 2015. From experiential psychology to consumer experience. *Journal of Consumer Psychology*, *25*(1), pp.166-171.

Schroeder, J.E., 2009. The cultural codes of branding. Marketing Theory, 9(1), pp.123-126.

Schroeder, J., Borgerson, J. and Wu, Z., 2017. A brand culture approach to Chinese cultural heritage brands. In *Advances in Chinese Brand Management* (pp. 80-106). Palgrave Macmillan, London.

Seale, C., 2004. Validity, reliability and the quality of research. Researching society and culture, pp.71-83.

Sekaran, U., 2000. Scientific investigation. *Research Methods for Business: A skill building approach*, *3*, pp.19-35.

Sekaran, U. and Bougie, R., 2016. Research methods for business: A skill building approach. John Wiley & Sons.

Selame, E., & Selame, J. (1975). Developing a corporate identity : how to stand out in the crowd. Chain Store Pub. Corp.

Shaw, P. (1984). Tradition and Innovation: The Design Work of William Addison Dwiggins. Design Issues, 1(2), 26–41.

Shee, P.S.B. and Abratt, R., 1989. A new approach to the corporate image management process. Journal of marketing management, 5(1), pp.63-76.

Sheehan, K.B. and Hoy, M.G., 1999. Using e-mail to survey Internet users in the United States: Methodology and assessment. Journal of Computer-Mediated Communication, 4(3), pp.0-0.

Simon, H.A., 2013. Administrative behavior. Simon and Schuster.

Simon, C., Brexendorf, T.O. and Fassnacht, M., 2013. Creating online brand experience on facebook. *Marketing Review St. Gallen*, *30*(6), pp.50-59.

Simpson, M. (1988) Introduction. In M. Simpson (ed.), Corporate Identity: Name, Image and Perception. New York: The Conference Board, pp. 1–2.

Skapinker, M 2014, 'London must hang on to its real taxis' , Financial Times 12 February. Available from: <http://ft.com >. [12 February 2014].

Sklair, L., 2010. Iconic architecture and the culture-ideology of consumerism. *Theory, Culture & Society*, *27*(5), pp.135-159.

Skok, W., 2000. Managing knowledge within the London taxi cab service. *Knowledge and Process Management*, *7*(4), p.224.

Skok, W. and Tissut, M. (2003) 'Managing change: the London taxi cabs case study', *Strategic Change*, *12* (2), pp. 95-108.

Skok, W. and Baird, S. (2005) 'Strategic use of emerging technology: The London taxi cab industry', *Strategic Change*, *14* (6), pp. 295-306.

Smith, R.C., 2003. Analytic strategies for oral history interviews. Postmodern interviewing, pp.203-224.

Smith, N.C., 2014. *Morality and the Market (Routledge Revivals): Consumer Pressure for Corporate Accountability*. Routledge.

Smith, D. and Langfield-Smith, K., 2004. Structural equation modeling in management accounting research: critical analysis and opportunities. Journal of Accounting Literature, 23, p.49.

Snelders, D. and Schoormans, J. P. L. (2004) 'An Exploratory Study of the Relation between Concrete and Abstract Product Attributes', Journal of Economic Psychology, 25(6), 803–20.

Stake, R.E., 1995. *The art of case study research*. Sage.

Stanfield, P., 1992. Heritage Design: The Harley-Davidson Motor Company. *Journal of Design History*, *5*(2), pp.141-155.

Stevens, J.P., 2012. Applied multivariate statistics for the social sciences. Routledge.

Storry, M. and Childs, P. eds., 2016. *British cultural identities*. Taylor & Francis.

Stuart, K., Mednick, M. and Bockman, J., 2000. Structural equation model of customer satisfaction for the New York City subway system. *Transportation Research Record: Journal of the Transportation Research Board*, (1735), pp.133-137.

Suh, Y.K., Gartner, W.C., 2004. Preferences and trip expenditures – a conjoint analysis of visitors to Seoul, Korea. Tourism Management 25 (1), 127–137.

Supphellen, M. and Rittenburgh, T. (2001), "Consumer ethnocentrism when foreign products are better", Psychology and Marketing, Vol. 18 No. 9, pp. 907-27.

Swoboda, W.J., Mühlberger, N., Weitkunat, R. and Schneeweiß, S., 1997. Internet surveys by direct mailing: An innovative way of collecting data. Social Science Computer Review, 15(3), pp.242-255.

Tasci, A.D. and Kozak, M., 2006. Destination brands vs destination images: Do we know what we mean?. *Journal of vacation marketing*, *12*(4), pp.299-317.

Tajfel, H., & Turner, J. (1979). An integrative theory of intergroup conflict. In The Social Psychology of Intergroup Relations (pp. 33–47). http://doi.org/10.1016/S0065-2601(05)37005-5

Tajfel, H., & Turner, J. C. (1985). The social identity theory of intergroup behavior. In Psychology of Intergroup Relations (pp. 7–24). http://doi.org/10.1111/j.1751-9004.2007.00066.x

Tanur, J.M., 1982. Quality of Statistical Education: Should ASA Assist or Assess?. The American Statistician, 36(2), pp.90-93.

Teo, T. and Khine, M.S., 2009. *Structural equation modeling in educational research*. Sense Publ..

Thompson, K. and Schofield, P., 2007. An investigation of the relationship between public transport performance and destination satisfaction. *Journal of transport geography*, *15*(2), pp.136-144.

Tollenaar, A. and Meihuizen, J., 2016. No Future Without a Past: The Dutch National Design Archive (NDA). *Journal of Design History*, *29*(3), pp.287-295.

Tracey, R., 2015. "Saving and icon" http://glaconservatives.co.uk/wp-content/uploads/2015/12/saving-an-icon.pdf

Transport Emissions Roadmap, September 2014. http://content.tfl.gov.uk/transport-emissions-roadmap.pdf

Trueman, M. and Cornelius, N., 2006. *Hanging Baskets Or Basket Cases?: Managing the Complexity of City Brands and Regeneration*. University of Bradford, School of Management.

Tull, D.S. and Hawkins, D.I., 1990. Qualitative Research. *Marketing Research,*

Measurement, and Method, Macmillan Publishing, New York, NY, pp.391-414.

TURBAN, D. B., & GREENING, D. W. (1997). CORPORATE SOCIAL PERFORMANCE AND ORGANIZATIONAL ATTRACTIVENESS TO PROSPECTIVE EMPLOYEES. Academy of Management Journal, 40(3), 658–672. http://doi.org/10.2307/257057

Turner, J. C. (1985). Social categorization and the selfconcept: A social cognitive theory of group behavior. In Advances in group processes (Vol., 2) (pp. 77–122).

Turner, J. C., Hogg, M. A., Oakes, P. J., Reicher, S. D., & Wetherell, M. S. (1987). A self-categorization theory. In Rediscovering the Social Group: A Self-Categorization Theory (pp. 42–67).

Tynan, C., McKechnie, S. and Chhuon, C., 2010. Co-creating value for luxury brands. *Journal of Business Research*, *63*(11), pp.1156-1163.

Urde, M., Greyser, S.A. and Balmer, J.M., 2007. Corporate brands with a heritage. *Journal of Brand Management*, *15*(1), pp.4-19.

Urde, M. and Greyser, S.A., 2015. The Nobel Prize: The identity of a corporate heritage brand. *Journal of Product & Brand Management*, *24*(4), pp.318-332.

Urry, J. and Larsen, J., 2011. *The tourist gaze 3.0*. Sage.

Wallsten, S., 2015. The competitive effects of the sharing economy how is Uber changing taxis. *Technology Policy Institute*, *22*, pp.1-21.

Watson, J. and Wright, K. (2000), "Consumer ethnocentrism and attitudes towards domestic and foreign products", *European Journal of Marketing*, Vol. 34 Nos 9/10, pp. 1149-66.

Watson, T.J., 2001. *In search of management: Culture, chaos and control in managerial work*. Cengage Learning EMEA.

Watt, J.H., 1999. Internet systems for evaluation research. New Directions for Evaluation, 1999(84), pp.23-43.

Weerawardena, J., O'Cass, A. and Julian, C., 2006. Does industry matter? Examining the role of industry structure and organizational learning in innovation and brand performance. Journal of business research, 59(1), pp.37-45.

Weible, R. and Wallace, J., 1998. Cyber research: The impact of the Internet on data collection. Marketing Research, 10(3), p.19.

Westbrook, R.A. and Oliver, R.L., 1991. The dimensionality of consumption emotion patterns and consumer satisfaction. *Journal of consumer research*, *18*(1), pp.84-91.

Whetten, D.A. and Mackey, A., 2002. A social actor conception of organizational identity and its implications for the study of organizational reputation. *Business & Society*, *41*(4), pp.393-414.

Whitney, D.E., 1988. Manufacturing by design. *Harvard Business Review*, *66*(4), pp.83-91.

Wiedmann, K.P., 1988. Corporate identity als Unternehmensstrategie. Wirtschaftswissenschaftliches Studium, 17(5), pp.236-242.

Wiedmann, K. P., Hennigs, N., Schmidt, S., and Wuestefeld, T. (2011a) The importance of brand heritage as a key performance driver in marketing management. Journal of Brand Management. 19 (3). p.182-194.

Wiedmann, K. P., Hennigs, N., Schmidt, S., and Wuestefeld, T. (2011b) Drivers and outcomes of brand heritage: consumers' perception of heritage brands in the automotive industry. The Journal of Marketing Theory and Practice. 19 (2). p. 205-220.

Williams, R., 2001. *The long revolution* (Vol. 1253). Broadview Press.

Wolff Olins (Firm), W. O. (1995). The new guide to identity : how to create and sustain change through managing identity. Design Council/Gower.

Wood, L., 2000. Brands and brand equity: definition and management. Management decision, 38(9), pp.662-669.

Wright, S., 1960. Path coefficients and path regressions: alternative or complementary concepts?. Biometrics, 16(2), pp.189-202.

Wuestefeld, T., Hennigs, N., Schmidt, S. and Wiedmann, K.P., 2012. The impact of brand heritage on customer perceived value. *der markt*, *51*(2-3), pp.51-61

Van Rekom, J., 1993. Corporate identity-its measurement and use in corporate communications. In Proceedings of the European Marketing Association Conference (pp. 1497-1514).

van Rekom, J. (1997). Deriving an operational measure of corporate identity. European Journal of Marketing, 31(5/6), 410–422. http://doi.org/10.1108/eb060640

van Riel, C. B. M. (1992). Corporate communication in European financial institutions. Public Relations Review, 18(2), 161–175. http://doi.org/10.1016/0363-8111(92)90007-L

Van Riel, C.B., 1995. Principles of corporate communication. Prentice Hall.

van Riel, C. B. M., & Balmer, J. M. T. (1997). Corporate identity: the concept, its measurement and management. European Journal of Marketing, 31(5/6), 340–355. http://doi.org/10.1108/eb060635

Verganti, R. 2008. Design, meanings, and radical innovation: A metamodel and a research agenda. Journal of Product Innovation Management 25 (5): 436–56

Verhoef, P.C., Lemon, K.N., Parasuraman, A., Roggeveen, A., Tsiros, M. and Schlesinger, L.A., 2009. Customer experience creation: Determinants, dynamics and management strategies. *Journal of retailing*, *85*(1), pp.31-41.

Veryzer Jr, R.W. and Hutchinson, J.W., 1998. The influence of unity and prototypicality on aesthetic responses to new product designs. *Journal of consumer research*, *24*(4), pp.374-394.

Vetter, F., 1985. Crite`res de definition du tourisme des grandes me´tropoles. In: Vetter, F. (Ed.), Big City Tourism. Dietrich Reimer Verlag, Berlin, pp. 26–30.

Vihma, S., 1995. *Products as representations: A semiotic and aesthetic study of design* products (Vol. 14). Helsinki: University of Art and Design.

Virgo, B. and De Chernatony, L., 2006. Delphic brand visioning to align stakeholder buy-in to the City of Birmingham brand. Journal of Brand Management, 13(6), pp.379-392.

Visitbritain.com 2017, How to be a true Londoner, Tuesday 12 September 2017 (Accessed ; 10 January 2018) https://www.visitbritain.com/gb/en/how-be-true-londoner#pbujBmICgkvdGy9b.99

Yi, Y., 1990. A critical review of consumer satisfaction. *Review of marketing*, *4*(1), pp.68-123.

Yin, R.K. (1994), *Case Study Research: Design and Methods*, Sage Publications, Thousand Oaks, CA.

Yoo, B., Donthu, N. and Lee, S., 2000. An examination of selected marketing mix elements and brand equity. Journal of the academy of marketing science, 28(2), pp.195-211.

Yun, G.W. and Trumbo, C.W., 2000. Comparative response to a survey executed by post, e-mail, & web form. Journal of Computer-Mediated Communication, 6(1), pp.0-0.

Zarantonello, L. and Schmitt, B.H., 2010. Using the brand experience scale to profile consumers and predict consumer behaviour. *Journal of Brand Management*, *17*(7), pp.532-540.

Zeithaml, V.A., 1988. Consumer perceptions of price, quality, and value: a means-end model and synthesis of evidence. The Journal of marketing, pp.2-22.

Zhiyan, W., Borgerson, J. and Schroeder, J., 2013. From Chinese brand culture to global brands: Insights from aesthetics, fashion and history. Springer.

Zikmund, W.G., Babin, B.J., Carr, J.C. and Griffin, M., 2013. Business research

methods. Cengage Learning.

APPENDIX

Consent Form

The participant should complete the whole of this sheet	Please tick the appropriate box	
	YES	
Have you read the Research Participant Information Sheet?	☐	☐
Have you had an opportunity to ask questions and discuss this study?	☐	☐
Have you received satisfactory answers to all your questions?	☐	☐
Who have you spoken to?		
Do you understand that you will not be referred to by name in any report concerning the study?	☐	☐
Do you understand that you are free to withdraw from the study:		
• at any time?	☐	☐
• without having to give a reason for withdrawing?	☐	☐
• without affecting your future care?	☐	☐
I agree to my interview being recorded.	☐	☐
I agree to the use of non-attributable direct quotes when the study is written up or published.	☐	☐
Do you agree to take part in this study?	☐	☐
Signature of Research Participant:		
Date:		
Name in capitals:		
Witness statement		
I am satisfied that the above-named has given informed consent.		
Witnessed by:		
Date:		
Name in capitals:		

Researcher name:	**Signature:**
Supervisor name:	**Signature:**

Survey

Traditional London taxi
Welcome to Traditional London taxi survey

1. What is your age? *

- [ ] under 18
- [ ] 18-24
- [ ] 25-34
- [ ] 35-54
- [ ] 55+

2. What is your gender? *

- [ ] Male
- [ ] Female

3. What is your yearly income level? *

- [ ] Less than £12,999
- [ ] £13,000 to £25,999
- [ ] £26,000 to £47,999
- [ ] £48,000 to £63,999
- [ ] £64,000 or more

4. What is your highest level of education? *

- [ ] High School
- [ ] Bachelor's Degree
- [ ] Master's Degree
- [ ] Doctoral Degree
- [ ] N/A

5. How many times have you used traditional Black cab? *

- [ ] 1
- [ ] 2 - 5
- [ ] 6 - 10
- [ ] more than 10

6. Please select your answer for the following statements. London Taxi vehicle: *

	Strongly Disagree	Disagree	Neutral	Agree	Strongly Agree
looks like it is produced to a high standard	☐	☐	☐	☐	☐
provides high quality taxi ride	☐	☐	☐	☐	☐
is one of the best among taxis	☐	☐	☐	☐	☐
is very reliable	☐	☐	☐	☐	☐

7. Please select your answer for the following statements. Traditional London taxi: *

	Strongly Disagree	Disagree	Neutral	Agree	Strongly Agree
has a long history	☐	☐	☐	☐	☐
has been around for a long time	☐	☐	☐	☐	☐
is unique comparing to other taxis	☐	☐	☐	☐	☐
is different than other taxis because of its long history and heritage	☐	☐	☐	☐	☐
is different from other taxis because of its continuous design elements	☐	☐	☐	☐	☐

8. The country (UK) from which London Taxi originates: *

	Strongly Disagree	Disagree	Neutral	Agree	Strongly Agree
is innovative in manufacturing	☐	☐	☐	☐	☐
is good on designing	☐	☐	☐	☐	☐
is creative in its workmanship	☐	☐	☐	☐	☐
has high quality in its workmanship	☐	☐	☐	☐	☐
has an image of advanced country	☐	☐	☐	☐	☐

9. Traditional London taxi: *

	Strongly Disagree	Disagree	Neutral	Agree	Strongly Agree
is part of British culture	☐	☐	☐	☐	☐
has a strong cultural meaning	☐	☐	☐	☐	☐
is a National Treasure	☐	☐	☐	☐	☐

10. Traditional London taxi: *

	Strongly Disagree	Disagree	Neutral	Agree	Strongly Agree
arrives at the destination on time	☐	☐	☐	☐	☐
is clean enough to travel with	☐	☐	☐	☐	☐
is safe to travel with	☐	☐	☐	☐	☐
is easy to get on and off	☐	☐	☐	☐	☐
represents London	☐	☐	☐	☐	☐
reminds me of London when I see it	☐	☐	☐	☐	☐
always makes me remember London when I see it	☐	☐	☐	☐	☐
Seen on London souvenirs, postcards, books, films... etc.	☐	☐	☐	☐	☐
makes London more unique	☐	☐	☐	☐	☐
helps London to differentiate from other cities	☐	☐	☐	☐	☐
makes London more distinctive	☐	☐	☐	☐	☐
makes London more attractive	☐	☐	☐	☐	☐

11. Please select your answer for the following statements. *

	Strongly Disagree	Disagree	Neutral	Agree	Strongly Agree
I know what London Taxi looks like	☐	☐	☐	☐	☐
I can recognize London Taxi among other competing taxis	☐	☐	☐	☐	☐
I am aware of London Taxi appearance	☐	☐	☐	☐	☐
My familiarity with the design of London Taxi is very high	☐	☐	☐	☐	☐

12. Traditional London taxi Design: *

	Strongly Disagree	Disagree	Neutral	Agree	Strongly Agree
survives times	☐	☐	☐	☐	☐
survives trends	☐	☐	☐	☐	☐
gives me pleasure	☐	☐	☐	☐	☐
is appealing to me because of its curves and lines	☐	☐	☐	☐	☐
is aesthetically pleasing	☐	☐	☐	☐	☐
looks better in black colour	☐	☐	☐	☐	☐

	Strongly Disagree	Disagree	Neutral	Agree	Strongly Agree
the interior design of it Taxi is appealing to me	☐	☐	☐	☐	☐

13. Traditional London taxis are designed: *

	Strongly Disagree	Disagree	Neutral	Agree	Strongly Agree
to easily get on and off	☐	☐	☐	☐	☐
accessible for elderly and disabled people	☐	☐	☐	☐	☐
comfortable enough to travel with	☐	☐	☐	☐	☐
fast enough for a taxi ride	☐	☐	☐	☐	☐

14. Traditional London taxi experience *

	Strongly Disagree	Disagree	Neutral	Agree	Strongly Agree
London Taxi makes strong impression on my visual sense and other senses.	☐	☐	☐	☐	☐
I find London Taxi interesting in a sensory way.	☐	☐	☐	☐	☐
The sound of London Taxi does not affect me.	☐	☐	☐	☐	☐
London Taxi triggers my sense of touch.	☐	☐	☐	☐	☐
I enjoy my travel when I ride a London Taxi.	☐	☐	☐	☐	☐
I feel happy when I use London Taxi to travel.	☐	☐	☐	☐	☐
Traveling with London Taxi puts me in a good mood.	☐	☐	☐	☐	☐
I have positive feelings when I use London Taxi.	☐	☐	☐	☐	☐

15. When I use Traditional London taxi I feel like: *

	Strongly Disagree	Disagree	Neutral	Agree	Strongly Agree
I am part of an exclusive community.	☐	☐	☐	☐	☐
I am part of London Community.	☐	☐	☐	☐	☐
I am part of London Taxi family.	☐	☐	☐	☐	☐
I don’t feel left alone.	☐	☐	☐	☐	☐

16. Traditional London taxi satisfaction. *

	Strongly Disagree	Disagree	Neutral	Agree	Strongly Agree
I am satisfied with my decision to use London Taxi.	☐	☐	☐	☐	☐
My choice to ride London Taxi was a wise one.	☐	☐	☐	☐	☐
I am very pleased with London Taxi.	☐	☐	☐	☐	☐
I think I did the right thing when I decided to ride a London Taxi.	☐	☐	☐	☐	☐
I am satisfied with London Taxi and its performance.	☐	☐	☐	☐	☐
I am completely satisfied with London Taxi.	☐	☐	☐	☐	☐

Thank you very much for your cooperation.
Your opinion are greatly appreciated

London taxi corporate heritage design elements A

1991 TX1 and 1948 FX3 together Transported by Design 2016. Photos by researcher

London taxi corporate heritage design elements B

Latest London black cab model, LEVC TX. Photos by researcher

Examples of traditional London taxi national role identity:

The first photo shows London black cabs used as British national symbol in 2012 London Olypmics closing ceremony. Photo: levc.com.

The second photo demonstates London black cab connection with British culture. Photo by researcher.

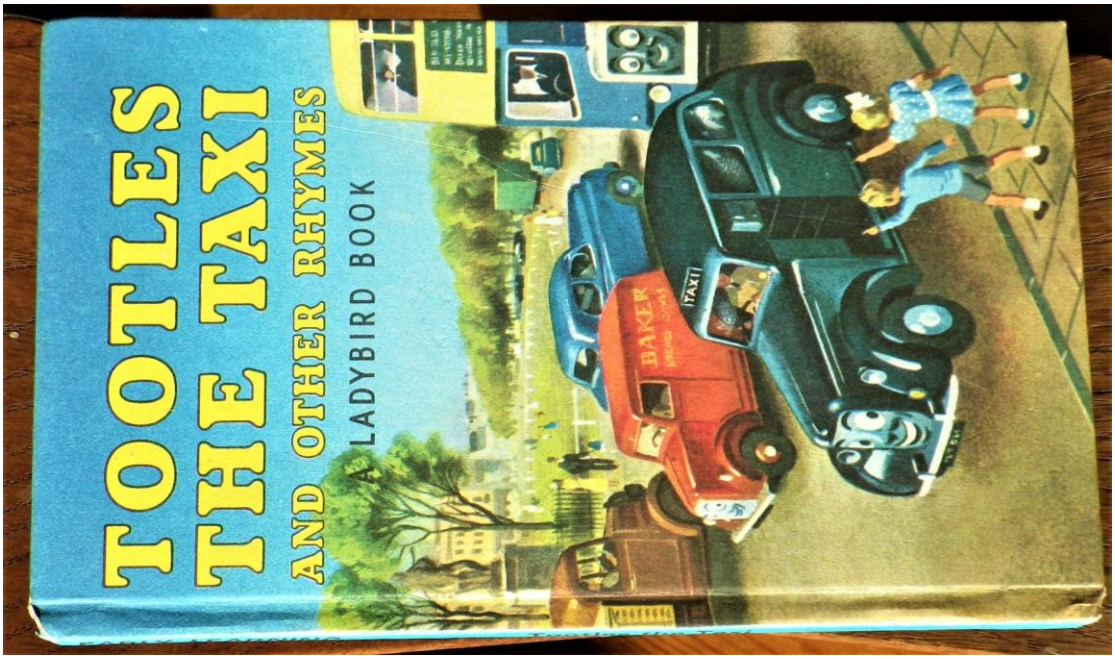

Participant Information Sheet

Dear Participant,

Welcome to the research survey on Traditional London taxi (also known as Traditional Black Cab). If you ever used a Traditional London taxi please fill out the survey.

What is the purpose of the research?

Before taking part of this study, please carefully read the following information. This research focuses on heritage design, customer perception, customer experience and satisfaction regarding Traditional London taxi. The tile of the research is "Heritage design, multiple corporate identities and customer behaviour: The case of London Taxi". The aim of the research is to understand the relations and associations between a heritage asset and culture, nation and city as well as their impact on customer behaviour. The study is conducted by PhD student Bedri M Ozdemir at Brunel University London Business School.

This survey was approved by the Brunel University London Research Ethics Committee. The survey takes 10 minute. Your participation is greatly appreciated. All answers will be treated in confidential and anonymous way in accordance with the law and university regulations.

Thank you! Have a great day.

Example of traditional London black cab city role identity:

Association of London black cab with the city is reflected on souvenirs. Photos by researcher.

Example of traditional London black cab city role identity:

Association of London black cab with London are shown on postcards. Photos by researcher

Structural Models

Structural Model 2

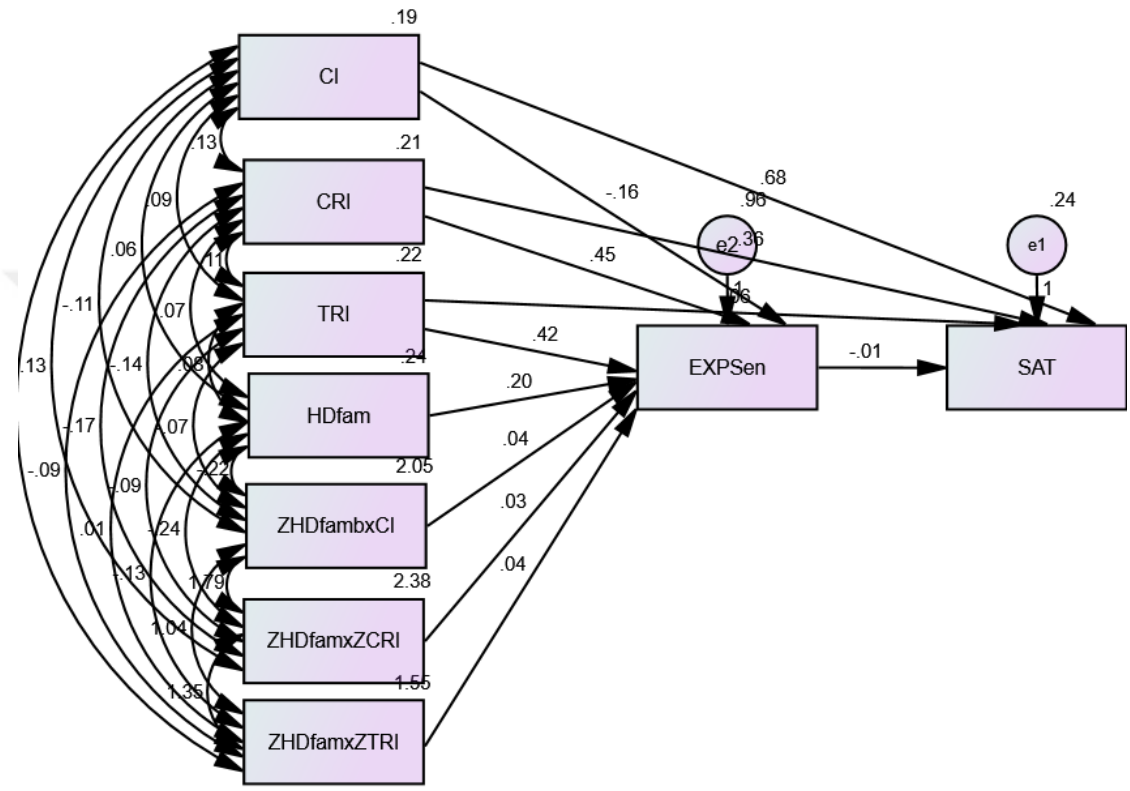

Structural Model 3

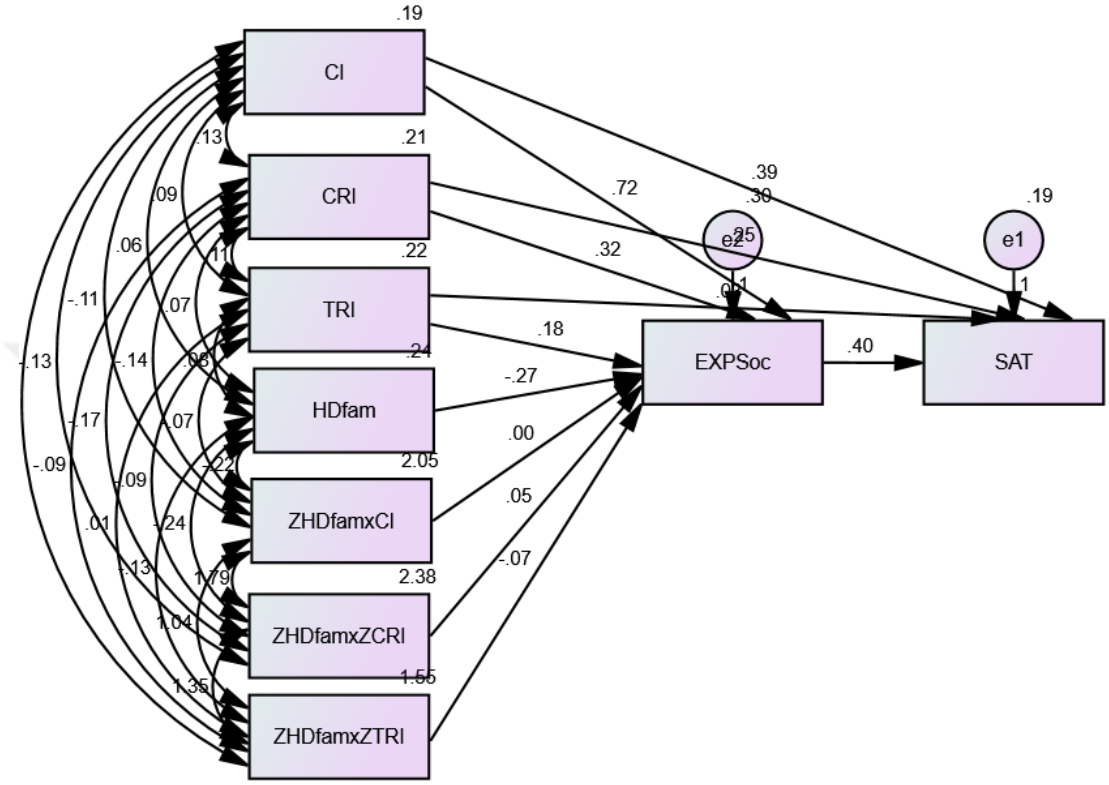

Structural Model 4

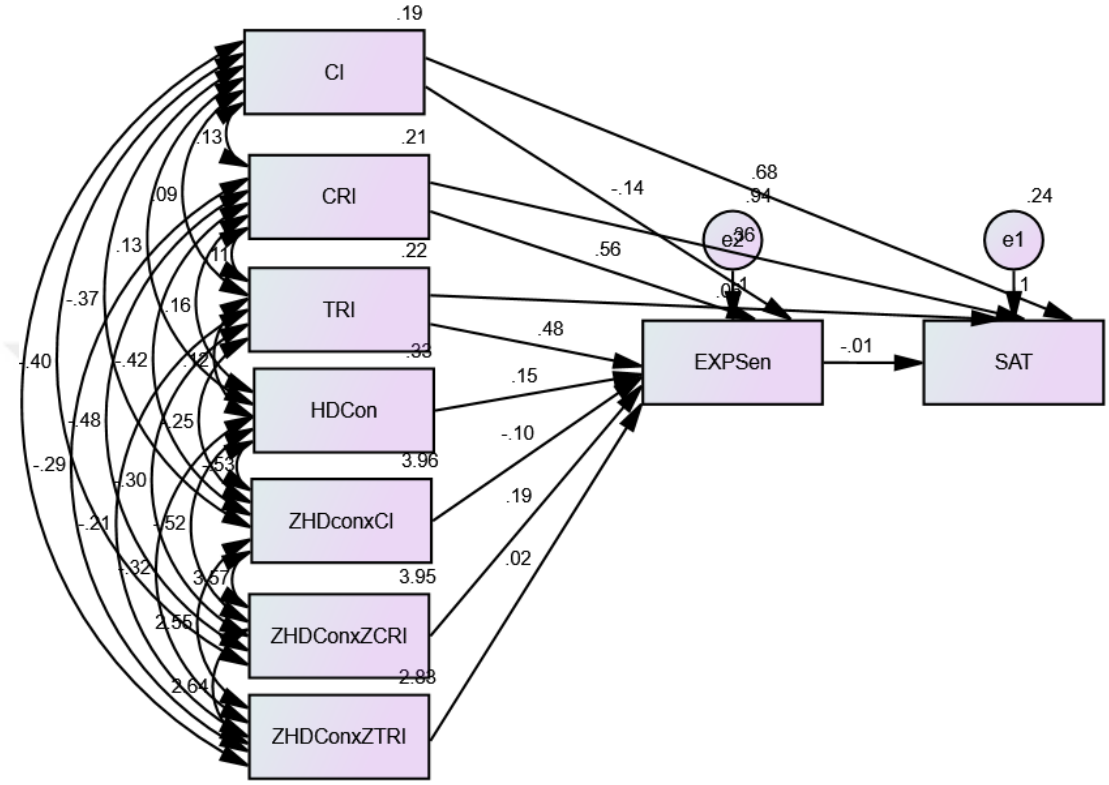

Structural Model 5

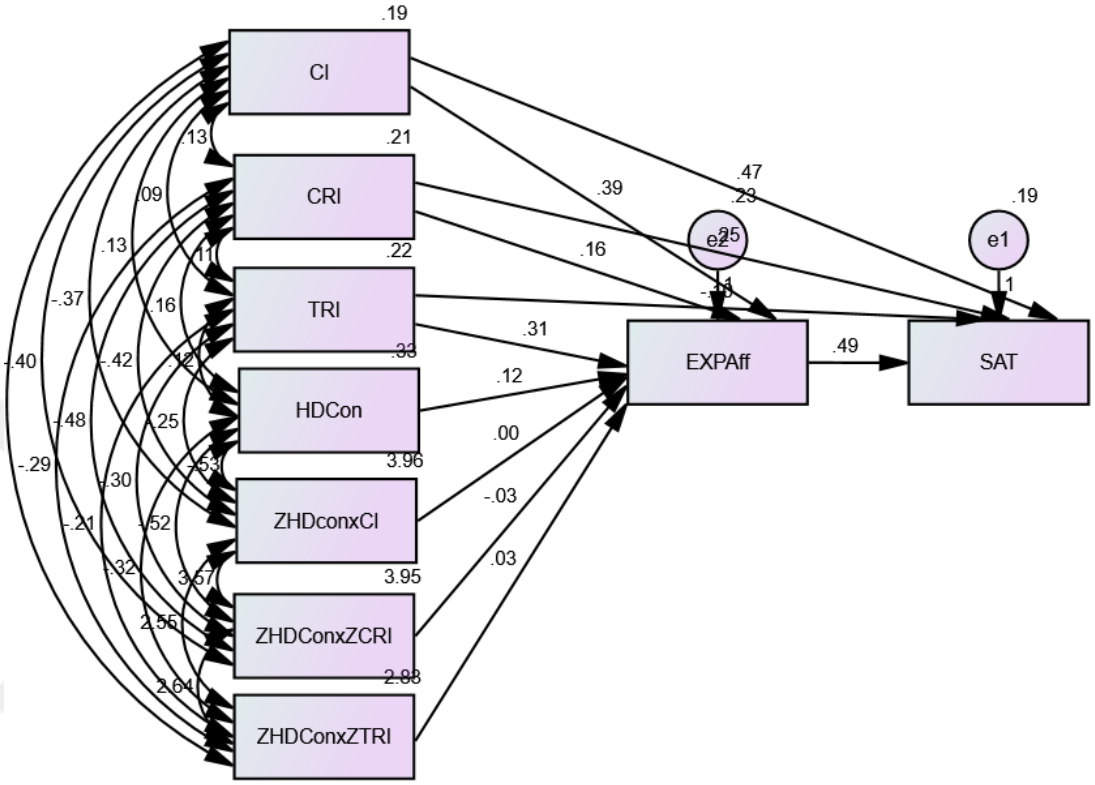

Structural Model 6

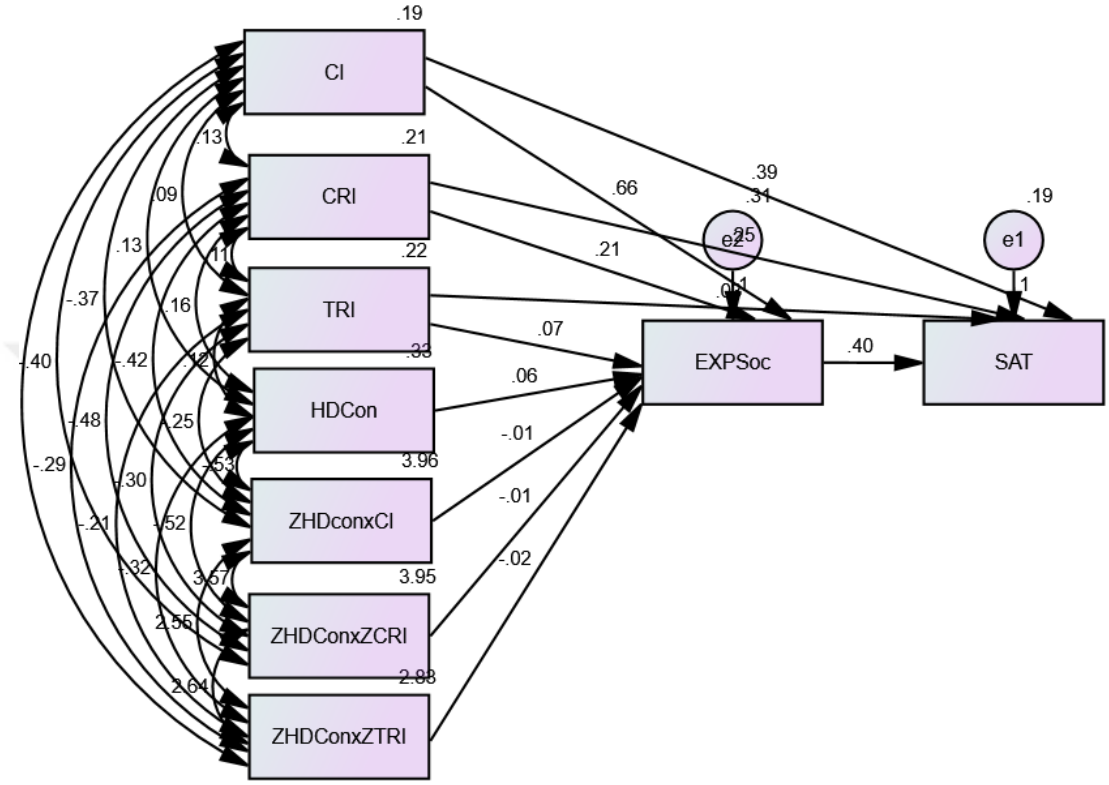

Structural Model 7

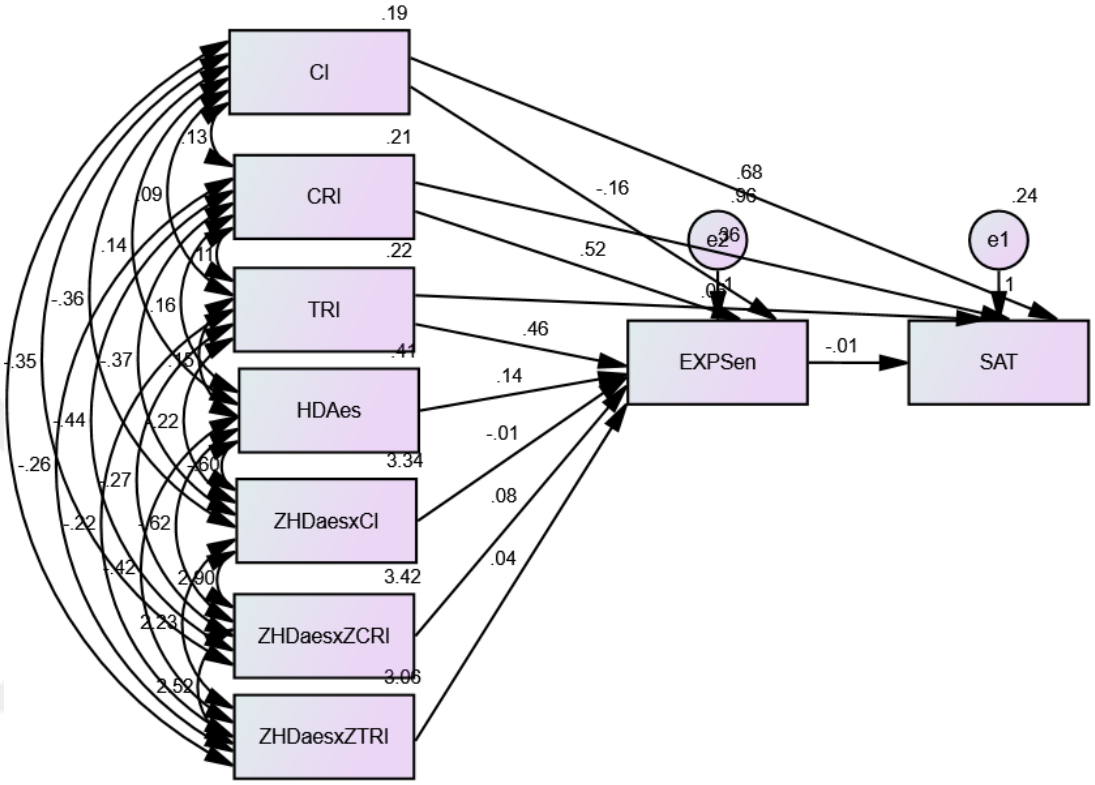

Structural Model 8

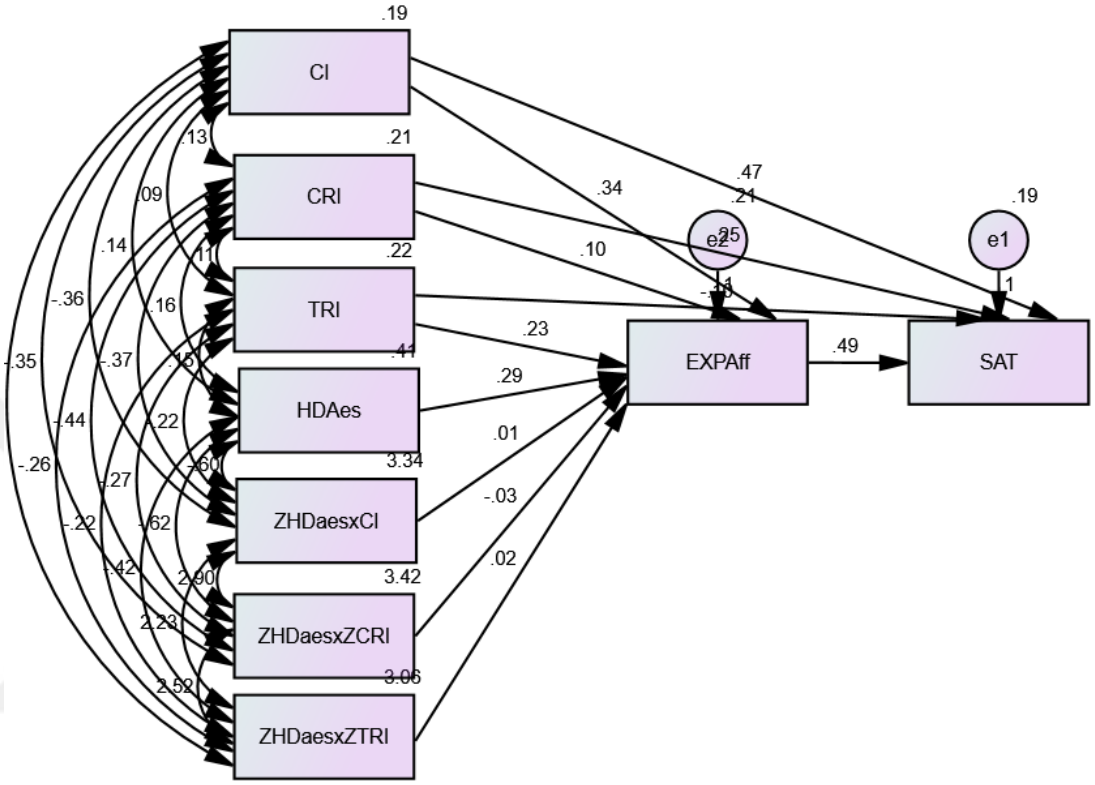

Structural Model 9

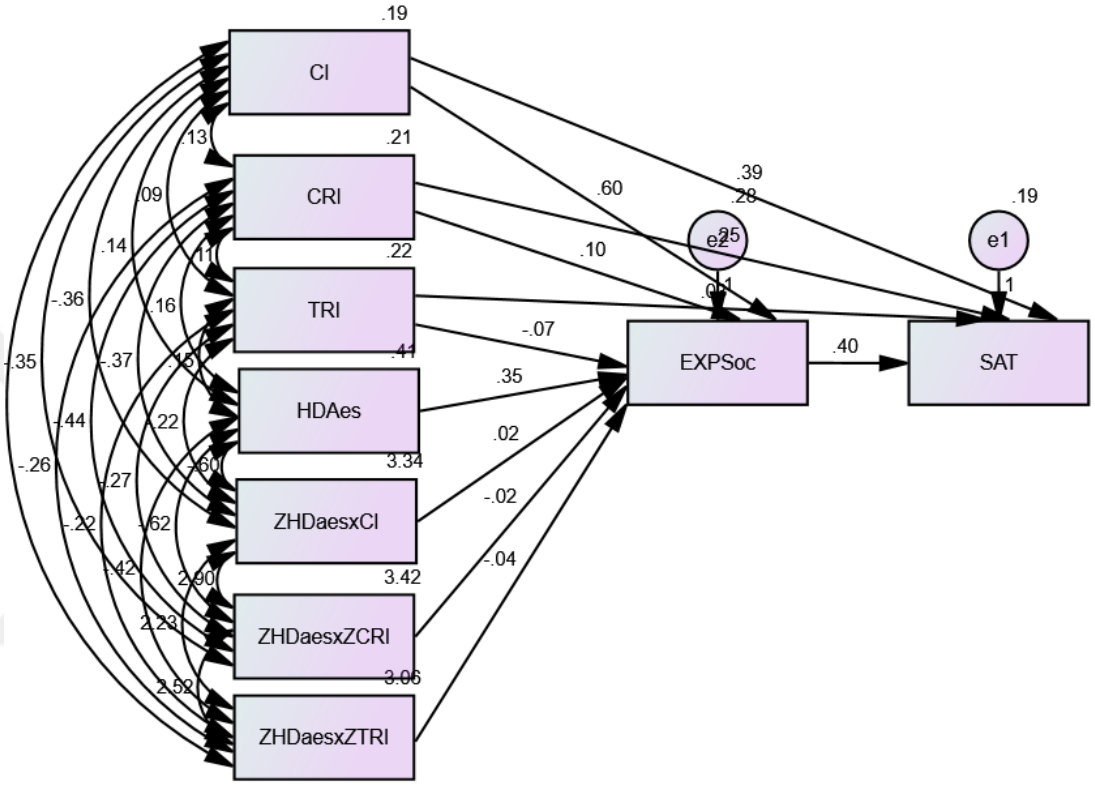

Structural Model 10

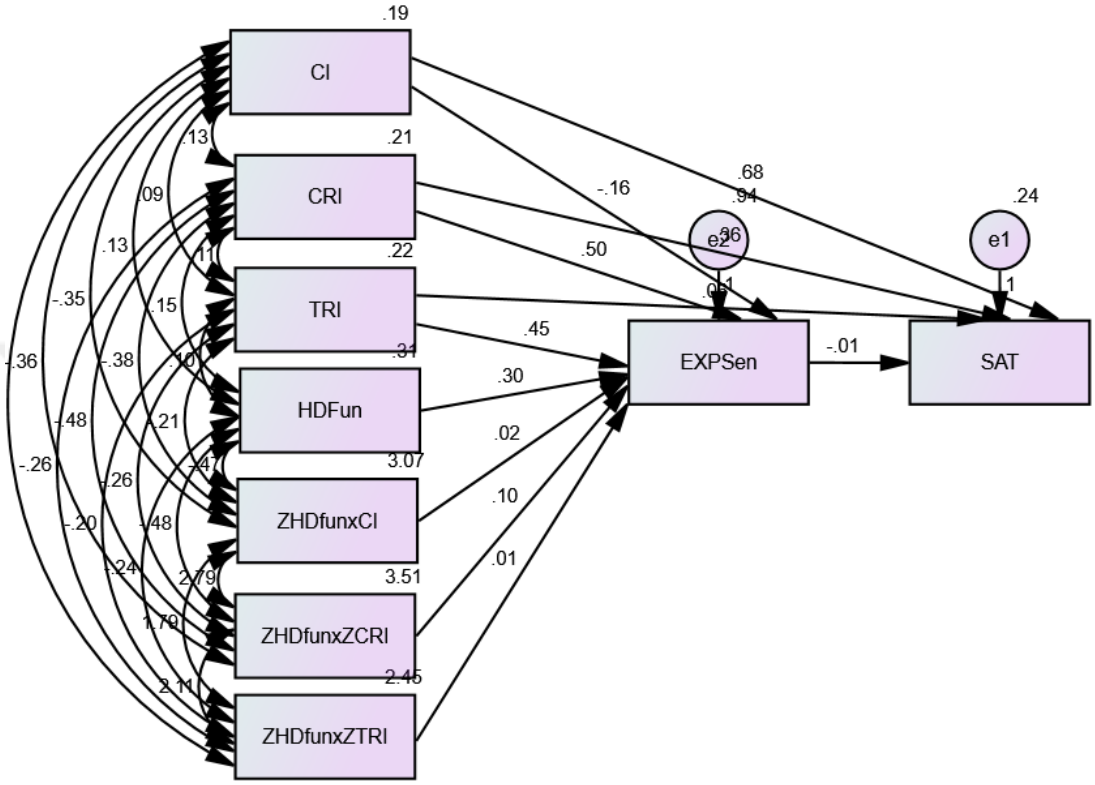

Structural Model 11

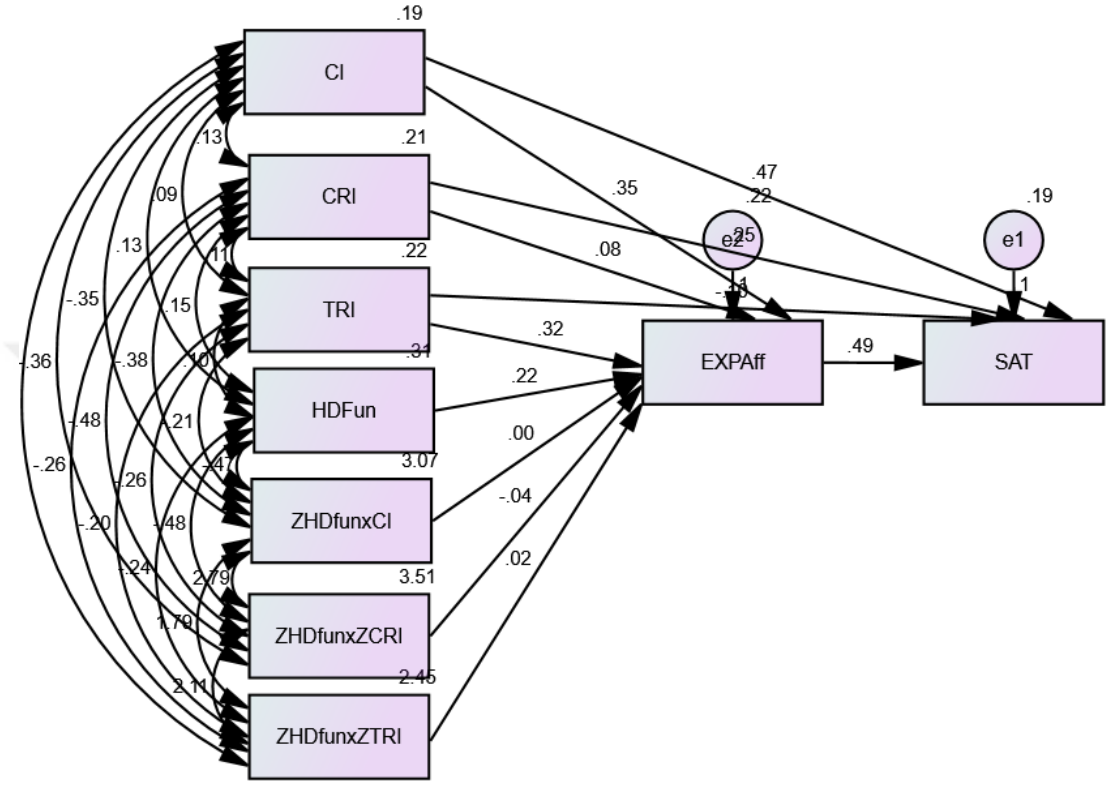
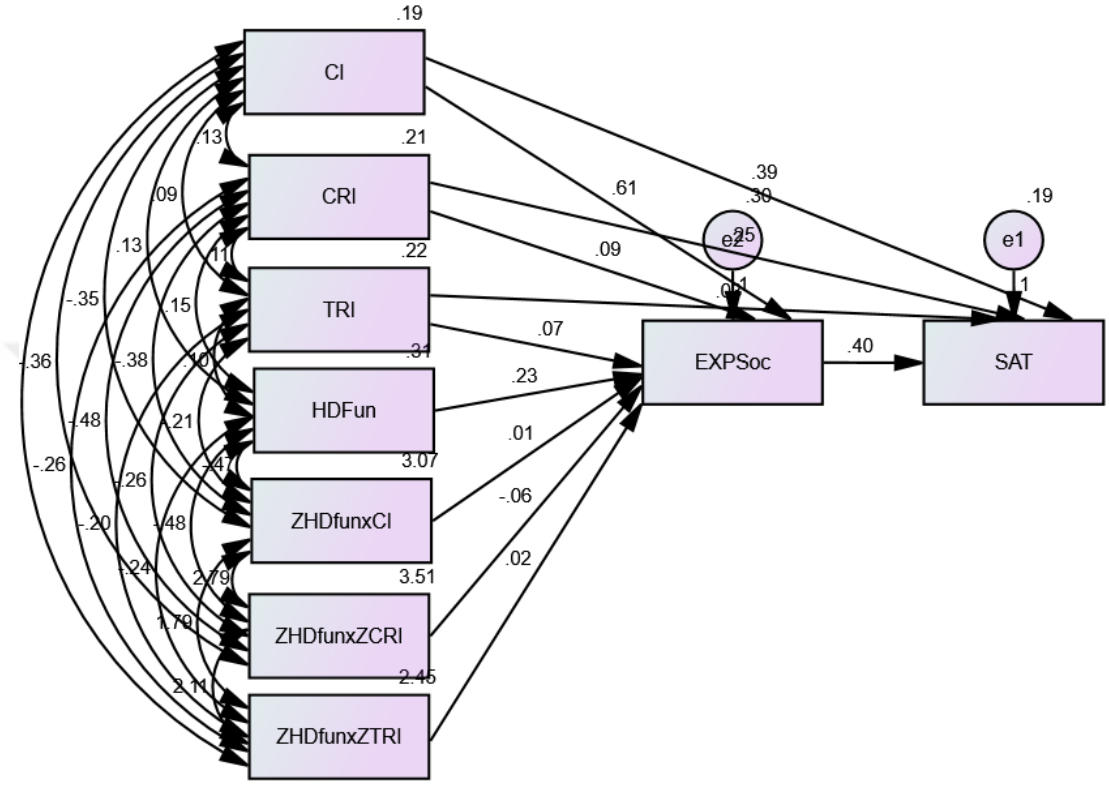
Structural Model 12